This is a digital copy of a book that was preserved for generations on library shelves before it was carefully scanned by Google as part of a project to make the world's books discoverable online.

It has survived long enough for the copyright to expire and the book to enter the public domain. A public domain book is one that was never subject to copyright or whose legal copyright term has expired. Whether a book is in the public domain may vary country to country. Public domain books are our gateways to the past, representing a wealth of history, culture and knowledge that's often difficult to discover.

Marks, notations and other marginalia present in the original volume will appear in this file - a reminder of this book's long journey from the publisher to a library and finally to you.

Usage guidelines

Google is proud to partner with libraries to digitize public domain materials and make them widely accessible. Public domain books belong to the public and we are merely their custodians. Nevertheless, this work is expensive, so in order to keep providing this resource, we have taken steps to prevent abuse by commercial parties, including placing technical restrictions on automated querying.

We also ask that you:

+ *Make non-commercial use of the files* We designed Google Book Search for use by individuals, and we request that you use these files for personal, non-commercial purposes.
+ *Refrain from automated querying* Do not send automated queries of any sort to Google's system: If you are conducting research on machine translation, optical character recognition or other areas where access to a large amount of text is helpful, please contact us. We encourage the use of public domain materials for these purposes and may be able to help.
+ *Maintain attribution* The Google "watermark" you see on each file is essential for informing people about this project and helping them find additional materials through Google Book Search. Please do not remove it.
+ *Keep it legal* Whatever your use, remember that you are responsible for ensuring that what you are doing is legal. Do not assume that just because we believe a book is in the public domain for users in the United States, that the work is also in the public domain for users in other countries. Whether a book is still in copyright varies from country to country, and we can't offer guidance on whether any specific use of any specific book is allowed. Please do not assume that a book's appearance in Google Book Search means it can be used in any manner anywhere in the world. Copyright infringement liability can be quite severe.

About Google Book Search

Google's mission is to organize the world's information and to make it universally accessible and useful. Google Book Search helps readers discover the world's books while helping authors and publishers reach new audiences. You can search through the full text of this book on the web at `http://books.google.com/`

RFA
BH
V.96
C.1

UNITED STATES REPORTS,

SUPREME COURT.

VOL. 96.

CASES

ARGUED AND ADJUDGED

IN

THE SUPREME COURT

OF

THE UNITED STATES.

OCTOBER TERM, 1877.

REPORTED BY

WILLIAM T. OTTO.

VOL. VI.

THE BANKS LAW PUBLISHING CO.
21 MURRAY STREET, NEW YORK
1903

Entered according to Act of Congress, in the year 1878, by
LITTLE, BROWN, AND COMPANY,
In the Office of the Librarian of Congress at Washington.

JUSTICES

OF THE

SUPREME COURT OF THE UNITED STATES

DURING THE TIME OF THESE REPORTS.

CHIEF JUSTICE.

HON. MORRISON R. WAITE.

ASSOCIATES.

HON. NATHAN CLIFFORD.
HON. SAMUEL F. MILLER.
HON. WILLIAM STRONG.
HON. WARD HUNT.
HON. NOAH H. SWAYNE.
HON. STEPHEN J. FIELD.
HON. JOSEPH P. BRADLEY.
HON. JOHN M. HARLAN.

ATTORNEY-GENERAL.

HON. CHARLES DEVENS.

SOLICITOR-GENERAL.

HON. SAMUEL FIELD PHILLIPS.

CLERK.

DANIEL WESLEY MIDDLETON, ESQUIRE.

ALLOTMENT, ETC., OF THE JUSTICES

OF THE

SUPREME COURT OF THE UNITED STATES,

As made April 22, 1878, under the Acts of Congress of July 23, 1866, and March 2, 1867.

NAME OF THE JUSTICE, AND STATE FROM WHENCE APPOINTED.	NUMBER AND TERRITORY OF THE CIRCUIT.	DATE OF COMMISSION, AND BY WHOM APPOINTED.
CHIEF JUSTICE.	FOURTH.	1874.
Hon. M. R. WAITE, Ohio.	Maryland, West Virginia, Virginia, N. Carolina, and S. Carolina.	Jan. 21. President Grant.
ASSOCIATES.	FIRST.	1858.
Hon. N. CLIFFORD, Maine.	Maine, New Hampshire, Massachusetts, and Rhode Island.	Jan. 12. President Buchanan.
	SECOND.	1872.
Hon. WARD HUNT, New York.	New York, Vermont, and Connecticut.	Dec. 11. President Grant.
	THIRD.	1870.
Hon. WM. STRONG, Pennsylvania.	Pennsylvania, New Jersey, and Delaware.	Feb. 18. President Grant.
	FIFTH.	1870.
Hon. J. P. BRADLEY, New Jersey.	Georgia, Florida, Alabama, Mississippi, Louisiana, and Texas.	March 21. President Grant.
	SIXTH.	1862.
Hon. N. H. SWAYNE, Ohio.	Ohio, Michigan, Kentucky, & Tennessee.	Jan. 24. President Lincoln.
	SEVENTH.	1877.
Hon. J. M. HARLAN, Kentucky.	Indiana, Illinois, and Wisconsin.	Nov. 29. President Hayes.
	EIGHTH.	1862.
Hon. S. F. MILLER, Iowa.	Minnesota, Iowa, Missouri, Kansas, Arkansas, & Nebraska.	July 16. President Lincoln.
	NINTH.	1863.
Hon. S. J. FIELD, California.	California, Oregon, and Nevada.	March 10. President Lincoln.

TABLE OF CASES.

Page

Ames *v.* Quimby 324
Arnson, Murphy *v.* 131
Arthur, Davies *v.* 148
v. Davies 135
v. Goddard 145
v. Herman 141
v. Homer 137
v. Lahey 112
v. Morrison 108
v. Rheims 143
v. Stephani 125
v. Sussfield 128
v. Unkart 118
v. Zimmerman 124
Atherton *v.* Fowler 513

Baird *v.* United States 430
Barnes, San Antonio *v.* 316
Bissell *v.* Heyward 580
Bissell, Meister *v.* 83
Brawley *v.* United States 168
Brine *v.* Insurance Company 627
Bruffy, Williams *v.* 176
Brune's Assignee, Insurance Company *v.* 588
Bugbey, Water and Mining Company *v.* 165
Burbank *v.* Conrad 291

Casey *v.* Cavaroc 467
Casey *v.* National Bank 492
Casey *v.* Schneider 496
Casey *v.* Schuchardt 494

Page
Cavaroc, Casey *v.* 467
Chandler, County Commissioners *v.* 205
Charleston, Jenkins *v.* 449
Charleston, Murray *v.* 432
Clark, United States *v.* 37
Clark, County of, United States *v.* 211
Collector, Railroad Company *v.* 594
Conrad, Burbank *v.* 291
Conrad *v.* Waples 279
Cornell, Schumacher *v.* 549
County of Clark, United States *v.* 211
County Commissioners *v.* Chandler 205
County of Ray *v.* Vansycle 675
County of Sac *v.* Cromwell 51
Cox, McPherson *v.* 404
Cromwell *v.* County of Sac 51

Davidson *v.* New Orleans 97
Davies, Arthur *v.* 135
Davies *v.* Arthur 148
Davis, Peugh *v.* 332
Dewing *v.* Perdicaries 193
Dial *v.* Reynolds 340
Dobbins's Distillery *v.* United States 395
Driscoll, United States *v.* 421
Duluth, Wisconsin *v.* 379
Duncan, Ketchum *v.* 659

Edrington, O'Reilly *v.* 724
Edwards *v.* Kearzey 595
Eggleston, Insurance Company *v.* 572
Ex parte Jackson 727
Ex parte Schollenberger 369

Felton *v.* United States 699
Ferguson *v.* McLaughlin 174
Fleming, McLean *v.* 245
Fowler, Atherton *v.* 513
Francis *v.* United States 354

Galveston, Hitchcock *v.* 341
Garfield *v.* Paris 557

Page
Goddard, Arthur *v.* 145
Gold-Mining Company *v.* National Bank 640
Gold-Washing and Water Company *v.* Keyes 199
Gossler, Insurance Company *v.* 645
Gregory *v.* Morris 619

Hawkins *v.* United States 689
Hays *v.* Ketchum 659
Hayward *v.* National Bank 611
Herman, Arthur *v.* 141
Heyward, Bissell *v.* 580
Hitchcock *v.* Galveston 341
Homer, Arthur *v.* 137
Huntington *v.* Savings Bank 388

Illinois, Turnpike Company *v.* 63
Insurance Company, Brine *v.* 627
v. Brune's Assignee 588
v. Eggleston 572
v. Gossler 645
v. McCain 84
v. Mowry 544
v. Norton 234

Jackson, *Ex parte* 727
Jenkins *v.* Charleston 449
Johnson, Walker *v.* 424
Jones *v.* United States 24

Kaufman, United States *v.* 567
Kearzey, Edwards *v.* 595
Ketchum *v.* Duncan 659
Ketchum, Hays *v.* 659
Keyes, Gold-Washing and Water Company *v.* 199
King *v.* Pardee 90
King, Werner *v.* 218
Kohlsaat *v.* Murphy 153
Kuhn, McAllister *v.* 87

"Lady Pike," The 461
Lahey, Arthur *v.* 112

Page
Maine, Railroad Company *v.* 499
McAllister *v.* Kuhn 87
McCain, Insurance Company *v.* 84
McCarthy, Railway Company *v.* 258
McGarrahan *v.* Mining Company 316
McLaughlin, Ferguson *v.* 174
McLean *v.* Fleming 245
McPherson *v.* Cox 404
Mehaffy, San Antonio *v.* 312
Meister *v.* Bissell 83
Meister *v.* Moore 76
Merchants' Bank *v.* United States 36
Mining Company, McGarrahan *v.* 316
Mitchell *v.* United States 162
Moore, Meister *v.* 76
Moore *v.* Robbins 530
Morgan *v.* Railroad Company 716
Morris, Gregory *v.* 619
Morrison, Arthur *v.* 108
Morrison, United States *v.* 232
Mowry, Insurance Company *v.* 544
Murphy *v.* Arnson 131
Murphy, Kohlsaat *v.* 153
Murray *v.* Charleston 432

National Bank, Casey *v.* 492
Gold-Mining Company *v.* 640
Hayward *v.* 611
v. Omaha 737
v. Warren 539
Wheeler *v.* 268
New Orleans, Davidson *v.* 97
Norton, Insurance Company *v.* 234

Omaha, National Bank *v.* 737
O'Reilly *v.* Edrington 724

Pardee, King *v.* 90
Paris, Garfield *v.* 557
Pensacola Telegraph Company *v.* Western Union Telegraph Company 1

Page
Perdicaries, Dewing *v.* 193
Peugh *v.* Davis 332
Pratt *v.* Pratt 704
Pullman *v.* Upton 328

Quimby, Ames *v.* 324

Railroad Company *v.* Collector 594
v. Maine 499
Morgan *v.* 716
v. Richmond 521
Sage *v.* 712
v. Vance 450
Railway Company *v.* McCarthy 258
Ray, County of, *v.* Vansycle 675
Reynolds, Dial *v.* 340
Rheims, Arthur *v.* 143
Richmond, Railroad Company *v.* 521
Robbins, Moore *v.* 530
Rock Creek, Township of, *v.* Strong 271

Sac, County of, Cromwell *v.* 51
Sage *v.* Railroad Company 712
San Antonio *v.* Barnes 316
San Antonio *v.* Mehaffy 312
Savings Bank, Huntington *v.* 388
Schneider, Casey *v.* 496
Schollenberger, *Ex parte* 369
Schuchardt, Casey *v.* 494
Schumacher *v.* Cornell 549
Simmons, United States *v.* 360
Sneed, Tennessee *v.* 69
State Bank, United States *v.* 30
Stephani, Arthur *v.* 125
Stix, Wolf *v.* 541
Strong, Township of Rock Creek *v.* 271
Sussfield, Arthur *v.* 128

Tennessee *v.* Sneed 69
The "Lady Pike" 461
Township of Rock Creek *v.* Strong 271
Turnpike Company *v.* Illinois 63

Page
United States, Baird *v.* 430
Brawley *v.* 168
v. Clark 37
v. County of Clark 211
Dobbins's Distillery *v.* 395
v. Driscoll 421
Felton *v.* 699
Francis *v.* 354
Hawkins *v.* 689
Jones *v.* 24
v. Kaufman 567
Merchants' Bank *v.* 86
Mitchell *v.* 162
v. Morrison 232
v. Simmons 360
v. State Bank 30
v. Van Auken 366
Unkart, Arthur *v.* 118
Upton, Pullman *v.* 328

Van Auken, United States *v.* 366
Vance, Railroad Company *v.* 450
Vansycle, County of Ray *v.* 675

Walker *v.* Johnson 424
Waples, Conrad *v.* 279
Warren, National Bank *v.* 539
Water and Mining Company *v.* Bugbey 165
Werner *v.* King 218
Western Union Telegraph Company, Pensacola Telegraph Company *v.* 1
Wheeler *v.* National Bank 268
Williams *v.* Bruffy 176
Wisconsin *v.* Duluth 379
Wolf *v.* Stix 541

Zimmerman, Arthur *v.* 121

REPORTS OF THE DECISIONS

OF THE

SUPREME COURT OF THE UNITED STATES,

OCTOBER TERM, 1877.

PENSACOLA TELEGRAPH COMPANY *v.* WESTERN UNION TELEGRAPH COMPANY.

1. The powers conferred upon Congress to regulate commerce with foreign nations and among the several States, and to establish post-offices and post-roads, are not confined to the instrumentalities of commerce, or of the postal service known or in use when the Constitution was adopted, but keep pace with the progress of the country, and adapt themselves to the new developments of time and circumstances.
2. They were intended for the government of the business to which they relate, at all times and under all circumstances; and it is not only the right, but the duty, of Congress to take care that intercourse among the States and the transmission of intelligence are not obstructed or unnecessarily encumbered by State legislation.
3. The act of Congress approved July 24, 1866 (14 Stat. 221, Rev. Stat., sect. 5263 *et seq.*), entitled "An Act to aid in the construction of telegraph lines, and to secure to the government the use of the same for postal, military, and other purposes," so far as it declares that the erection of telegraph lines shall, as against State interference, be free to all who accept its terms and conditions, and that a telegraph company of one State shall not, after accepting them, be excluded by another State from prosecuting its business within her jurisdiction, is a legitimate regulation of commercial intercourse among the States, and is appropriate legislation to execute the powers of Congress over the postal service.
4. Nor is it limited in its operation to such military and post roads as are upon the public domain.

5. The statute of Florida approved Dec. 11, 1866, so far as it grants to the Pensacola Telegraph Company the exclusive right of establishing and maintaining lines of electric telegraph as therein specified, is in conflict with that act, and therefore inoperative against a corporation of another State entitled to the privileges which that act confers.

6 Without deciding whether, in the absence of that act, the legislation of Florida of 1874 would have been sufficient to authorize a foreign corporation to construct and operate a telegraph line within the counties of Escambia and Santa Rosa in that State, the court holds that a telegraph company of another State, which has secured a right of way by private arrangement with the owner of the land, and duly accepted the restrictions and obligations required by that act, cannot be excluded by the Pensacola Telegraph Company.

APPEAL from the Circuit Court of the United States for the Northern District of Florida.

In 1859, an association of persons, known as the Pensacola Telegraph Company, erected a line of electric telegraph upon the right of way of the Alabama and Florida railroad, from Pensacola, in Florida, to Pollard, in Alabama, about six miles north of the Florida line. The company operated the whole line until 1862, when, upon the evacuation of Pensacola by the Confederate forces, the wire was taken down for twenty-three miles, and Cooper's Station made the southern terminus. In 1864, the whole was abandoned, as the section of the country in which it was situated had fallen into the possession of the United States troops.

On the 1st of December, 1865, the stockholders met; and it appearing that the assets of the company were insufficient to rebuild the line, a new association was formed for that purpose, with the old name, and new stock to the amount of $5,000 subscribed. A resolution was adopted by the new company to purchase the property of the old, at a valuation put upon it in a report submitted to the meeting, and a new board of directors was elected.

A meeting of the directors was held on the 2d of January, 1866, at which the president reported the completion of the line to Pensacola, and a resolution was adopted, authorizing the purchase of wire for its extension to the navy-yard. The attorneys of the company were also instructed to prepare a draft of a charter, to be presented to the legislature for enactment.

On the 24th of July, 1866, Congress passed the following act: —

"AN ACT to aid in the construction of telegraph lines, and to secure to the government the use of the same for postal, military, and other purposes.

"Be it enacted by the Senate and House of Representatives of the United States of America in Congress assembled, that any telegraph company now organized, or which may hereafter be organized, under the laws of any State in this Union, shall have the right to construct, maintain, and operate lines of telegraph through and over any portion of the public domain of the United States, over and along any of the military or post roads of the United States which have been or may hereafter be declared such by act of Congress, and over, under, or across the navigable streams or waters of the United States: *Provided*, that such lines of telegraph shall be so constructed and maintained as not to obstruct the navigation of such streams and waters, or interfere with the ordinary travel on such military or post roads. And any of said companies shall have the right to take and use from such public lands the necessary stone, timber, and other materials for its posts, piers, stations, and other needful uses in the construction, maintenance, and operation of said lines of telegraph, and may pre-empt and use such portion of the unoccupied public lands subject to pre-emption through which its said lines of telegraph may be located as may be necessary for its stations, not exceeding forty acres for each station; but such stations shall not be within fifteen miles of each other.

"SECT. 2. And be it further enacted, that telegraphic communications between the several departments of the government of the United States and their officers and agents shall, in their transmission over the lines of any of said companies, have priority over all other business, and shall be sent at rates to be annually fixed by the Postmaster-General.

"SECT. 3. And be it further enacted, that the rights and privileges hereby granted shall not be transferred by any company acting under this act to any other corporation, association, or person: *Provided, however*, that the United States may at any time after the expiration of five years from the date of the passage of this act, for postal, military, or other purposes, purchase all the telegraph lines, property, and effects of any or all of said companies at an appraised value, to be ascertained by five competent disinterested persons, two of whom shall be selected by the Postmaster-General

of the United States, two by the company interested, and one by the four so previously selected.

"SECT. 4. And be it further enacted, that before any telegraph company shall exercise any of the powers or privileges conferred by this act, such company shall file their written acceptance with the Postmaster-General, of the restrictions and obligations required by this act." 14 Stat. 221; Rev. Stat., sect. 5263 *et seq.*

All railroads in the United States are by law post-roads. Rev. Stat., sect. 3964; 17 Stat. 308, sect. 201.

On the 11th of December, 1866, the legislature of Florida passed an act incorporating the Pensacola Telegraph Company, and granting it "the sole and exclusive privilege and right of establishing and maintaining lines of electric telegraph in the counties of Escambia and Santa Rosa, either from different points within said counties, or connecting with lines coming into said counties, or either of them, from any point in this [Florida] or any other State." The capital stock was fixed at $5,000, with the privilege of increasing it to such an amount as might be considered necessary. The company was authorized to locate and construct its lines within the counties named, "along and upon any public road or highway, or across any water, or upon any railroad or private property for which permission shall first have been obtained from the proprietors thereof." In this act all the stockholders of the new association which had rebuilt the line were named as corporators. No meeting of the directors was held until Jan. 2, 1868, when the secretary was instructed to notify the stockholders "that the charter drawn up by Messrs. Campbell & Perry, attorneys, as per order of board, Jan. 2, 1866," had been passed.

On the 5th of June, 1867, the directors of the defendant, the Western Union Telegraph Company, a New York corporation, passed the following resolution, which was duly filed with the Postmaster-General: —

"*Resolved*, that this company does hereby accept the provisions of the act of Congress, entitled 'An Act to aid in the construction of telegraph lines, and to secure to the government the use of the same for postal, military, and other purposes,' approved July 24, 1866, with all the powers, privileges, restrictions, and obligations conferred and required thereby; and that the secretary be, and he

is hereby, authorized and directed to file this resolution with the Postmaster-General of the United States, duly attested by the signature of the acting president of the company and the seal of the corporation, in compliance with the fourth section of said act of Congress."

In 1872, the property of the Alabama and Florida Railroad Company, including its right of way and railroad, was transferred to the Pensacola and Louisville Railroad Company; and on the 14th of February, 1873, the legislature of Florida passed an act, which, as amended Feb. 18, 1874, authorized the last-named company "to construct, maintain, and operate a telegraph line from the Bay of Pensacola along the line of the said (its) road as now located, or as it may hereafter be located, and along connecting roads in said county to the boundary lines of the State of Alabama, and the said lines may connect and be consolidated with other telegraph companies within or without the State, and said company may pledge, mortgage, lease, sell, assign, and convey the property appertaining to the said telegraph lines, and the rights, privileges, and franchises conferred by this act, with full power in such assignees to construct, own, and operate such telegraph lines, and enjoy all the privileges, rights, and franchises conferred by this act; but in such case the said railroad company shall be responsible for the proper performance of the duties and obligations imposed by this act."

This was within the territory embraced by the exclusive grant to the Pensacola Telegraph Company.

On the 24th of June, 1874, the Pensacola and Louisville Railroad Company granted to the Western Union Telegraph Company the right to erect a telegraph line upon its right of way, and also the rights and privileges conferred by the acts of February, 1873 and 1874. The Western Union Company immediately commenced the erection of the line; but before its completion, to wit, July 27, 1874, the bill in this case was filed by the Pensacola Telegraph Company to enjoin the work and the use of the line, on account of the alleged exclusive right of that company under its charter. Upon the hearing, a decree was passed dismissing the bill, and this appeal was taken.

Mr. Charles W. Jones, for the appellant.

Except when prohibited or restricted by the provisions of the State Constitution, the legislature can grant exclusive privileges and franchises within its own jurisdiction. Cooley, Const. Lim. 281; *Gibbons* v. *Ogden*, 9 Wheat. 1; *West River Bridge Co.* v. *Dix et al.*, 6 How. 507; s. c. 16 Vt. 446; *The Binghamton Bridge*, 8 Wall. 51; *Shorter* v. *Smith*, 9 Ga. 529; *The Proprietors of the Piscataqua Bridge* v. *The New Hampshire Bridge et al.*, 7 N. H. 35; *Boston Water Power Co.* v. *Boston & Lowell Railroad Corporation et al.*, 23 Pick. (Mass.) 360; *Boston & Lowell Railroad Corporation* v. *Salem & Lowell Railroad Co. et al.*, 2 Gray (Mass.), 1; *California Telegraph Co.* v. *The Atlantic Telegraph Co.*, 22 Cal. 398; *Hazen et al.* v. *The Union Bank of Tennessee*, 1 Sneed (Tenn.), 115; *The People* v. *Bowen*, 30 Barb. (N. Y.) 24; *Livingston* v. *Van Ingen et al.*, 9 Johns. (N. Y.) 506; *Ogden* v. *Gibbons*, 4 Johns. (N. Y.) Ch. 150.

In Florida there were no such restrictions or prohibitions. On the contrary, by the express terms of sect. 3, art. 15, of her Constitution, the special statute of Dec. 11, 1866, incorporating the appellant and granting the exclusive privileges which are asserted in this suit, is valid.

That statute is not referred to in that of Feb. 14, 1873, or the amendatory act of 1874, and is, therefore, not repealed by a general repealing clause. *Crane* v. *Rider*, 22 Mich. 322; *State* v. *Mills*, 34 N. J. L. 177; *State* v. *Brannin*, 2 Zab. (N. J.) 485; *Fostick* v. *Perrysburg*, 14 Ohio St. 474.

The said statute of Dec. 11 is, however, a contract with the State, which cannot be impaired or modified without the company's consent. A subsequent statute interfering with that contract, or the rights thereunder vested, is inoperative and void. *Trustees of Dartmouth College* v. *Woodward*, 4 Wheat. 518; *State Bank of Ohio* v. *Knoop*, 16 How. 369; *Dodge* v. *Woolsey*, 18 id. 331; *Jefferson Branch Bank* v. *Skelly*, 1 Black, 436; *Franklin Branch Bank* v. *The State of Ohio*, id. 74; *The Binghamton Bridge*, *supra*; *Farrington* v. *Tennessee*, 95 U. S. 679.

The appellee is a New York corporation; and, in the absence of any legislation of Florida empowering it to exercise its corporate franchises in the latter State, can set up nothing in conflict with the exclusive rights of the appellant under its charter.

It has no existence or rights beyond the limits of the State which created it, except by the comity or the enabling acts of other States. *The Bank of Augusta* v. *Earle*, 15 Pet. 519; *Ohio & Mississippi Railroad Co.* v. *Wheeler*, 1 Black, 286; *Paul* v. *Virginia*, 8 Wall. 168; *Liverpool Insurance Co.* v. *Massachusetts*, 10 id. 566; *Railroad Company* v. *Harris*, 12 id. 65.

The act of 1874, under which the appellee claims by assignment from the Louisville & Pensacola Railroad Company, must be construed with reference to this settled principle. The assignment was not effectual to transfer any franchise, because the assignee was, in this instance, incompetent to take.

The act of Congress of July 24, 1866, has no bearing upon the case. It is in substantially the same terms as that of Aug. 4, 1852, 10 Stat. 28, which grants to any railroad, plank-road, or turnpike company the right of way through the public lands, and the right to take therefrom earth, stone, or wood, for the purpose of construction, and to select sites for depots and workshops. It extends, on certain conditions, efficient aid to any telegraph company whose authorized lines are to be established over the public domain. If it can be construed as conferring upon a corporation of one State the right in another State to do certain acts and enjoy certain privileges in connection with that domain, the indispensable condition is necessarily implied, that, by an enabling statute of such other State, the requisite capacity to do the acts or enjoy the privileges within her limits has been, or will be, bestowed on the corporation. It does not, *proprio vigore*, enlarge the corporate powers of any company, or authorize it to exercise them in a foreign jurisdiction. If it attempted to do so, it would, to that extent, be clearly void, as an assumption of a power which has been wisely and to the fullest extent lodged with the respective States.

But if the appellee was a Florida corporation, clothed with undisputed authority to establish and work its lines within the county of Escambia, the act would give her — what is not here in issue — a right of way only over the public domain. Congress did not possess, and could not grant, more. The United States acquires no proprietary interest in any railroad by declaring it a post-road. *Dickey* v. *Maysville & Lexington Turnpike Road Co.*, 7 Dana (Ky.), 113. The only objects thereby

attained or sought are the security of the mail and the protection of the postal service.

Mr. Perry Belmont, contra.

Telegraphing, as practised by the respondent, is a part of that intercourse which constitutes commerce.

Restrictions upon the free right to erect and maintain telegraph lines operate to regulate that intercourse.

Such restrictions, when imposed by State authority, are void, as contravening the Constitution of the United States.

The act of the legislature of Florida, approved Dec. 11, 1866, relied on by the appellant, not only trespasses upon the domain of Congress, but assumes to forbid what that body has authorized.

The question concerning the power of Congress to enable a corporation to exercise its franchises in a State other than that which created it, is not necessarily involved in determining the rights of the parties. The appellee is exercising certain franchises which the Pensacola and Louisville Railroad Company, pursuant to a statute of Florida, transferred to it by an assignment, which, except within the territory in question, it must be conceded, was as valid and effectual in vesting them as if they had been immediately derived from a legislative grant. The landed proprietors have granted to it the right of occupancy. It is, therefore, lawfully in that State, and has established connections there with its lines coming from other States. The case, therefore, turns upon the single point, whether, after complying with the conditions and regulations imposed by Congress, such a company so carrying on a commercial business may, with all its foreign and internal connections, be excluded, at the instance of another corporation, from certain portions of the State.

MR. CHIEF JUSTICE WAITE delivered the opinion of the court.

Congress has power "to regulate commerce with foreign nations and among the several States" (Const. art. 1, sect. 8, par. 3); and "to establish post-offices and post-roads" (id., par. 7). The Constitution of the United States and the laws made in pursuance thereof are the supreme law of the land. Art. 6, par. 2.

A law of Congress made in pursuance of the Constitution suspends or overrides all State statutes with which it is in conflict.

Since the case of *Gibbons* v. *Ogden* (9 Wheat. 1), it has never been doubted that commercial intercourse is an element of commerce which comes within the regulating power of Congress. Post-offices and post-roads are established to facilitate the transmission of intelligence. Both commerce and the postal service are placed within the power of Congress, because, being national in their operation, they should be under the protecting care of the national government.

The powers thus granted are not confined to the instrumentalities of commerce, or the postal service known or in use when the Constitution was adopted, but they keep pace with the progress of the country, and adapt themselves to the new developments of time and circumstances. They extend from the horse with its rider to the stage-coach, from the sailing-vessel to the steamboat, from the coach and the steamboat to the railroad, and from the railroad to the telegraph, as these new agencies are successively brought into use to meet the demands of increasing population and wealth. They were intended for the government of the business to which they relate, at all times and under all circumstances. As they were intrusted to the general government for the good of the nation, it is not only the right, but the duty, of Congress to see to it that intercourse among the States and the transmission of intelligence are not obstructed or unnecessarily encumbered by State legislation.

The electric telegraph marks an epoch in the progress of time. In a little more than a quarter of a century it has changed the habits of business, and become one of the necessities of commerce. It is indispensable as a means of inter-communication, but especially is it so in commercial transactions. The statistics of the business before the recent reduction in rates show that more than eighty per cent of all the messages sent by telegraph related to commerce. Goods are sold and money paid upon telegraphic orders. Contracts are made by telegraphic correspondence, cargoes secured, and the movement of ships directed. The telegraphic announcement of the markets abroad regulates prices at home, and a prudent mer-

chant rarely enters upon an important transaction without using the telegraph freely to secure information.

It is not only important to the people, but to the government. By means of it the heads of the departments in Washington are kept in close communication with all their various agencies at home and abroad, and can know at almost any hour, by inquiry, what is transpiring anywhere that affects the interest they have in charge. Under such circumstances, it cannot for a moment be doubted that this powerful agency of commerce and intercommunication comes within the controlling power of Congress, certainly as against hostile State legislation. In fact, from the beginning, it seems to have been assumed that Congress might aid in developing the system; for the first telegraph line of any considerable extent ever erected was built between Washington and Baltimore, only a little more than thirty years ago, with money appropriated by Congress for that purpose (5 Stat. 618); and large donations of land and money have since been made to aid in the construction of other lines (12 id. 489, 772; 13 id. 365; 14 id. 292). It is not necessary now to inquire whether Congress may assume the telegraph as part of the postal service, and exclude all others from its use. The present case is satisfied, if we find that Congress has power, by appropriate legislation, to prevent the States from placing obstructions in the way of its usefulness.

The government of the United States, within the scope of its powers, operates upon every foot of territory under its jurisdiction. It legislates for the whole nation, and is not embarrassed by State lines. Its peculiar duty is to protect one part of the country from encroachments by another upon the national rights which belong to all.

The State of Florida has attempted to confer upon a single corporation the exclusive right of transmitting intelligence by telegraph over a certain portion of its territory. This embraces the two westernmost counties of the State, and extends from Alabama to the Gulf. No telegraph line can cross the State from east to west, or from north to south, within these counties, except it passes over this territory. Within it is situated an important seaport, at which business centres, and with which those engaged in commercial pursuits have occasion more or less

to communicate. The United States have there also the necessary machinery of the national government. They have a navy-yard, forts, custom-houses, courts, post-offices, and the appropriate officers for the enforcement of the laws. The legislation of Florida, if sustained, excludes all commercial intercourse by telegraph between the citizens of the other States and those residing upon this territory, except by the employment of this corporation. The United States cannot communicate with their own officers by telegraph except in the same way. The State, therefore, clearly has attempted to regulate commercial intercourse between its citizens and those of other States, and to control the transmission of all telegraphic correspondence within its own jurisdiction.

It is unnecessary to decide how far this might have been done if Congress had not acted upon the same subject, for it has acted. The statute of July 24, 1866, in effect, amounts to a prohibition of all State monopolies in this particular. It substantially declares, in the interest of commerce and the convenient transmission of intelligence from place to place by the government of the United States and its citizens, that the erection of telegraph lines shall, so far as State interference is concerned, be free to all who will submit to the conditions imposed by Congress, and that corporations organized under the laws of one State for constructing and operating telegraph lines shall not be excluded by another from prosecuting their business within its jurisdiction, if they accept the terms proposed by the national government for this national privilege. To this extent, certainly, the statute is a legitimate regulation of commercial intercourse among the States, and is appropriate legislation to carry into execution the powers of Congress over the postal service. It gives no foreign corporation the right to enter upon private property without the consent of the owner and erect the necessary structures for its business; but it does provide, that, whenever the consent of the owner is obtained, no State legislation shall prevent the occupation of post-roads for telegraph purposes by such corporations as are willing to avail themselves of its privileges.

It is insisted, however, that the statute extends only to such military and post roads as are upon the public domain; but this

we think, is not so. The language is, "Through and over any portion of the public domain of the United States, over and along any of the military or post roads of the United States which have been or may hereafter be declared such by act of Congress, and over, under, or across the navigable streams or waters of the United States." There is nothing to indicate an intention of limiting the effect of the words employed, and they are, therefore, to be given their natural and ordinary signification. Read in this way, the grant evidently extends to the public domain, the military and post roads, and the navigable waters of the United States. These are all within the dominion of the national government to the extent of the national powers, and are, therefore, subject to legitimate congressional regulation. No question arises as to the authority of Congress to provide for the appropriation of private property to the uses of the telegraph, for no such attempt has been made. The use of public property alone is granted. If private property is required, it must, so far as the present legislation is concerned, be obtained by private arrangement with its owner. No compulsory proceedings are authorized. State sovereignty under the Constitution is not interfered with. Only national privileges are granted.

The State law in question, so far as it confers exclusive rights upon the Pensacola Company, is certainly in conflict with this legislation of Congress. To that extent it is, therefore, inoperative as against a corporation of another State entitled to the privileges of the act of Congress. Such being the case, the charter of the Pensacola Company does not exclude the Western Union Company from the occupancy of the right of way of the Pensacola and Louisville Railroad Company under the arrangement made for that purpose.

We are aware that, in *Paul* v. *Virginia* (8 Wall. 168), this court decided that a State might exclude a corporation of another State from its jurisdiction, and that corporations are not within the clause of the Constitution which declares that "the citizens of each State shall be entitled to all privileges and immunities of citizens in the several States." Art. 4, sect. 2. That was not, however, the case of a corporation engaged in inter-state commerce; and enough was said by the court to show,

that, if it had been, very different questions would have been presented. The language of the opinion is: "It is undoubtedly true, as stated by counsel, that the power conferred upon Congress to regulate commerce includes as well commerce carried on by corporations as commerce carried on by individuals. . . . This state of facts forbids the supposition that it was intended in the grant of power to Congress to exclude from its control the commerce of corporations. The language of the grant makes no reference to the instrumentalities by which commerce may be carried on: it is general, and includes alike commerce by individuals, partnerships, associations, and corporations. . . . The defect of the argument lies in the character of their (insurance companies) business. Issuing a policy of insurance is not a transaction of commerce. . . . Such contracts (policies of insurance) are not inter-state transactions, though the parties are domiciled in different States."

The questions thus suggested need not be considered now, because no prohibitory legislation is relied upon, except that which, as has already been seen, is inoperative. Upon principles of comity, the corporations of one State are permitted to do business in another, unless it conflicts with the law, or unjustly interferes with the rights of the citizens of the State into which they come. Under such circumstances, no citizen of a State can enjoin a foreign corporation from pursuing its business. Until the State acts in its sovereign capacity, individual citizens cannot complain. The State must determine for itself when the public good requires that its implied assent to the admission shall be withdrawn. Here, so far from withdrawing its assent, the State, by its legislation of 1874, in effect, invited foreign telegraph corporations to come in. Whether that legislation, in the absence of congressional action, would have been sufficient to authorize a foreign corporation to construct and operate a line within the two counties named, we need not decide; but we are clearly of the opinion, that, with such action and a right of way secured by private arrangement with the owner of the land, this defendant corporation cannot be excluded by the present complainant.

Decree affirmed.

MR. JUSTICE FIELD and MR. JUSTICE HUNT dissented.

MR. JUSTICE FIELD. I am compelled to dissent from the judgment of the court in this case, and from the reasons upon which it is founded; and I will state with as much brevity as possible the grounds of my dissent.

The bill was filed to obtain an injunction restraining the defendant from erecting, using, or maintaining a telegraph line in the county of Escambia, Florida, on the ground that, by a statute of the State passed in December, 1866, the complainant had acquired the exclusive right to erect and use lines of telegraph in that county for the period of twenty years. The court below denied the injunction and dismissed the bill, upon the ground that the statute was in conflict with the act of Congress of July 24, 1866, entitled "An Act to aid in the construction of telegraph lines, and to secure to the government the use of the same for postal, military, and other purposes." 14 Stat. 221.

The statute of Florida incorporated the Pensacola Telegraph Company, which had been organized in December of the previous year, and in terms declared that it should enjoy "the sole and exclusive privilege and right of establishing and maintaining lines of electric telegraph in the counties of Escambia and Santa Rosa, either from different points within said counties, or connecting with lines coming into said counties, or either of them, from other points in this or any other State."

Soon after its organization, and in 1866, the company erected a line of telegraph from the city of Pensacola, through the county of Escambia, to the southern boundary of Alabama, a distance of forty-seven miles, which has since been open and in continuous operation. It was located, by permission of the Alabama and Florida Railroad Company, along its line of railway. After the charter was obtained, the line was substantially rebuilt, and two other lines in the county were erected by the company.

In February, 1873, the legislature of Florida passed an act granting to the Pensacola and Louisville Railroad Company, which had become the assignee of the Alabama and Florida Railroad Company, the right to construct and operate telegraph

lines upon its right of way from the Bay of Pensacola to the junction of its road with the Mobile and Montgomery Railroad, and to connect the same with the lines of other companies. By an amendatory act passed in the following year (February, 1874), the railroad company was authorized to construct and operate the lines, not only along its road as then located, but as it might be thereafter located, and along connecting roads in the county, to the boundary of Alabama, and to connect and consolidate them with other telegraph companies, and to sell and assign the property appertaining to them, and the rights, privileges, and franchises conferred by the act; and it empowered the assignee, in such case, to construct and operate the lines, and to enjoy these rights, privileges, and franchises.

Under this amendatory act, and soon after its passage, the railroad company assigned the rights, privileges, and franchises thus acquired to the Western Union Telegraph Company, the defendant herein, a corporation created under the laws of the State of New York; which at once proceeded to erect a line from the city of Pensacola to the southern boundary of Alabama, along the identical railway on which the complainant's line was erected in 1866, and has been located ever since, with the avowed intention of using it to transmit for compensation messages for the public in the county and State. By the erection and operation of this line, the complainant alleges that its property would become valueless, and that it would lose the benefits of the franchises conferred by its charter.

There can be no serious question that the State of Florida possessed the absolute right to confer upon a corporation created by it the exclusive privilege for a limited period to construct and operate a telegraph line within its borders. Its Constitution, in existence at the time, empowered the legislature to grant exclusive privileges and franchises to private corporations for a period not exceeding twenty years. The exclusiveness of a privilege often constitutes the only inducement for undertakings holding out little prospect of immediate returns. The uncertainty of the results of an enterprise will often deter capitalists, naturally cautious and distrustful, from making an investment, without some assurance that, in case the business become profitable, they shall not encounter the danger of its

destruction or diminution by competition. It has, therefore, been a common practice in all the States to encourage enterprises having for their object the promotion of the public good, such as the construction of bridges, turnpikes, railroads, and canals, by granting for limited periods exclusive privileges in connection with them. Such grants, so far from being deemed encroachments upon any rights or powers of the United States, are held to constitute contracts, and to be within the protecting clause of the Constitution prohibiting any impairing of their obligation.

The grant to the complainant was invaded by the subsequent grant to the Pensacola and Louisville Railroad Company. If the first grant was valid, the second was void, according to all the decisions of this court, upon the power of a State to impair its grant, since the Dartmouth College Case. The court below did not hold otherwise, and I do not understand that a different view is taken here; but it decided, and this court sustains the decision, that the statute making the first grant was void, by reason of its conflict with the act of Congress of July 24, 1866.

With all deference to my associates, I cannot see that the act of Congress has any thing to do with the case before us. In my judgment, it has reference only to telegraph lines over and along military and post roads on the public domain of the United States. The title of the act expresses its purpose; namely, "To aid in the construction of telegraph lines, and to secure to the government the use of the same for postal, military, and other purposes." The aid conferred was the grant of a right of way over the public domain; the act does not propose to give aid in any other way. Its language is, that any telegraph company organized under the laws of a State "shall have the right to construct, maintain, and operate lines of telegraph through and over any portion of the public domain, over and along any of the military and post roads which have been or may hereafter be declared such by act of Congress, and over and across the navigable streams or waters of the United States." The portion of the public domain which may be thus used is designated by reference to the military and post roads upon it. Were there any doubt that this is the

correct construction of the act, the provision which follows in the same section would seem to remove it; namely, that any of the said companies shall "have the right to take and use from *such public lands* the necessary stone, timber, and other materials for its posts, piers, stations, and other needful uses in the construction, maintenance, and operation of said lines of telegraph, and may pre-empt and use such portion of the *unoccupied public lands*, subject to pre-emption, through which its said lines of telegraph may be located, as may be necessary for its stations, not exceeding forty acres for each station, but such sections shall not be within fifteen miles of each other." In the face of this language, the Italics of which are mine, there ought not to be a difference of opinion as to the object of the act, or as to its construction. The conclusion reached by the majority of the court not only overlooks this language, but implies that Congress intended to give aid to the telegraph companies of the country, — those existing or thereafter to be created, — not merely by allowing them to construct their lines over and along post-roads upon the public lands, but also over and along such roads within the States which are not on the public lands, where, heretofore, it has not been supposed that it could rightfully exercise any power.

The only military roads belonging to the United States within the States are in the military reservations; and to them the act obviously does not apply. And there are no post-roads belonging to the United States within the States. The roads upon which the mails are carried by parties, under contract with the government, belong either to the States, or to individuals, or to corporations, and are declared post-roads only to protect the carriers from being interfered with, and the mails from being delayed in their transportation, and the postal service from frauds. The government has no other control over them. It has no proprietary interest in them or along them to bestow upon any one. It cannot use them, without paying the tolls chargeable to individuals for similar uses; it cannot prevent the State from changing or discontinuing them at its pleasure; and it can acquire no ownership or property interest in them, except in the way in which it may acquire any other property in the States, — namely, by purchase, or by appropria-

tion upon making just compensation. *Dickey* v. *Turnpike Road Co.*, 7 Dana (Ky.), 113.

The public streets in some of our cities are post-roads, under the declaration of Congress (Rev. Stat., sect. 3964); and it would be a strange thing if telegraph lines could be erected by a foreign corporation along such streets without the consent of the municipal and State authorities, and, of course, without power on their part to regulate its charges or control its management. Yet the doctrine asserted by the majority of the court goes to this length: that, if the owners of the property along the streets consent to the erection of such lines by a foreign corporation, the municipality and the State are powerless to prevent it, although the exclusive right to erect them may have been granted by the State to a corporation of its own creation.

If by making a contract with a party to carry the mails over a particular road in a State, which thus becomes by act of Congress for that purpose a post-road, Congress acquires such rights with respect to the road that it can authorize corporations of other States to construct along and over it a line of telegraph, why may it not authorize them to construct along the road a railway, or a turnpike, or a canal, or any other work which may be used for the promotion of commerce? If the authority exist in the one case, I cannot see why it does not equally exist in the other. And if Congress can authorize the corporations of one State to construct telegraph lines and railways in another State, it must have the right to authorize them to condemn private property for that purpose. The act under consideration does not, it is true, provide for such condemnation; but if the right exist to authorize the construction of the lines, it cannot be defeated from the inability of the corporations to acquire the necessary property by purchase. The power to grant implies a power to confer all the authority necessary to make the grant effectual. It was for a long time a debated question whether the United States, in order to obtain property required for their own purposes, could exercise the right of eminent domain within a State. It has been decided, only within the past two years, that the government, if such property cannot be obtained by purchase, may appro-

priate it, upon making just compensation to the owner, *Kohl* v. *United States*, 91 U. S. 367; but never has it been suggested that the United States could enable a corporation of one State to condemn property in another State, in order that it might transact its private business there.

We are not called upon to say that Congress may not construct a railroad as a post-road, or erect for postal purposes a telegraph line. It may be that the power to establish post-roads is not limited to designating the roads which shall be used as postal routes, — a limitation which has been asserted by eminent jurists and statesmen.[1] If it be admitted that the power embraces also the construction of such roads, it does not follow that Congress can authorize the corporation of one State to construct and operate a railroad or telegraph line in another State for the transaction of private business, or even to exist there, without the permission of the latter State. By reason of its previous grant to the complainant, Florida was incompetent to give such permission to the assignor of the defendant, or to any other company, to construct a telegraph line in the county of Escambia. The act of the State of Feb. 3, 1874, in the face of this grant, can only be held to authorize the construction of telegraph lines by different companies in other counties. If, therefore, the defendant has any rights in that county, they are derived solely from the act of Congress.

A corporation can have no legal existence beyond the limits of the sovereignty which created it. In *Bank of Augusta* v. *Earle* (13 Pet. 519), it was said by this court that "it must dwell in the place of its creation, and cannot migrate to another sovereignty." And in *Paul* v. *Virginia* (8 Wall. 168), we added, that "the recognition of its existence even by other States, and the enforcement of its contracts made therein, depend purely upon the comity of those States, — a comity which is never extended where the existence of the corporation or the exercise of its powers is prejudicial to their interests or repugnant to their policy. Having no absolute right of recognition in other States, but depending for such recognition and the enforce-

[1] Elliott's Debates, edition of 1836, 433, 487; Views of President Monroe accompanying his veto message of May 4, 1822; Views of Judge McLean in his dissenting opinion in the *Wheeling Bridge Case*, 18 How. 441, 442.

ment of its contracts upon their assent, it follows, as a matter of course, that such assent may be granted, upon such terms and conditions as those States may think proper to impose. They may exclude the foreign corporation entirely, they may restrict its business to particular localities, or they may exact such security for the performance of its contracts with their citizens as in their judgment will best promote the public interest. The whole matter rests in their discretion." If, therefore, foreign corporations can exist in the State of Florida, and do business there by the authority of Congress, it must be because Congress can create such corporations for local business, — a doctrine to which I cannot assent, and which to my mind is pregnant with evil consequences.

In all that has been said of the importance of the telegraph as a means of intercourse, and of its constant use in commercial transactions, I fully concur. Similar language may be used with regard to railways; indeed, of the two, the railway is much the more important instrument of commerce. But it is difficult to see how from this fact can be deduced the right of Congress to authorize the corporations of one State to enter within the borders of another State and construct railways and telegraph lines in its different counties for the transaction of local business. The grant to the complainant in no way interferes with the power of Congress, if it possess such power, to construct telegraph lines or railways for postal service or for military purposes, or with its power to regulate commerce between the States. The imputation that Florida designed by the grant to obstruct the powers of Congress in these respects is not warranted by any thing in her statute. A like imputation, and with equal justice, might be made against every State in the Union which has authorized the construction of a railway or telegraph line in any one of its counties, with a grant of an exclusive right to operate the road or line for a limited period. It is true the United States, equally with their citizens, may be obliged in such cases to use the road or line; but it has not heretofore been supposed that this fact impaired the right of the State to make the grant. When the general government desires to transact business within a State, it necessarily makes use of the highways and modes of transit provided under

the laws of the State, in the absence of those of its own creation.

The position advanced, that if a corporation be in any way engaged in commerce it can enter and do business in another State without the latter's consent, is novel and startling. There is nothing in the opinion in *Paul* v. *Virginia* which gives any support to it. The statute of Virginia, which was under consideration in that case, provided that no insurance company not incorporated under its laws should do business within the State, without previously obtaining a license for that purpose; and that it should not receive such license until it had deposited with the treasurer of the State bonds of a specified character to an amount varying from $30,000 to $50,000. No such deposit was required of insurance companies incorporated by the State for carrying on their business within it; and in that case the validity of the discriminating provisions of the statute, between the corporations of the State and those of other States, was assailed. It was contended, among other things, that the statute was in conflict with the power vested in Congress to regulate commerce among the several States; that the power included commerce carried on by corporations as well as that carried on by individuals; and that the issuing of a policy of insurance upon property in one State by a corporation of another State was a transaction of inter-state commerce. The court replied, that it was true that the language of the grant to Congress made no reference to the instrumentalities by which commerce might be carried on; that it was general, and included alike commerce by individuals, partnerships, associations, and corporations; and that, therefore, there was nothing in the fact, that the insurance companies of New York were corporations, which impaired the argument of counsel, but that its defect lay in the character of the business; that issuing a policy of insurance was not a transaction of commerce; that the policies were mere contracts of indemnity against loss by fire, and not articles of commerce in any proper meaning of the term. In other words, the court held that the power of Congress to regulate commerce was not affected by the fact that such commerce was carried on by corporations, but that a contract of insurance made by a corporation of one

State upon property in another State was not a transaction of inter-state commerce. It would have been outside of the case for the court to have expressed an opinion as to the power of Congress to authorize a foreign corporation to do business in a State, upon the assumption that issuing a policy of insurance was a commercial transaction. And it is impossible to see any bearing of the views, which were expressed, upon the doctrine advanced here, that a corporation of one State, in any way engaged in commerce, can enter another State and do business there without the latter's consent. Let this doctrine be once established, and the greater part of the trade and commerce of every State will soon be carried on by corporations created without it. The business of the country is to a large extent conducted or controlled by corporations; and it may be, as was said by this court in the case referred to, "of the highest public interest that the number of corporations in the State should be limited, that they should be required to give publicity to their transactions, to submit their affairs to proper examination, to be subject to forfeiture of their corporate rights in case of mismanagement, and that their officers should be held to a strict accountability for the manner in which the business of the corporations is managed, and be liable to summary removal." All these guards against corporate abuses the State would be incapable of taking against a corporation of another State operating a railway or a telegraph line within its borders under the permission of Congress, however extortionate its charges or corrupt its management. The corporation might have a tariff of rates and charges prescribed by its charter, which would be beyond the control of the State; and thus, by the authority of Congress, a State might be reduced to the condition of having the rates of charges for transportation of persons and freight and messages within its borders regulated by another State. Indeed, it is easy to see that there will remain little of value in the reserved rights of the States, if the doctrine announced in this case be accepted as the law of the land.

The power vested in Congress to regulate commerce "among the several States" does not authorize any interference with the commerce which is carried on entirely within a State. "Com-

prehensive as the word 'among' is," says Chief Justice Marshall, "it may very properly be restricted to that commerce which concerns more States than one;" and "the completely internal commerce of a State, then, may be considered as reserved for the State itself." *Gibbons* v. *Ogden*, 9 Wheat. 194, 195. That commerce embraces the greater part of the business of every State. Every one engaged in the transportation of property or persons, or in sending messages, between different points within the State, not destined to points beyond it, or in the purchase or sale of merchandise within its borders, is engaged in its commerce; and the doctrine that Congress can authorize foreign corporations to enter within its limits and participate in this commerce without the State's consent is utterly subversive of our system of local State government. State control in local matters would thus be impossible.

The late war was carried on at an enormous cost of life and property, that the Union might be preserved; but, unless the independence of the States within their proper spheres be also preserved, the Union is valueless. In our form of government, the one is as essential as the other; and a blow at one strikes both. The general government was formed for national purposes, principally that we might have within ourselves uniformity of commercial regulations, a common currency, one postal system, and that the citizens of the several States might have in each equality of right and privilege; and that in our foreign relations we might present ourselves as one nation. But the protection and enforcement of private rights of both persons and property, and the regulation of domestic affairs, were left chiefly with the States; and, unless they are allowed to remain there, it will be impossible for a country of such vast dimensions as ours — with every variety of soil and climate, creating different pursuits, and conflicting interests in different sections — to be kept together in peace. As long as the general government confines itself to its great but limited sphere, and the States are left to control their domestic affairs and business, there can be no ground for public unrest and disturbance. Disquiet can only arise from the exercise of ungranted powers.

Over no subject is it more important for the interests and welfare of a State that it should have control, than over corpo-

rations doing business within its limits. By the decision now rendered, congressional legislation can take this control from the State, and even thrust within its borders corporations of other States in no way responsible to it. It seems to me that, in this instance, the court has departed from long-established doctrines, the enforcement of which is of vital importance to the efficient and harmonious working of our national and State governments.

MR. JUSTICE HUNT. I dissent, on the ground that the act of Congress was intended only to apply to telegraph lines constructed upon the public domain.

MR. JUSTICE HARLAN did not sit in this case, nor take any part in deciding it.

JONES v. UNITED STATES.

1. In an executory contract for the manufacture of goods, and their delivery on a specified day, no right of property passes to the vendee; and, time being of the essence of the contract, he is not bound to accept and pay for them, unless they are delivered or tendered on that day.
2. The court below having found that the goods had not been delivered or tendered at the stipulated time, nor an extension of time for the performance of the contract granted, and there being nothing in the case to warrant the contractor in assuming that any indulgence would be allowed, the United States was not estopped from setting up that when the goods were tendered the contract was at an end.

APPEAL from the Court of Claims.

The facts are stated in the opinion of the court.

Mr. James Lowndes, for the appellant.

The Solicitor-General, *contra*.

MR. JUSTICE CLIFFORD delivered the opinion of the court.

Time is usually of the essence of an executory contract for the sale and subsequent delivery of goods, where no right of property in the same passes by the bargain from the vendor to the purchaser; and the rule in such a case is, that the purchaser

is not bound to accept and pay for the goods, unless the same are delivered or tendered on the day specified in the contract. Addison, Contr. 185; *Gath* v. *Lees*, 3 H. & C. 558; *Coddington* v. *Paleologo*, Law Rep. 2 Exch. 196.

Articles of agreement were made June 1, 1864, between an assistant-quartermaster of the army and the petitioner, who contracted to manufacture and deliver at the clothing depot of the army in Cincinnati, by or before the 15th of December then next, two hundred thousand yards of dark-blue uniform-cloth; and it was agreed that deliveries under the contract should be made as follows: five thousand yards in June, twenty-five thousand yards in July, twenty-five thousand yards in August, thirty-five thousand yards in September, fifty thousand yards in October, fifty thousand yards in November, and ten thousand yards on or before the 15th of December in the same year.

Other persons were interested with him in the contract at the time it was made; but one after another retired, until the petitioner is the only one that retains any interest. His claim is fully set forth in his petition.

Certain instalments of the cloth were delivered, for which the United States paid the contract price, excepting ten per cent reserved by the United States, pursuant to the written contract. Neither party complains of any default prior to August of that year, when the mill in which the cloths were manufactured was destroyed by fire, and the petitioner, in consequence of the loss, failed to make the deliveries of the cloth as the contract required; and the assistant-quartermaster called his attention to the fact, and notified the sureties that he should proceed against their principal for his delinquency.

Unable to fulfil the terms of the contract, he applied by letter to the person in charge of the depot to be released from the obligation, and for the payment of the reserved ten per cent. Being unsuccessful in that application, he visited Washington, for the purpose of applying to the department to be released from the unfinished part of his contract; and with that view sought an interview with the quartermaster-general, who referred him to the head of the bureau of clothing, where he was told that there was no power out of Congress to release him,

and that he must furnish the goods. Had the conversation between the parties stopped there, the case would be destitute of any color of equity; but the finding of the court below shows that the head of the bureau remarked, that, upon application to the assistant-quartermaster, sufficient time would be allowed to deliver the goods.

Though told that there was no power out of Congress to release him from his contract, he procured the necessary quantity of such cloth to be manufactured, and applied by letter to the assistant-quartermaster for leave to complete the contract, who referred the letter to the quartermaster-general for decision; and his reply to the petitioner, as given in the findings, was, that he could not authorize the release from contracts, nor the extension of time for the delivery of articles under a contract, nor any action whatever not in accordance with their terms and conditions.

Prices in the market fell one-half; but the petitioner tendered the cloths to the assistant-quartermaster, who refused to receive the same, because the time for deliveries under the contract had passed.

Damages are claimed by the petitioner, upon the ground that the time for the delivery of the cloths, as specified in the contract, was extended: but the Court of Claims decided that the theory of fact involved in the defence was not proved; that the remarks of the head of the bureau of clothing were not sufficient to support that theory, as they might not imply any thing more than the opinion of that officer as to what the assistant-quartermaster would do.

The petition having been dismissed, due appeal was taken by the petitioner; and he assigns the following errors: 1. That the court erred in holding that time was of the essence of the written contract. 2. That the court erred in deciding that there was not a valid extension as to the time for delivering the cloths. 3. That the court erred in overruling the proposition of the petitioner, that the United States were estopped from denying the existence of the contract when the goods were tendered. 4. That the court erred in holding that there was not a new contract, and that such new contract was void because not in writing.

Whether one promise be the consideration for another, or whether the performance, and not the mere promise, be the consideration, is to be determined by the intention and meaning of the parties, as collected from the instrument, and the application of good sense and right reason to each particular case. Instructive rules for the accomplishment of that purpose have been stated in various decisions of the court and in treatises of high authority, some few of which may be consulted in this case to advantage. Chitty, Contr. 668.

Where an act is to be performed by the plaintiff before the accruing of the defendant's liability under his contract, the plaintiff must prove either his performance of such condition precedent, or an offer to perform it which the defendant rejected, or his readiness to fulfil the condition until the defendant discharged him from so doing, or prevented the execution of the matter which the contract required him to perform. For, where the right to demand the performance of a certain act depends on the execution by the promisee of a condition precedent or prior act, it is clear that the readiness and offer of the latter to fulfil the condition, and the hindrance of its performance by the promisor, are in law equivalent to the completion of the condition precedent, and will render the promisor liable upon his contract. *Graves* v. *Legg*, 9 Exch. 709; *Morton* v. *Lamb*, 7 Term, 125; 2 Wms. Saund. 352 *b*; 2 Smith, Lead. Cas. 13.

Well-considered authorities everywhere agree that a contract may be so framed that the promises upon one side may be dependent upon the promises upon the other; so that no action can be maintained, founded on the written contract, without showing that the plaintiff has performed, or at least has been ready, if allowed by the other party, to perform, his own stipulations, which are a condition precedent to his right of action: nor is it necessary to enter into much discussion in this case to prove that the described instalments of clothing were required, by the true intent and meaning of the parties, as expressed in the written contract, to be delivered at the time and place therein specified and set forth, as the manifest purpose and object of the contract was to procure necessary supplies of clothing for an army in the field.

None will pretend that any right of property in the clothing passed to the United States by the bargain between the parties; and the rule in such cases is, that time is and will be of the essence of the contract, so long as the contract remains executory, and that the purchaser will not be bound to accept and pay for the goods, if they are not delivered or tendered on the day specified in the contract. Addison, Contr. 185.

Suppose that is so, still it is contended by the petitioner that the time of performance was extended by the remarks of the head of the bureau of clothing when the contractor applied to be released from the obligation to complete the unfinished part of his contract; but the court is unable to concur in that proposition. The finding of the court below shows that no such extension was ever made.

Conditions precedent may doubtless be waived by the party in whose favor they are made; but the findings of the court below do not afford any ground to support any such theory. Cases arise where either party, in case of a breach of the contract, may be compensated in damages; and in such cases it is usually held that the conditions are mutual and independent: but where the conditions are dependent and of the essence of the contract, it is everywhere held that the performance of one depends on the performance of another, in which case the rule is universal, that, until the prior condition is performed, the other party is not liable to an action on the contract. Addison, Contr. 925.

Where time is of the essence of the contract, there can be no recovery at law in case of failure to perform within the time stipulated. *Slater* v. *Emerson*, 19 How. 224.

Additional authorities to show that a party bound to perform a condition precedent cannot sue on the contract without proof that he has performed that condition, is scarcely necessary, as the principle has become elementary. *Governeur* v. *Tillotson*, 3 Edw. (N. Y.) Ch. 348.

Conditions, says Story, may be either precedent or subsequent, but a condition precedent is one which must happen before either party becomes bound by the contract. Thus, if a person agrees to purchase a cargo of a certain ship at sea, provided the cargo proves to be of a particular quality, or pro-

vided the ship arrives before a certain time, or at a particular port, each proviso is a condition precedent to the performance of such a contract; and unless the cargo proves to be of the stipulated quality, or the ship arrives within the agreed time or at the specified port, no contract can possibly arise. Story, Contr. 33.

Impossible conditions cannot be performed; and if a person contracts to do what at the time is absolutely impossible, the contract will not bind him, because no man can be obliged to perform an impossibility; but where the contract is to do a thing which is possible in itself, the performance is not excused by the occurrence of an inevitable accident or other contingency, although it was not foreseen by the party, nor was within his control. Chitty, Contr. 663; *Jervis* v. *Tompkinson*, 1 H. & N. 208.

Other defences failing, the petitioner insists that the United States are estopped to deny that the time of performance was extended, as set up in his second assignment of error; but the court is unable to sustain that proposition, as the remark of the head of the bureau does not amount to a contract for such an extension, being nothing more than the expression of an opinion that the assistant-quartermaster would grant the applicant some indulgence.

Viewed in that light, it is clear that the United States did not do any thing to warrant the contractor in changing his position, and, if not, then it is settled law that the principle of estoppel does not apply. *Packard* v. *Sears*, 8 Ad. & E. 474; *Freeman* v. *Cook*, 2 Exch. 654; *Foster* v. *Dawber*, 6 id. 854; *Edwards* v. *Chapman*, 1 Mee. & W. 231; *Swain* v. *Seamens*, 9 Wall. 254.

Estoppel does not arise in such a case, unless the party for whom the service is to be performed induced the other party by some means to change his position and act to his prejudice in consequence of the inducement; but in the case before the court, the remark made by the head of the bureau was not of a character to warrant the petitioner to assume that it was agreed that any such indulgence would be given. Benjamin, Sales, 45; *United States* v. *Shaw*, 1 Cliff. 310.

Conclusive evidence that the time of performance had ex-

pired is found in the findings of the court, and the petitioner failing to establish his theory that the time of performance had been extended, it is clear that there is no error in the record.

Judgment affirmed.

UNITED STATES v. STATE BANK.

1. Where a trust-fund has been perverted, the *cestui que trust* can follow it at law as far as it can be traced.
2. The United States cannot, against the claim of an innocent party, hold his money which has gone into its treasury by means of the fraud of its agent.
3. The rules of law applicable to an individual in a like case apply also to the United States. Its sovereignty is in no wise involved.

APPEAL from the Court of Claims.

This action and the following were brought, one by the State National Bank, of Boston, Mass., and the other by the Merchants' National Bank, of the same place, to recover from the United States $480,000 in gold coin, being the amount of certain gold certificates deposited, Feb. 28, 1867, in the sub-treasury at Boston, and on the same day cancelled and forwarded to the Treasurer of the United States at Washington. The cause of action in each case grew out of the same transaction, and the findings of fact by the court below are the same. As they are substantially set forth in the opinion of the court, they are omitted here. The certificates of deposit referred to in the opinion are as follows: —

"UNITED STATES TREASURY, BOSTON.

"Deposited by Mellen, Ward, & Co., of Boston, on acc't of deposit of gold-c't'f's, amount four hundred & twenty thousand dollars · the same to be exchanged for gold-c't'f's, or its equivalent, upon their order or demand.

"J. F. HARTWELL, *Cr.*

"Date, Feb. 28, 1867.

(Indorsed:) "Pay only upon the order of C. H. Smith, cash.

"MELLEN, WARD, & Co

"BOSTON, Feb. 28, 1867."

"UNITED STATES TREASURY, BOSTON.

"Deposited by Mellen, Ward, & Co., of Boston, on acc't of gold certificates deposited. Amount one hundred & sixty thousand dollars, to be exchanged for gold-c't'fs or its equivalent on demand.

"J. F. HARTWELL, *Cr.*

(Indorsed :) "Pay only to the order of C. H. Smith, cash.

"MELLEN, WARD, & Co.

"BOSTON, Feb. 28, 1867."

The Court of Claims rendered judgment in favor of the State Bank and against the Merchants' Bank. From the judgments rendered against them respectively the United States and the Merchants' Bank severally appealed to this court.

The Solicitor-General, for the United States.

The State Bank has merely the rights of the owner of a collateral security, and the specific recovery thereof against the United States, who is in possession, is the only relief to which it is entitled.

The Court of Claims has, in certain cases, cognizance of the legal rights of claimants against the United States; but it cannot enforce the moral obligations of the government or bestow its grace. *Gibbons* v. *United States*, 8 Wall. 269.

The charge that the certificates were received by the United States without consideration and in fraud of the rights of the State Bank is unwarranted, and in this proceeding, which is analogous to a petition of right, is inadmissible. The government is not, upon an implied assumpsit, liable for the torts of its officer committed while in its service and apparently for its benefit. *Gibbons* v. *United States*, *supra*; *Clark* v. *Dupree*, 2 Dev. (N. C.) L. 411; *Mann* v. *Kendall*, 2 Jones (N. C.) L. 192.

The receipts given to Mellen, Ward, & Co. by Hartwell, in the discharge of his official duty, define the claim. Smith, the cashier of the State Bank, having observed at the time that they were so given, they were thereupon indorsed by that firm to him as cashier. As the ordinary vouchers of such transactions, they measure the quality and degree of the obligation of the government, and obviously were to be surrendered whenever a successful demand was made for the fulfilment of the contract, whether at the sub-treasury or in a court. They were

neither declared upon nor produced in the course of the trial. In this connection, it will be observed that the first receipt is perhaps negotiable, *Miller* v. *Austen*, 13 How. 218; and, therefore, like all other papers of its class, cannot in general be recovered upon, unless produced at the trial.

If, however, the former receipt be not negotiable, then both receipts express the contracts made by the United States in regard to the deposits, not only as to their substance but also as to the parties by whom they were to be enforced.

Mr. C. B. Goodrich, for the State Bank.

The doctrine of *Bayne* v. *United States* (93 U. S. 642), that public money obtained from a disbursing officer, without consideration, is money of the United States, applies where, as in this case, the United States, without consideration and by the fraud of its officer, receives the money of an individual. His right to it remains; and where, as in this instance, the government is liable to suit, may be judicially enforced. In such a case between private parties, assumpsit lies. *Moses* v. *Macferlan*, 2 Burr. 1005.

Where a party has acquired the legal right to property to which another has the better right, a court of equity will convert him into a trustee of the true owner, and compel him to convey the legal title. *Stark* v. *Starrs*, 6 Wall. 419; *Meader* v. *Norton*, 11 id. 458. See also *United States* v. *Buford*, 3 Pet. 12.

Mr. Sidney Bartlett, for the banks.

The legal title to the certificates was in the Merchants' Bank, and by the subsequent delivery of them was vested in the State Bank. *Merchants' Bank* v. *State Bank*, 6 Wall. 604.

The certificates were obtained by the cashier of the subtreasury at Boston, not by larceny nor by a fraudulent contract, in his individual right, but by a contract in the name of the United States, which he was by law fully authorized to make. The government is not, under such circumstances, a *bona fide* purchaser without notice, but is responsible for money derived under the contract and placed in its coffers. To hold otherwise, because the contract was part of a secret scheme of the cashier to appropriate to his own use the money after its receipt and to give a fraudulent voucher therefor, would be extraordinary indeed.

By cancelling the gold certificates, a person, had the contract thus cancelled been made with him, would be rendered liable for the sums due. In this case, the petition sets out all the facts; and if by law the liability of the government is founded either on its contract contained in the certificates, or on its treating them as money, the pleadings are sufficient to sustain a judgment therefor.

MR. JUSTICE SWAYNE delivered the opinion of the court.

Upon analyzing this case as it is presented in the record, the facts are found to be few and simple.

Hartwell was cashier of the sub-treasury in Boston. He embezzled a large amount of money belonging to the United States, by lending it to Mellen, Ward, & Co. As the time for the examination of the funds in the sub-treasury approached, Mellen, Ward, & Co. endeavored to tide Hartwell over the crisis, and to conceal his guilt and their own by the devices out of which this controversy has arisen. They had sold to the Merchants' National Bank, of Boston, a large amount of gold certificates, with the understanding that they might buy back the like amount by paying what the bank had paid, and interest at the rate of six per cent per annum. Carter, one of the firm, arranged with Smith, the cashier of the State National Bank, of Boston, to buy from the Merchants' National Bank, of Boston, gold certificates to the amount of $420,000, and to pay for them with the checks of Mellen, Ward, & Co., certified to be good by Smith as such cashier, and then to deposit the certificates in the sub-treasury, where they were to remain until the ensuing day. A receipt was to be taken from the proper sub-treasury officer. The certificates were bought, paid for, and deposited accordingly. Hartwell received them from Smith in the presence of Carter, and made out the receipt to Mellen, Ward, & Co., or order. Smith inquired why the receipt was to them. Carter thereupon indorsed it by the firm name to Smith as cashier, and Smith took it without further remark.

Subsequently, pursuant to a like arrangement between the same parties, Smith, as such cashier, made a further purchase of gold and gold certificates from the Merchants' Bank, and converted the gold into gold certificates. The aggregate of the

certificates thus procured was $60,000. Thereafter Smith, as such cashier, at the instance of Carter, made a further purchase of gold certificates from another bank to the amount of $100,000. All these certificates, amounting to $160,000, were also deposited by Smith in the sub-treasury in the presence of Carter, and a receipt taken and indorsed as before to Smith as cashier. The receipts specified that the certificates deposited were "to be exchanged for gold certificates or its equivalent, on demand" Only $60,000 of the last deposit is claimed by the appellee. The residue is not involved in this controversy. The total claimed is $480,000. All these things occurred on the 28th of February, 1867. On the following day, Smith presented the receipts at the sub-treasury, and payment was refused. The certificates were all cancelled, and sent to the proper officer at Washington. The gold which they represented has since remained in the treasury of the United States. Carter gave Smith plausible reasons, not necessary to be repeated, for desiring to make the deposits. The Court of Claims found these facts: "He (Carter) submitted his plan to Hartwell, which was as follows: He proposed to buy gold certificates in New York, bring them to Boston, and borrow money upon them of the Merchants' Bank, and he then proposed to get Smith, the cashier of the State Bank, to pay for these certificates, and leave them with Hartwell during the examination. Hartwell made no objection to this plan, but he thought Smith would not do it. The plan was carried into effect by Carter, as hereinbefore set forth; but Hartwell had no agency in carrying it out, except to receive the moneys and gold certificates paid to him on the 28th of February, as aforesaid, and he had no actual knowledge of the proceedings taken by Carter on that day to obtain said gold certificates. When Carter and Smith deposited the $420,000 of gold certificates in the sub-treasury, as aforesaid, Smith did not know Hartwell, nor did Hartwell know Smith, or know that Smith was connected with any bank or money institution."

The case, under another aspect, was before us on a former occasion. *Merchants' Bank* v. *State Bank*, 10 Wall. 604. We there held, after the most careful consideration, that the legal title to the certificates was, by the purchases made by its cashier,

vested in the State Bank. We find no reason to change this view. The finding of the court shows clearly that Hartwell knew when he received the certificates that they did not belong to Mellen, Ward, & Co., and that they did belong to the State Bank, represented by Smith as its agent. Hartwell was privy to the entire fraud from the beginning to the end, and was a participant in its consummation.

It is not denied that Smith acted in entire good faith. What he did was honestly done, and it was according to the settled and usual course of business. Hartwell was the agent of the United States. He was appointed by them, and acted for them. He did, so far as Smith knew, only what it was his duty to do, and what he did constantly for others, and it is not denied that it was according to the law of the land. 12 Stat. 711. Smith no more suspected fraud, and had no more reason to suspect it, than any other of the countless parties who dealt with the subtreasury in like manner.

There could hardly be a stronger equity than that in favor of the plaintiff. It remains to consider the law of the case.

The interposition of equity is not necessary where a trust fund is perverted. The *cestui que trust* can follow it at law as far as it can be traced. *May* v. *Le Claire*, 11 Wall. 217; *Taylor et al.* v. *Plumer*, 3 Mau. & Sel. 562.

Where a draft was remitted by a collecting agent to a sub-agent for collection, and the proceeds were applied by the sub-agent in payment of the indebtedness of the agent to himself, in ignorance of the rights of the principal, this court held that, there being no new advance made, and no new credit given by the sub-agent, the principal was entitled to recover against him. *Wilson & Co.* v. *Smith*, 3 How. 763. See also *Bank of the Metropolis* v. *The New England Bank*, 6 id. 212.

A party who, without right and with guilty knowledge, obtains money of the United States from a disbursing officer, becomes indebted to the United States, and they may recover the amount. An action will lie whenever the defendant has received money which is the property of the plaintiff, and which the defendant is obliged by natural justice and equity to refund. The form of the indebtedness or the mode in which it was incurred is immaterial. *Bayne et al., Trustees*, v. *United States* 93 U. S. 642.

The United States must use due diligence to charge the indorsers of a bill of exchange, and they are liable to damages if they allow one which they have accepted to go to protest. *United States* v. *Barker*, 12 Wheat. 560; *Bank of the United States* v. *The United States*, 2 How. 711; *The United States* v. *Bank of the Metropolis*, 15 Pet. 377.

In these cases, and many others that might be cited, the rules of law applicable to individuals were applied to the United States. Here the basis of the liability insisted upon is an implied contract by which they might well become bound in virtue of their corporate character. Their sovereignty is in no wise involved.

Atlantic Bank v. *The Merchants' Bank* (10 Gray (Mass.), 532) and *Skinner* v. *The Merchants' Bank* (4 Allen (Mass.), 290) are, in their facts, strikingly like the case before us, and they involved exactly the same point. It was held in each of those cases, after an elaborate examination of the subject, that the defrauded bank was entitled to recover.

But surely it ought to require neither argument nor authority to support the proposition, that, where the money or property of an innocent person has gone into the coffers of the nation by means of a fraud to which its agent was a party, such money or property cannot be held by the United States against the claim of the wronged and injured party.

The agent was agent for no such purpose. His doings were vitiated by the underlying dishonesty, and could confer no rights upon his principal.

The appellee recovered below the amount claimed. A different result here would be a reproach to our jurisprudence.

Judgment affirmed.

NOTE. — In *Merchants' Bank* v. *United States*, MR. JUSTICE SWAYNE, in delivering the opinion of the court, remarked, the opinion in *United States* v. *State Bank* (*supra*, p. 30) decides this case. *Judgment affirmed.*

UNITED STATES v. CLARK.

1. When the Court of Claims sends here as part of its finding all the evidence on which a fact essential to the judgment there rendered was found, from which it appears that there was no legal evidence to establish such fact, this court must, on appeal, reverse the judgment.
2. At common law, a party to a suit is a competent witness to prove the contents of a trunk or package, which, by other testimony, is shown to have been lost or destroyed under circumstances that render some one liable for the loss.
3. Sect. 1079 of the Revised Statutes was intended to do no more than to restore in the Court of Claims the common-law rule excluding parties as witnesses, which had been abolished by the act of July 2, 1864 (13 Stat. 351); and hence the petitioner in this case is a competent witness to prove the contents of a package of government money taken from his official safe by robbers.
4. The petitioner being competent, neither his testimony before the court-martial which convicted the robbers, nor his report of the loss to his superior officer, is admissible as independent or original evidence, though it might be proper as corroborative of his own testimony.
5. The statute of limitation of suits in the Court of Claims (Rev. Stat., sect. 1069) is not applicable to a suit under sects. 1059–1062, because such a suit is brought to establish, not a claim in the just sense of that word, but a peculiar defence to a cause of action of the United States against the petitioner; and so long as the United States neglects to bring suit to establish that cause of action, so long must he be allowed to set up any defence thereto not in itself a separate demand.
6. The petitioner's right to sue in the Court of Claims did not accrue until the accounting officers held him liable for the sum lost, by refusing to credit his account therewith; and their final action was within six years before this suit was brought.

APPEAL from the Court of Claims.

This case was, on the appeal of the United States, before this court at the last term, and is reported in 94 U. S. 73, where the finding of the Court of Claims is stated.

The judgment below was then reversed, on account of an insufficient finding, and the cause remanded for further proceedings. Upon a subsequent trial, the Court of Claims made a further finding, and rendered judgment for Clark. The United States then brought the case here. As the additional finding is set forth in the opinion of this court, it is not necessary to insert it here.

Mr. Assistant-Attorney-General Smith for the United States.

Mr. Thomas H. Talbot, contra.

MR. JUSTICE MILLER delivered the opinion of the court.

This is an appeal from the Court of Claims, and very few cases involving no larger sum of money have given us more trouble. It was before us at the last term, and is reported. 94 U. S. 73. Upon an examination of the record, after the case had been submitted to us, it was discovered that on an essential fact in issue the Court of Claims had made no finding, but had sent us the evidence on that point. The judgment was therefore reversed, on the ground that there was no sufficient finding of the facts on which to render a judgment, and the cause was remitted to that court for further proceedings.

The Court of Claims has now found, with sufficient distinctness, the existence of the fact required; but it still sends to us, with the record, the evidence on which it so found. It is this which produces the embarrassment, as we shall presently see.

The suit is brought by Clark, under the act of May 9, 1866 (14 Stat. 44, Rev. Stat., sects. 1059, 1062), which authorizes the Court of Claims to hear and determine the claim of any disbursing officer for relief from responsibility on account of capture or other loss of funds while in the line of his duty, and for which such officer was and is held responsible; and, in case the loss has been found to be without fault or negligence on the part of such officer, to make a decree setting forth the amount thereof, which shall be allowed as a credit by the accounting officers of the treasury in the settlement of his accounts.

The Court of Claims finds that the claimant lost by robbery, while in the line of his duty as assistant-paymaster in the army, at Franklin, Texas, on the sixth day of April, 1865, a package of government funds; that the package was in his official safe at his quarters, and the loss was without fault or neglect on his part. The fifth finding of the court, and the one which was made to supply the defect found in the case when it was here before, is as follows: "The package of government funds which the claimant lost by robbery, as above stated, contained the sum of $15,979.87."

If this were all, there would be no difficulty in holding that these findings sufficiently established all that is necessary to support the decree in favor of the claimant for a credit of that sum in his account with the government. But the Court of

Claims has mingled with, and made a part of its finding of facts, and sent here as part of the record, the proceedings of a court-martial which tried and convicted Thomas Boylan and Louis Morales of committing the robbery by which the money was lost. It sufficiently appears that the only evidence on which the Court of Claims made its fifth finding, namely, the amount of the money which was in the government package so lost, was the record of the court-martial, and that claimant there testified to the amount of the loss. Also, that he was of good character, personally and officially; had always kept regular and exact accounts of the funds in his official custody; made due returns in regard to them, and properly accounted therefor. And that he immediately reported to his superior officer that the funds in that safe were $15,979.87, which was the amount of the loss appearing in his official reports, and charged against him as a deficiency on the final revision and settlement of his accounts by the accounting officers of the treasury.

It is clear that upon this testimony alone the Court of Claims fixed the sum lost by claimant. We are asked by the counsel for the government to hold that it is not competent evidence to establish that fact.

It is manifest that, before we can do this, we must also hold that where that court has found in due form, and presented to us one of those ultimate facts which it is required to find, and which is necessary to its judgment, and has at the same time presented as part of its finding all the evidence on which that fact was found, we can look at both findings to see whether that evidence was competent proof of that fact. This is precisely what was done in *Moore* v. *United States*, 91 U. S. 270.

Counsel for the United States insist that a party in the Court of Claims has a right to bring before this court for review any and every ruling of the Court of Claims upon the admission or the rejection of evidence, and also its weight and effect upon the case. The question thus presented is one of much perplexity, and involves the right to a bill of exceptions in a court which sits without a jury, where the evidence is all in writing, and whose judgments we have, by our rules, sought to make final as to all the facts in the case.

We do not propose here to enter this field of inquiry further

than this case requires. And we think it does require us not to weigh the evidence, nor to decide whether the court below was bound to note the exception prayed by counsel, or even to include in their findings the matters of evidence we have above stated. But we are of opinion that when that court has presented, as part of their findings, what they show to be all the testimony on which they base one of the essential, ultimate facts, which they have also found, and on which their judgment rests, we must, if that testimony is not competent evidence of that fact, reverse the judgment for that reason. For here is, in the very findings of the court, made to support its judgment, the evidence that in law that judgment is wrong. And this not on the weight or balance of testimony, nor on any partial view of whether a particular piece of testimony is admissible, but whether, upon the whole of the testimony as presented by the court itself, there is any evidence to support its verdict; that is, its finding of the ultimate fact in question.

Entering upon the inquiry, whether there is here any evidence on which the court could have found the amount of the loss by the robbery, it seems too plain for argument that the record of the court-martial is wholly incompetent.

1. Clark was no party to that proceeding, and is not, therefore, bound by its findings; and, by a well-known rule, there is no mutuality, and, therefore, it cannot bind the United States. 2. The amount of the robbery was in no way an essential issue in the trial of the robbers. 3. And it may well be doubted whether a criminal proceeding in a military court can be used to establish any collateral fact in a civil proceeding in another court.

Nor can the evidence of a witness in that case be competent to establish a fact in another case, without some reason, such as his death or insanity since it was given. We will recur to this point presently.

Was the good character of the claimant, the regularity of his accounts, and the prompt report of the loss and its amount, competent evidence to establish that amount? The only thing in all this which could have any tendency to prove the sum lost is the report of its loss. This is but the testimony of the party claimant, and testimony not under oath. If he is incom

petent as a witness, this less direct mode of testifying must also be excluded. If he is competent, and had been introduced on the stand, this fact might be used as corroborative evidence. But while he is alive and competent, it must be excluded as primary or independent evidence; because there is better evidence in the sworn statement of the party himself, produced on the stand and subject to cross-examination.

It is obvious, however, that the court or the counsel were laboring under the conviction that claimant was not a competent witness, and were struggling to find other evidence of a fact which was known to him alone. In this we think they were mistaken, and that for the purpose of proving the contents of the stolen package, and for that purpose alone, he was competent.

We are of opinion that, by the rules of evidence derived from the common law, as it is understood in the United States, whenever it becomes important to ascertain the contents of a box, trunk, or package which has been lost or destroyed, under circumstances that make some one liable in a court of justice for the loss, and the loss and the liability are established by other testimony, the owner or party interested in the loss, though he may be a party to the suit, is a competent witness to prove the contents so lost or destroyed. 1 Greenl. Evid. §§ 348–350, and notes.

This is one of those exceptions to the rigorous rule of the common law excluding parties and persons having an interest in the result of the suit from becoming witnesses in their own behalf, which has been engrafted upon that system. It is founded in the necessity of permitting the only party who knows the matter to be proved to testify, in order to prevent an absolute failure of justice, where his right to relief has been established by other evidence. We are aware that there is a conflict of authority on this point, but we believe the preponderance is in favor of the proposition we have stated; and looking at it as a matter of principle, in the light of the progress of legislation and judicial decision, in the direction of more liberal rules of evidence, we have no hesitation in adopting it, in the absence of legislation by Congress on the subject.

But there is legislation by Congress, and it is doubtless to be attributed to this that Mr. Clark was not called to prove the contents of the lost package. Sect. 858 of the Revised Statutes,

originally enacted July 2, 1864, declares that "in the courts of the United States no witness shall be excluded in any action on account of color, or in any civil action because he is a party to or interested in the issue tried." This was a complete abolition of the rule of exclusion under the common law in all the courts of the United States, and under it the claimant would have been competent to prove not only the contents of a lost package, but every other fact necessary to establish his claim or title to the relief sought by the suit. Four years later, however, Congress became dissatisfied with this departure from the old rule of evidence as it applied to suits in the Court of Claims, and by the act of June 25, 1868 (Rev. Stat., sect. 1079), intended to restore it. It is there enacted that "no claimant, nor any person from or through whom any such claimant derives his title, claim, or right against the United States, nor any person interested in any such title, claim, or right, shall be a competent witness in the Court of Claims in supporting the same; and no testimony given by such claimant or person shall be used, except as provided in the next section." The next section provides for the examination of such parties at the instance of the government counsel.

It can hardly be supposed that Congress intended to do more in this last statute than to restore the common-law rule of exclusion as it stood before the passage of the act of 1864. There is nothing in the language of the act of 1868, nor in the purpose to be subserved, which required more; and in this respect the later act was limited to the Court of Claims, leaving the more progressive rule of 1864 to its full operation in all other courts. The peculiar form of expression of the act of 1868, so far from militating against this view, rather tends to confirm it. The parties are excluded from being witnesses in support of the title, claim, or right asserted in the suit, and no testimony given by them, — that is, no testimony given elsewhere on those points, — shall be used. But it is not inconsistent with this view, that, if the title or right of the claimant to relief is established by other evidence, he may be competent to prove, as under the common-law rule, the contents of the package in regard to which his right, title, and claim to relief has already been established. We are of opinion, therefore, that for this purpose the claimant

was a competent witness, and that his testimony was the best to be had, since the court finds that he kept no clerk or assistant who might know the necessary facts.

It follows, that, since there was no competent evidence before the Court of Claims, as shown by their own finding, of the contents or amount of the lost package, their finding on that subject was erroneous, and the case must be returned for a new trial. But as all the other facts necessary to a judgment have been found, and are without error in the finding, the new trial or hearing will be limited to the question of the contents of the lost package.

As the case has now been twice before us, and as counsel for the United States has insisted on a plea of the Statute of Limitations, we must dispose of that now.

"Every claim against the United States, cognizable in the Court of Claims, shall be for ever barred, unless the petition is filed . . . within six years after the claim first accrues." Rev. Stat., sect. 1069. The petition of plaintiff in this suit does not, in the just sense of the word, set forth a claim against the United States. It sets up a defence to a claim of the United States against the plaintiff. The Court of Claims finds that plaintiff is now sued in another court by the United States for the sum in controversy here.

The plaintiff asks, and by the very terms of the statute under which the Court of Claims acts can obtain, no judgment for money against the United States, nor fix any liability on the government to pay him any thing. By a very curious provision, the Court of Claims is authorized to establish for him a defence to a claim, which claim the government can only establish judicially in some other court. If that court could entertain jurisdiction of this matter when offered as a defence, it is very clear that the Statute of Limitations would be no bar to such defence there. Why should it be here? We think it is a principle of general application, that so long as a party who has a cause of action delays to enforce it in a legal tribunal, so long will any legal defence to that action be protected from the bar of the lapse of time, provided it is not a cross-demand in the nature of an independent cause of action. But if we are mistaken in this, it is clear that, until the accounting officers of

the treasury had refused to recognize the sum lost as a valid credit in the settlement of his accounts, there was no occasion to apply to the Court of Claims; and the statute, if applicable to this class of cases at all, did not begin to run until then. In the language of the statute, the officer is not held responsible for this amount until the accounting officers reject it as a credit, and it is only when he has been or is so held that he is authorized to sue in the Court of Claims to establish his defence.

Judgment reversed, and cause remanded for further proceedings in accordance with this opinion.

MR. JUSTICE HARLAN, with whom concurred MR. JUSTICE CLIFFORD, MR. JUSTICE SWAYNE, and MR. JUSTICE STRONG, dissenting.

I concur in the reversal of the judgment in this case, because there was no competent evidence before the Court of Claims of the amount of public moneys taken from Clark by this alleged robbery. But I feel obliged to express my dissent from some of the conclusions announced in the opinion of the majority of my brethren.

The proviso to the third section of the Civil Appropriation Act of July 2, 1864, declares, that "in the courts of the United States there shall be no exclusion of any witness on account of color, nor in civil actions because he is a party to or interested in the issue tried." 13 Stat. 351. Prior to its passage, the courts of the United States adhered, with great strictness, to the common-law rule that a party to the record cannot be a witness, either for himself or a co-suitor in the cause. *Bridges et al.* v. *Armour et al.*, 5 How. 91; *Stein* v. *Bowman et al.*, 13 Pet. 209.

Broad as was its language, that proviso was regarded as applying only to the courts of the United States referred to in the judiciary act. Congress, however, by sect. 3 of the general appropriation act of March 2, 1867 (14 Stat. 451), directed that it should "be construed to embrace all suits to which the United States shall be a party in the Court of Claims, either as plaintiff or defendant," thus rendering a party to an action in that court a competent witness against the United States, without reference to his interest in the issue.

That section remained in force but a short while; long enough, however, as we may infer from a subsequent enactment, to convince the legislative department that it was against public policy to allow suitors in the Court of Claims to testify in their own behalf against the government. Hence, by an act providing for appeals from that court, and for other purposes, approved June 25, 1868 (15 id. 75), it was declared, —

"That no plaintiff, claimant, or any person, from or through whom any such plaintiff or claimant derives his alleged title, claim, or right against the United States, or any person interested in any such title, claim, or right, shall be a competent witness in the Court of Claims in supporting any such title, claim, or right, and no testimony given by such plaintiff, claimant, or person shall be used: *Provided*, that the United States shall, if they see cause, have the right to examine such plaintiff, claimant, or person as a witness, under the regulations and with the privileges provided in sect. 8 of the act of March 3, 1863, entitled 'An Act to amend an act to establish a court for the investigation of claims against the United States, approved Feb. 24, 1855.'"

The privilege here referred to was that accorded to the government to require the claimant, upon the order of the court, to submit to an examination, under oath or affirmation, as to any and all matters pertaining to his claim, such examination not to become evidence in the cause except at the discretion of the United States. 12 Stat. 766.

The provisions of the acts of July 2, 1864, and June 25, 1868, so far as they relate to the competency of witnesses, were reenacted in the Revised Statutes. Sects. 858, 1079, 1080.

An act, approved May 9, 1866 (14 Stat. 44), confers jurisdiction upon the Court of Claims "to hear and determine the claim of any paymaster, quartermaster, commissary of subsistence, or other disbursing officer of the United States, . . . for relief from responsibility on account of losses by capture or otherwise, while in the line of his duty, of government funds, . . . and for which such officer was and is held responsible: *Provided*, that an appeal may be taken to the Supreme Court, as in other cases."

Sect. 2 provides "that whenever that court shall have ascertained the facts of any loss to have been without fault or neglect

on the part of such officer, it shall make a decree setting forth the amount thereof, upon which the proper accounting officers of the treasury shall allow to such officer the amount so decreed as a credit in the settlement of his accounts."

Under the authority of this statute Clark instituted this action against the United States, asserting that, in the year 1865, while in the line of his duty as paymaster, in the State of Texas, he had, without fault or neglect on his part, been robbed of government funds in the sum of $15,979.87, and praying that a decree be rendered relieving him from responsibility therefor.

The fact of a loss, without the fault or neglect of Clark, having been shown by other witnesses, this court holds that he is a competent witness, in his own behalf, to prove the extent of such loss. He is thus allowed to establish, by his own testimony, one of the essential facts upon which any decree in his favor must rest; viz., the amount for which he should receive credit in the settlement of his accounts.

In that view I cannot concur. I think it cannot be sustained upon principle or authority. The will of Congress as to the conditions upon which it allows the citizen to sue the government has been expressed in plain and unambiguous language, which leaves no room for construction. It is obviously our duty to execute the statute without reference to our opinion as to its wisdom or policy. If, under the circumstances of particular cases, it seems harsh when construed according to its terms, the remedy is with another department of the government, and not with the judiciary. The act which furnishes the sole authority for the institution of this action describes the demand of a disbursing officer to be relieved from responsibility for government funds which have been lost, as a "claim" which the Court of Claims may hear and determine. Congress not only expressly provides that no plaintiff or claimant in that court shall be a competent witness in supporting any claim or right he may assert against the United States; but, as if *ex industria* to prevent all misapprehension, and remove all possible doubt as to its intention, declares that "no testimony given by such plaintiff, claimant, or person shall be used." Nevertheless, this court holds that Clark may testify as to the extent of the credit he is entitled to receive, and that his testimony

upon that point may be used against the United States. If at the time of framing the act of June 25, 1868, the draughtsman intended to employ such terms as should effectually and in every conceivable contingency exclude the testimony of claimants when offered in their own behalf in the Court of Claims, he could, in my opinion, have used no more appropriate language. It is so simple and clear, that it would seem impossible for the utmost ingenuity to suggest a mode of defeating what appears to have been the evident purpose of Congress. A "claimant" or a "plaintiff" in the Court of Claims is incompetent as a witness against the United States. Is not Clark a "plaintiff," and does he not in this suit set up a claim or right? If allowed to be a witness to prove the amount of his loss, will he not give testimony in support of a "right" to be credited therewith? Is not the act explicit and imperative that no "plaintiff" shall be heard to support his claim or right in that court by his own testimony, and that his testimony shall not be used against the government? It seems to me that these questions must be answered in the affirmative. Under what rule, then, can Clark be a competent witness in his own behalf? How can his testimony be received against the government, without utterly disregarding the plainly expressed will of that department, which has the power to declare the conditions upon which the United States may be sued by the citizen?

With entire respect for the opinion of my brethren, I submit that the construction which the court places upon the act of June 25, 1868, seems to fall very little short of judicial legislation.

It is said that the utmost which can be claimed for the act is that it prescribes the general common-law rule, that a party cannot testify in his own behalf, and that this case comes within one of the recognized exceptions to that rule. In support of that position, we are referred to sects. 348–350 of 1st Greenleaf's Evidence. But neither they nor the authorities cited in the notes prove what is claimed for them. That eminent text-writer says that "the oath *in litem* is admitted in two classes of cases: first, when it has been already proved that the party against whom it is offered has been guilty of some *fraud or other tortious and unwarrantable act*

of intermeddling with the complainant's goods, and no other evidence can be had of the amount of damage; and, secondly, where, on general grounds of policy, it is deemed essential to the purposes of justice." An example of the first class is the case cited in *East India Company* v. *Evans et al.*, 1 Vern. 306, where a man ran away with a casket of jewels. The injured party was allowed to testify *in odium spoliatoris*. Another case, of the same class, is *Herman* v. *Drinkwater*, 1 Me. 27, where the plaintiff shipped a trunk and two boxes on a brig then in the port of London, of which the defendant was master. The latter undertook to transport them to New York. The plaintiff, desiring to accompany them, engaged passage for himself in the same vessel, and sent on board his clothes and other baggage necessary for his accommodation. The defendant sailed without him, and on the voyage to New York broke open the trunk and rifled it of its contents. The plaintiff, in an action against the master, was held to be a competent witness, in his own behalf, to prove the contents of the trunk. It will not be pretended that the case now before us is within the first class just stated. The United States was not guilty of any fraud or tortious act whereby Clark lost the funds intrusted to him.

Nor can this case, consistently with the authorities, be embraced in the second class, familiar examples of which are actions against innkeepers, stable-keepers, and common carriers. Such actions always proceed upon the theory that the defendant was guilty of some fraud or negligence or breach of trust, whereby the plaintiff lost his property. Upon grounds of public policy the latter was sometimes allowed, at common law, to prove by his own oath certain facts essential to a recovery, no other evidence being attainable. To this head may be referred, says Mr. Greenleaf, the admission of the party robbed, as a witness for himself, in an action against the hundred, upon the Statute of Winton. But that action was authorized upon the ground that the hundred was guilty of some wrong or negligence whereby the plaintiff had received the injury complained of. Nothing of that kind can be predicated of the government in a case like this. No element of wrong or fraud or negligence on its part can exist in any action

instituted under the act of May 9, 1866. Paymaster Clark was intrusted with public funds for disbursement, and their loss was not caused by the neglect of any other government officer. By the law then in force, he was responsible for them, although they had been feloniously taken from him. *United States* v. *Prescott et al.*, 3 How. 578. Congress, in 1866, influenced doubtless by the hardship of special cases, perhaps of this particular case, enabled disbursing officers to obtain a credit for government funds taken from them, without fault or negligence on their part. A subsequent statute, however, declares that no testimony given by a plaintiff in the Court of Claims against the United States shall be used. Whatever exceptions to the common-law rule public policy or necessity has established, the terms of the act of June 25, 1868, exclude all possibility of exceptions to the rule which it prescribes. In the Court of Claims no plaintiff can testify against the United States in support of his claim or right. So reads the statute; and it is, I submit, the duty of this court to obey it, leaving to Congress to make such changes in the rules of evidence as its views of public policy may suggest. It may be unfortunate for Clark if he be denied an opportunity to testify to the amount of his loss; but, as said by Lord Campbell, "it is the duty of all courts of justice to take care, for the general good of the community, that hard cases do not make bad law." *East India Company* v. *Paul*, 7 Moo. P. C. C. 111.

I dissent also from that portion of the opinion which overrules the plea of limitation interposed by the government.

The act of March 3, 1863 (12 Stat. 765, re-enacted in Rev. Stat., sect. 1069), declares that "every claim against the United States, cognizable by the Court of Claims, shall be for ever barred, unless the petition setting forth the statement of the claim be filed . . . within six years after the claim first accrues."

Immediately upon the passage of the act of May 9, 1866, Clark had the right to proceed in that court, but he did not file his petition until April 12, 1873. "In general, it may be said that it is a rule in courts of equity as well as in courts of law, that the cause of action or suit arises when and as soon as the party has a right to apply to the proper tribunals

for relief." Angell, Lim. 37, c. 6, sect. 42; 2 Story, Eq. Jur., sect. 1521 *a*.

This court holds that Clark's suit was not the assertion of a "claim," within the meaning of the limitation clause of the act of 1863. From that construction I dissent.

Clark resorted to the Court of Claims under the authority of an act which, as already suggested, entitles the demand for relief under its provisions as a "claim," and in his affidavit to the petition he speaks of his demand as a "claim," and of himself as a "claimant." The Revised Statutes, following that act, designate such a demand as a "claim," and give the Court of Claims jurisdiction of "all claims founded upon any act of Congress." In every just sense, this claim is so founded.

Clark, in order to obtain relief from responsibility for the funds in question, was required to present to the proper accounting officers a decree of the Court of Claims, directing that he should receive credit for the amount taken from him by the alleged robbery. It was not, therefore, a misuse of words for Congress to describe a demand for relief under the act of 1866 as a "claim." If a "claim," it was clearly barred, unless it did not accrue until the credit which Clark had given himself in his report was rejected at the treasury in 1871; but, unquestionably, his crediting himself with the amount taken from him by the robbery was an unauthorized act. The accounting officers could not, except in pursuance of a decree of the Court of Claims, lawfully admit such a credit; and their failure to promptly disallow it did not give him any additional right, nor deprive the government of any right which it possessed. Neither his nor their action could suspend the running of the Statute of Limitations. His claim, therefore, accrued immediately upon the passage of the act of May 9, 1866. Not having been asserted by suit within six years from that date, it was barred.

I am of opinion that the judgment should be reversed, with directions to dismiss the petition.

CROMWELL v. COUNTY OF SAC.

COUNTY OF SAC v. CROMWELL.

1. An overdue and unpaid coupon for interest, attached to a municipal bond which has several years to run, does not render the bond and the subsequently maturing coupons dishonored paper, so as to subject them, in the hands of a purchaser for value, to defences good against the original holder.
2. A *bona fide* purchaser of negotiable paper for value, before maturity, takes it freed from all infirmities in its origin, unless it is absolutely void for want of power in the maker to issue it, or its circulation is by law prohibited by reason of the illegality of the consideration. Municipal bonds, payable to bearer, are subject to the same rules as other negotiable paper.
3. Though he may have notice of infirmities in its origin, a purchaser of a municipal bond from a *bona fide* holder, who obtained it for value before maturity, takes it as freed from such infirmities as it was in the hands of such holder.
4. A purchaser of negotiable securities before their maturity, whatever may have been their original infirmity, can, unless he is personally chargeable with fraud in procuring them, recover against the maker the full amount of them, though he may have paid therefor less than their par value.
5. When, at the place of contract, the rate of interest differs from that at the place of payment, the parties may stipulate for either rate, and the contract will govern.
6. Under the law of Iowa, municipal bonds in that State drawing ten per cent interest before maturity draw the same interest thereafter, and matured coupons attached to them draw six per cent. Judgments there rendered upon such bonds and coupons draw interest on the amount due on the bonds at the rate of ten per cent a year, and on that due on the coupons at the rate of six per cent a year.

ERROR to the Circuit Court of the United States for the District of Iowa.

This action was brought by Cromwell upon four bonds of the County of Sac, in the State of Iowa, each for $1,000, and four interest coupons attached to them, each for $100. The bonds were issued on the 1st of October, 1860, and made payable to bearer on the 1st of May, in the years 1868, 1869, 1870, and 1871, respectively, at the Metropolitan Bank, in the city of New York, with annual interest at the rate of ten per cent a year. The coupons in suit matured after the 1st of May, 1868. They were, at the option of the holder, payable at that bank, or receivable for county taxes at the office of the treasurer of Sac County.

As a defence, the county relied upon the estoppel of a judgment rendered in its favor in a prior action, brought by one Samuel C. Smith upon certain earlier maturing coupons upon the same bonds, accompanied with proof that Cromwell was, at the time, the owner of those coupons, and that the action was prosecuted for his benefit. It appears, from the findings in that action, that the County of Sac authorized, by a vote of its people, the issue of bonds to the amount of $10,000, for the erection of a court-house; that they were issued by the county judge, and delivered to one Meserey, with whom he had made a contract for the erection of the court-house; that immediately thereafter the contractor gave one of the bonds as a gratuity to the county judge; that a court-house was never constructed by the contractor or any other person pursuant to the contract; and that the plaintiff became the holder before maturity of the coupons in controversy, but it does not appear that he gave any value for them. Upon these findings the court below decided that the bonds were void as against the county, and accordingly gave judgment in its favor upon the coupons, holding that any infirmity of the bonds, by reason of illegality or fraud in their issue, necessarily affected the coupons attached to them. When that case was brought here on a writ of error, this court held that the facts disclosed by the findings were sufficient evidence of fraud and illegality in the inception of the bonds to call upon the holder to show, not only that he had received the coupons before maturity, but that he had given value for them; and, not having done so, the judgment was affirmed. *Smith* v. *Sac County*, 11 Wall. 139.

When the present case was first tried, the court below, holding that the judgment in the Smith case was conclusive against Cromwell, excluded proof of his receipt of the bonds and coupons in this suit before maturity for value, and gave judgment for the county. But when the case was brought here at the last term, this court held that the court below erred in excluding this proof; and that the point adjudged in the Smith case was only that the bonds were void as against the county in the hands of parties who had not thus acquired them before maturity and for value. The judgment was accordingly reversed,

and the cause remanded for a new trial. *Cromwell* v. *County of Sac*, 94 U. S. 351.

Upon the second trial, the plaintiff proved that he had received, before their maturity, the bonds payable in 1870 and 1871, with coupons attached, and given value for them, without notice of any defence to them on the part of the county.

As to the bonds payable in 1868 and 1869, and coupons annexed, it appears that the plaintiff purchased them from one Clark on the 1st of April, 1873, after their maturity, for the consideration of a precedent debt due to him from Clark, amounting to $1,500; that they had previously been held by one Robinson, who had pledged them to a bank in Brooklyn as collateral security for a loan of money; that Clark purchased them of Robinson on the 20th of May, 1863, by paying this loan to the bank, then amounting to $1,192, and applying the excess of the amount of the bonds over the amount thus paid, in satisfaction of a precedent debt due to him by Robinson. To each of these bonds there were attached, at the time of Clark's purchase, the coupon due May 1, 1863, and all the unmatured coupons. Robinson stated to Clark that the coupons previously matured had been paid, and that those due on the first of the month would be paid in a few days. Clark had no notice at the time of any defence to the bonds, except such as may be imputed to him from the fact that one of the coupons attached to each of the bonds was then past due and unpaid. There was a special verdict referring to the judgment in *Smith* v. *Sac County*, and showing the facts above stated as to the purchase of the bonds and coupons.

The law of New York allows interest at the rate of seven per cent a year, and any agreement for a greater rate avoids the whole contract. The law of Iowa provides that the rate of interest shall be six per cent a year on money due by express contract, where a different rate is not stipulated, and on judgments and decrees for the payment of money; but that parties may agree in writing for the payment of interest not exceeding ten per cent a year, and that in such case any judgment or decree thereon shall draw interest at the rate expressed in the contract.

The main questions determined in the court below — such, at

least, as are deemed sufficiently important to be here noticed—were, in substance, these: 1st, Whether the judgment in *Smith* v. *Sac County* barred a recovery by Cromwell; 2d, whether as to the bonds maturing in 1868 and 1869, and the coupons annexed, he had the rights of a holder for value before dishonor, and without notice of any defence to them; 3d, whether, if entitled to recover on the bonds and coupons, he should be allowed interest on them after maturity at the rate prescribed by the law of New York, or by that of Iowa; and, 4th, whether the judgment should bear interest at the rate of ten, or only six, per cent a year.

The judges of the Circuit Court were divided in opinion on these questions. Conformably to the opinion of the presiding judge, who held that the bonds which matured in 1868 and 1869, and the coupons thereto attached, were, when purchased by Clark, dishonored paper, judgment, bearing six per cent interest per annum, was entered in favor of Cromwell, only for the amount mentioned in the bonds which matured in 1870 and 1871, and the coupons annexed, with interest on them at seven per cent a year after maturity. This judgment is now brought here for review, each party having sued out a writ of error.

Mr. John N. Rogers for Cromwell.

A purchaser for value of an unmatured negotiable bond, with an overdue coupon attached thereto, does not take it as dishonored paper, subject to all defences good against the original holder. *Bass* v. *Hewitt*, 20 Wis. 260; *National Bank of North America* v. *Kirby*, 108 Mass. 497; *Brooks* v. *Mitchell*, 9 Mee. & W. 15; *Goodman* v. *Simonds*, 20 How. 343; *Murray* v. *Lardner*, 2 Wall. 110; *Goodman* v. *Harvey*, 4 Ad. & E. 870; *Burnham* v. *Brown*, 23 Me. 400; *Oridge* v. *Sherborne*, 11 Mee. & W. 374; *Grafton Bank* v. *Doe*, 19 Vt. 463; *Ferry* v. *Ferry*, 2 Cush. (Mass.) 92; *United States* v. *Union Pacific Railroad Co.*, 91 U. S. 72; *Miller* v. *Race*, 1 Burr. 452; S. C. 1 Sm. L. C. 597 and notes.

If the rate of interest where the contract is made differs from that at the place of payment, the agreement of the parties for either rate is valid. *Miller* v. *Tiffany*, 1 Wall. 298; *Depau* v. *Humphreys*, 8 Mart. (La.) 1; *Chapman* v. *Robertson and*

Others, 6 Paige (N. Y.), 627; *Peck* v. *Mayo*, 14 Vt. 33; *Butters* v. *Olds et al.*, 11 Iowa, 1.

Under the Iowa statute which governs this case, the bonds after maturity bear interest at ten per cent per annum. *Hand* v. *Armstrong*, 18 Iowa, 324; *Lucas, Thompson, & Co.* v. *Pickel*, 20 id. 490. In the States where a similar statute prevails, the decisions are to the same effect. *Brannon* v. *Hursell*, 112 Mass 63; *Marietta Iron Works* v. *Lottimer*, 25 Ohio St. 621; *Mouett* v *Sturges*, id. 384; *Kilgore* v. *Powers*, 5 Blackf. (Ind.) 22; *Phinney* v. *Baldwin*, 16 Ill. 108; *Etnyre* v. *McDaniel*, 28 id. 201; *Spencer* v. *Maxfield*, 16 Wis. 178, 541; *Pruyn* v. *The City of Milwaukee*, 18 id. 367; *Kohler* v. *Smith*, 2 Cal. 597; *McLane* v. *Abrams*, 2 Nev. 199; *Hopkins* v. *Crittenden*, 10 Tex. 189 *Miller* v. *Burroughs*, 4 Johns. (N. Y.) Ch. 436; *Van Buren* v *Van Gaasbeck*, 4 Cow. (N. Y.) 496.

The judgment and the bonds bear the same rate of interest. *Marietta Iron Works* v. *Lottimer*, *supra*; *McLane* v. *Abrams*, *supra*; *Henry* v. *Ward*, 4 Ark. 150. But if it be otherwise, then the rate of six per cent applies only to so much of the judgment as was rendered on the coupons.

Cromwell, as the purchaser before their maturity of the bonds falling due in 1870 and 1871, and without notice of any defences which might impair their validity, and as the purchaser from a *bona fide* holder of the remaining bonds, who, before they matured, bought them without notice of any infirmity, is not limited to recovering the sum he paid therefor, but is entitled to the full amount due thereon, according to their tenor and effect. *Lay* v. *Wissman*, 36 Iowa, 305; *National Bank of Michigan* v. *Green*, 33 id. 140; *Park Bank* v. *Watson*, 42 N. Y. 490; *Fowler* v. *Strickland*, 107 Mass. 552.

Mr. Galusha Parsons for the county.

Negotiable paper is dishonored by any breach of the engagement which it imports. *McClure* v. *Township of Oxford*, 94 U. S. 429; *Vinton* v. *King*, 4 Allen (Mass.), 562; *Newell* v. *Gregg*, 51 Barb. (N. Y.) 263; *First National Bank of St. Paul* v. *County Commissioners*, 14 Minn. 77; *Arents* v. *Commonwealth*, 18 Gratt. (Va.) 750.

The past-due coupons attached to the bonds maturing in 1868 and 1869 were notice to Clark, the purchaser, that the

paper was dishonored, and the plaintiff did not acquire the other bonds in the ordinary or usual course of business. *Suidam* v. *Williamson et al.*, 20 How. 428; *Vermilye & Co.* v. *Adams Express Co.*, 21 Wall. 138; *McClure* v. *Township of Oxford*, *supra*; *Collins* v. *Gilbert*, 94 U. S. 753; *Shirts* v. *Overjoh*, 60 Mo. 305; *Davis* v. *Bartlett & St. John*, 12 Ohio St. 534.

The plaintiff, if entitled to recover, is limited to the amount paid by him, with interest. *Moore* v. *Ryder*, 65 N. Y. 441; *Cardwell* v. *Hicks*, 37 Barb. (N. Y.) 458; Story, Prom. Notes, sect. 191; Daniel, Neg. Ins., sect. 758; Chitty, Bills, 677; *Huff* v. *Wagner*, 63 Barb. (N. Y.) 229; *Todd* v. *Shelbourne*, 8 Hun (N. Y.), 510; *Campbell* v. *Nicholls*, 4 Vroom (N. J.), 81.

Interest on the bonds and coupons, after maturity and before judgment, was computed at an improper rate. *Brewster* v. *Wakefield*, 22 How. 118; *Young* v. *Godbe*, 15 Wall. 562; *Goddard* v. *Foster*, 17 id. 123; *Ward* v. *Morrison*, Car. & M. 367. The judgment bears interest at the true rate. *Hamer* v. *Kirkwood*, 25 Miss. 95; *Rogers* v. *Lee County*, 1 Dill. 529.

MR. JUSTICE FIELD, after stating the case, delivered the opinion of the court.

It appears that, on the second trial of this case, the plaintiff proved that he had received two of the bonds in suit, — those payable in 1870 and 1871, — with coupons attached, before their maturity, and given value for them, without notice of any defence to them on the part of the county. Under our ruling, when the case was first here, there can be no doubt of his right to recover upon them. The only questions for our determination as respects them relate to the interest which they shall draw after maturity, and the interest which the judgment shall bear. These questions we shall hereafter consider.

As to the other two bonds in suit, — those payable in 1868 and 1869, — and coupons annexed, it appears that when Clark purchased them, on the 20th of May, 1863, there were attached to each the coupon due on the first of that month and all subsequent unmatured coupons. His vendor stated to him that the coupons previously matured had been paid, and that those due on the first of the month would be paid in a few days. He

had no notice at the time of any defence to the bonds, except such as may be imputed to him from the fact that one of the coupons attached to each of the bonds was then past due and unpaid. And the principal question for our determination is, whether, this fact existing, the plaintiff had, as to these bonds, the right of a holder for value before dishonor, without notice of any defences by the county; or, as stated by counsel, whether this fact rendered the bonds themselves, and all subsequently maturing coupons, dishonored paper, and subjected them, in the hands of Clark and the plaintiff succeeding to his rights, to all defences good against the original holder. The judges of the Circuit Court were divided in opinion upon this question; and, as in such cases the opinion of the presiding judge prevails, the decision of the court was against the plaintiff, and he was held to have taken the bonds and subsequent coupons as dishonored paper, subject to all the infirmities which could be urged against them in the hands of the original holder. In this decision we think the court erred. The special verdict does not show that the coupons overdue had been presented to the Metropolitan Bank for payment, and their payment refused. Assuming that such was the fact, the case is not changed. The non-payment of an instalment of interest when due could not affect the negotiability of the bonds or of the subsequent coupons. Until their maturity, a purchaser for value, without notice of their invalidity as between antecedent parties, would take them discharged from all infirmities. The non-payment of the instalment of interest represented by the coupons due at the commencement of the month in which the purchase was made by Clark was a slight circumstance, and, taken in connection with the fact that previous coupons had been paid, was entirely insufficient to excite suspicion even of any illegality or irregularity in the issue of the bonds. Obligations of municipalities in the form of those in suit here are placed, by numerous decisions of this court, on the footing of negotiable paper. They are transferable by delivery, and, when issued by competent authority, pass into the hands of a *bona fide* purchaser for value before maturity, freed from any infirmity in their origin. Whatever fraud the officers authorized to issue them may have committed in disposing of them, or however entire may have been the fail-

ure of the consideration promised by parties receiving them, these circumstances will not affect the title of subsequent *bona fide* purchasers for value before maturity or the liability of the municipalities. As with other negotiable paper, mere suspicion that there may be a defect of title in its holder, or knowledge of circumstances which would excite suspicion as to his title in the mind of a prudent man, is not sufficient to impair the title of the purchaser. That result will only follow where there has been bad faith on his part. Such is the decision of this court, and substantially its language, in the case of *Murray* v. *Lander*, reported in the 2d of Wallace, where the leading authorities on the subject are considered.

The interest stipulated was a mere incident of the debt. The holder of the bond had his option to insist upon its payment when due, or to allow it to run until the maturity of the bond; that is, until the principal was payable. Many causes may have existed for a failure to meet the interest as it matured, entirely independent of the question of the validity of the bonds in their inception. The payment of previous instalments of interest would seem to suggest that only causes of a temporary nature had prevented their continued payment. If no instalment had been paid, and several were past due, there might have been greater reason for hesitation on the part of the purchaser to take the paper, and suspicions might have been excited that something was wrong in issuing it. All that we now decide is, that the simple fact that an instalment of interest is overdue and unpaid, disconnected from other facts, is not sufficient to affect the position of one taking the bonds and subsequent coupons before their maturity for value as a *bona fide* purchaser. *National Bank of North America* v. *Kirby*, 108 Mass. 497. To hold otherwise would throw discredit upon a large class of securities issued by municipal and private corporations, having years to run, with interest payable annually or semi-annually. Temporary financial pressure, the falling off of expected revenues or income, and many other causes having no connection with the original validity of such instruments, have heretofore, in many instances, prevented a punctual payment of every instalment of interest on them as it matured; and similar causes may be expected to prevent a punctual payment

of interest in many instances hereafter. To hold that a failure to meet the interest as it matures renders them, though they may have years to run, and all subsequent coupons dishonored paper, subject to all defences good against the original holders, would greatly impair the currency and credit of such securities, and correspondingly diminish their value. We are of opinion, therefore, that Clark took the two bonds in suit and the subsequently maturing coupons as a *bona fide* purchaser, and as such was entitled to recover upon them, whatever may have been their original infirmity. The plaintiff, Cromwell, succeeded by his purchase from Clark to all Clark's rights, and can enforce them to the same extent. Nor does it matter whether, in the previous action against the county by Smith, who represented him, he was informed of the invalidity of the bonds as against the county, and knew, when he purchased, the circumstances attending their issue, or whether he was made acquainted with them in any other way. The rule has been too long settled to be questioned now, that, whenever negotiable paper has passed into the hands of a party unaffected by previous infirmities, its character as an available security is established, and its holder can transfer it to others with the like immunity. His own title and right would be impaired if any restrictions were placed upon his power of disposition. This doctrine, as well as the one which protects the purchaser without notice, says Story, "is indispensable to the security and circulation of negotiable instruments, and it is founded on the most comprehensive and liberal principles of public policy." Story, Prom. Notes, sect. 191. The only exceptions to this doctrine are those where the paper is absolutely void, as when issued by parties having no authority to contract; or its circulation is forbidden by law from the illegality of its consideration, as when made upon a gambling or usurious transaction.

The plaintiff, therefore, holds the bonds and the subsequent coupons as his vendor held them, freed from all infirmities attending their original issue. Nor is he limited in his recovery upon them, or upon the other two bonds, as contended by counsel for the county, to the amount he paid his vendor. Clark had given full value for those he purchased, and could have recovered their amount from the county, and his right passed to

his vendee. But, independently of the fact of such full payment, we are of opinion that a purchaser of a negotiable security before maturity, in cases where he is not personally chargeable with fraud, is entitled to recover its full amount against its maker, though he may have paid less than its par value, whatever may have been its original infirmity. We are aware of numerous decisions in conflict with this view of the law; but we think the sounder rule, and the one in consonance with the common understanding and usage of commerce, is that the purchaser, at whatever price, takes the benefit of the entire obligation of the maker. Public securities, and those of private corporations, are constantly fluctuating in price in the market, one day being above par and the next below it, and often passing within short periods from one-half of their nominal to their full value. Indeed, all sales of such securities are made with reference to prices current in the market, and not with reference to their par value. It would introduce, therefore, inconceivable confusion if *bona fide* purchasers in the market were restricted in their claims upon such securities to the sums they had paid for them. This rule in no respect impinges upon the doctrine that one who makes only a loan upon such paper, or takes it as collateral security for a precedent debt, may be limited in his recovery to the amount advanced or secured. *Stoddard* v. *Kimball*, 6 Cush. (Mass.) 469; *Allaire* v. *Hartshorne*, 1 Zab. 665; *Williams* v. *Smith*, 2 Hill (N. Y.), 301; *Chicopee Bank* v. *Chapin*, 8 Met. (Mass.) 40; *Lay* v. *Wissman*, 36 Iowa, 305.

The only questions remaining, which we deem of sufficient importance to require consideration, relate to the interest which the bonds and coupons in suit shall draw after their maturity, and the interest which the judgment shall bear. The statute of Iowa on this subject provides that the rate of interest shall be six per cent a year on money due by express contract, unless a different rate be stipulated, and on judgments and decrees for the payment of money in such cases; but that parties may agree in writing for any rate of interest not exceeding ten per cent a year, and that any judgment or decree thereon shall draw the rate of interest expressed in the contract.

The bonds by their terms, as already stated, bear interest at

the rate of ten per cent until maturity. The plaintiff claims that they should draw the same rate of interest after maturity, and that, under the statute of Iowa, the judgment should also bear ten per cent interest. The court below allowed only seven per cent on the bonds after maturity, that being the rate in New York, where the bonds were payable, and only six per cent on the judgment. In this ruling, we think the court erred. By the settled law of Iowa, as established by repeated decisions of her highest court, contracts drawing a specified rate of interest before maturity draw the same rate of interest afterwards. *Hand* v. *Armstrong*, 18 Iowa, 324; *Lucas, Thompson, & Co.* v. *Pickel*, 20 id. 490. A like decision has been made in several of the States upon similar statutes. *Brannon* v. *Hursell*, 112 Mass. 63; *Marietta Iron Works* v. *Lottimer*, 25 Ohio St. 621; *Monett* v. *Sturges*, id. 384; *Kilgore* v. *Powers*, 5 Blackf. (Ind.) 22; *Phinney* v. *Baldwin*, 16 Ill. 108; *Etnyre* v. *McDaniel*, 28 id. 201; *Spencer* v. *Maxfield*, 16 Wis. 178, 541; *Pruyn* v. *The City of Milwaukee*, 18 id. 367; *Kohler* v. *Smith*, 2 Cal. 597; *McLane* v. *Abrams*, 2 Nev. 199; *Hopkins* v. *Crittenden*, 10 Tex. 189. There are, however, conflicting decisions; but the preponderance of opinion is in favor of the doctrine that the stipulated rate of interest attends the contract until it is merged in the judgment. *Pearce* v. *Hennessey*, 10 R. I. 223; *Lash* v. *Lambert*, 15 Minn. 416; *Searle and Others* v. *Adams*, 3 Kan. 515; *Kitchen et al.* v. *The Branch Bank at Mobile*, 14 Ala. 233. The statutory rate of six per cent in Iowa only applies in the absence of a different stipulated rate. As the judgment in case of a stipulated interest in the contract must bear the same rate, it could not have been intended that a different rate should be allowed between the maturity of the contract and the entry of the judgment.

The case of *Brewster* v. *Wakefield* (22 How. 118) is cited against this view. That case came from a territorial court, and arose under a statute which allowed parties to agree upon any rate of interest, however exorbitant, and only prescribed seven per cent in the absence of such agreement. This court, bound by no adjudication of the territorial court, and looking with disfavor upon the devouring character of the interest stipulated in that case, gave a strict construction to the contract of the parties.

"The law of Minnesota" (then a Territory), said the court, "has fixed seven per cent per annum as a reasonable and fair compensation for the use of money; and when a party desires to extort, from the necessities of a borrower, more than three times as much as the legislature deems reasonable and just, he must take care that the contract is so written in plain and unambiguous terms; for with such a claim he must stand on his bond." The statute of Iowa only allows the parties by their agreement to stipulate for interest up to ten per cent a year, — a rate which has not been deemed extravagant or unreasonable in any of the States lying west of the Mississippi. Be that as it may, the question is one of local law under a statute of a State, and the construction given by its tribunals should conclude us.

The position of counsel, that because the rate of interest in New York, where the bonds were payable, is only seven per cent, the bonds can only draw that rate after maturity, is not tenable. When the rate of interest at the place of contract differs from the rate at the place of payment, the parties may contract for either rate, and the contract will govern. *Miller* v. *Tiffany*, 1 Wall. 298; *Depau* v. *Humphreys*, 8 Mart. (La.) 1; *Chapman* v. *Robertson*, 6 Paige (N. Y.), 627, 634; *Peck* v. *Mayo*, 14 Vt. 33; *Butters* v. *Olds et al.*, 11 Iowa, 1. The bonds were made with reference to the law of Iowa as to interest, and not to that of New York, where interest above seven per cent is deemed usurious and avoids the whole contract. The obligor is a municipal corporation of Iowa, the bonds were deliverable in that State, and proceedings to enforce their payment could only be had in courts sitting there.

With reference to interest on the coupons after their maturity, that can be allowed only at the rate of six per cent under the law of Iowa. See, as to coupons drawing interest, *Aurora City* v. *West*, 7 Wall. 82.

It follows, from the views expressed, that the plaintiff was entitled to judgment for the amount of the four bonds and the coupons in suit, with interest on the bonds after maturity until judgment at the rate of ten per cent a year, and with interest on the coupons after their maturity until judgment at the rate of six per cent a year; and that the judgment should draw

interest at the rate of ten per cent a year upon the amount found due on the bonds, and at the rate of six per cent a year upon the amount found due on the coupons, including the costs of the action.

The judgment of the Circuit Court must, therefore, be reversed, and the cause remanded with directions to enter a judgment for the plaintiff in conformity with this opinion; and it is

So ordered.

TURNPIKE COMPANY v. ILLINOIS.

1. By analogy to the rule of the common law, that a grant to a natural person, without words of inheritance, creates only an estate for his life, a grant of a franchise, without words of perpetuity, to a corporation aggregate, whose duration is limited, creates only an estate for its life.
2. By an act of the legislature of Illinois, approved Feb. 13, 1847, a turnpike company was created a body corporate, to continue as such for twenty-five years from that date, with power to construct and maintain a certain turnpike, erect toll-gates, and collect tolls. The State reserved the right to purchase the road at the expiration of the charter, by paying to the corporation the original cost of construction; but the road, with all its appendages, was to remain in the possession of the corporation, to be used and controlled, subject to the rights and restrictions contained in the charter, until such time as the State should refund said cost. By a supplement passed in 1861, the company was authorized to extend its road; and, in consideration of keeping in repair a certain bridge and dyke, to use them as a part of the road, erect a toll-gate thereon, and collect tolls. The responsibility of the company did not, however, extend to the destruction of the dyke by high floods. *Held*, 1. That the provision whereby, on the failure of the State, at the expiration of twenty-five years, to refund the original cost of the road, the company was authorized to continue in the exercise of its franchises until they should be redeemed by paying such cost, extended only to the charter, and not to the supplement of 1861. 2. That the supplement merely granted to the company the use of the bridge and dyke, and that the franchise to charge tolls thereon was separate and distinct from that authorizing the collection of them on the original road, and did not extend beyond the term of years for which the corporation had been created. 3. That, at the expiration of that term, the State, by resuming the control of the bridge and dyke without compensation to the company, did not impair the obligation of her contract with the company.
3. *Quære*, Whether, if the company had been authorized to construct the bridge and dyke, and had done so, or to acquire a proprietary interest in the property in fee, and had acquired it, the State could have taken back the property without just compensation.
4. A grant of franchises and special privileges is to be construed most strongly against the donee and in favor of the public.

ERROR to the Supreme Court of the State of Illinois.

This was a proceeding by information in the nature of a *quo warranto*, instituted on the 13th of October, 1873, in the St. Clair County Circuit Court, Illinois, by the people of the State of Illinois, on the relation of one Bowman, against the St. Clair County Turnpike Company, charging it with unlawfully holding and exercising, without warrant therefor, the franchise of maintaining a toll-gate near Cahokia Creek, upon a street in the city of East St. Louis, called Dyke Avenue, and collecting tolls for passing through the same on said street. The company justified under its charter, or act of incorporation, and several supplements thereto. The plaintiff replied that the land occupied by Dyke Avenue had been dedicated by the owners thereof to the city of East St. Louis, as a public street, and that the legislature, by an act passed March 26, 1869, had granted to the said city exclusive power and control over said Dyke Avenue, and imposed upon it the sole right and duty of grading, filling up, paving, sewering, and otherwise improving and keeping said street in repair, and the right to abate and remove obstructions therefrom. The company demurred, and insisted that this last-mentioned act of the legislature impaired the obligation of the contract made with itself in and by its said charter and the supplements thereto. The County Court, and the Supreme Court of the State, on appeal, held the justification of the company to be insufficient, and gave judgment of ouster.

The company then sued out this writ of error.

The statutes of Illinois bearing upon the question are set forth in the opinion of the court.

Mr. John W. Noble and *Mr. John C. Orrick* for the plaintiff in error.

The object of the supplement to the charter was to confer a benefit on the company, and, upon the same terms, to add to the franchises previously existing. *Pruffett et al.* v. *Great Western Railroad Co.*, 25 Ill. 353; *Commonwealth* v. *Hancock Free Bridge Co.*, 2 Gray (Mass.), 58; *Attorney-General* v. *Germantown, &c. Turnpike Co.*, 55 Pa. St. 466; *Canal Bridge* v. *Gordon*, 1 Pick. (Mass.) 297; *Willink* v. *Morris Canal*, 3 Green (N J.), Ch. 377.

Admitting that the right granted to the corporation by the

supplement of 1861 was that of the toll-gate on Dyke Avenue, that right, by virtue of the seventeenth section of the charter, continued as long as the corporation; and its purchase by the State was as much a condition precedent to its extinguishment as is the purchase of any other right conferred by the charter. An attempt to extinguish it in any other manner impairs the obligation of the contract contained in the charter, and is unconstitutional and void.

Mr. James K. Edsall, Attorney-General of Illinois, *contra*.

If the Supreme Court of Illinois was correct in its construction of the act of 1847, and that of 1861, the franchise to collect tolls on Dyke Avenue expired in 1872; and this court will not inquire whether that construction was correct or not. *Insurance Company* v. *The Treasurer*, 11 Wall. 204; *Kennebec Railroad* v. *Portland Railroad*, 14 id. 23.

The construction given to those acts was the true one. Sedgwick, Const. Law, 338, 339, 342; Angell, Highways, 358; Angell & Ames, Corp. 66; 2 Kent, Com. 276, 298; *Pennsylvania Railroad Co.* v. *Canal Com'rs*, 21 Pa. 9; *Canisius* v. *Merril*, 65 Ill. 67; *Chesnutwood* v. *Hood*, 68 id. 132; *Charles River Bridge* v. *Warren Bridge et al.*, 11 Pet. 420; *Dubuque & Pacific Railroad Co.* v. *Litchfield*, 23 How. 66; *Stormfellz* v. *Turnpike Company*, 13 Pa. St. 555.

MR. JUSTICE BRADLEY delivered the opinion of the court.

The question before us is, whether any contract was set up by the defendant company, now plaintiff in error, in its justification, which has been impaired by the subsequent legislation of the State.

The charter of the company, as set out in its plea of justification, was an act of the legislature of Illinois, approved Feb. 13, 1847, entitled "An Act to incorporate the Saint Clair County Turnpike Company."

By the first section of this act it was enacted as follows: —

"That all such persons as shall become stockholders, agreeably to the provisions of this act, in the corporation hereby created, shall, and for the term of twenty-five years from and after the passage of this act, continue to be a body corporate and politic, by the name of 'St. Clair County Turnpike Company,' and by that name shall have

succession for the term of years above specified; may sue and be sued, complain and defend, in any court of law or equity; may make and use a common seal," &c., conferring the usual corporate powers.

By the second section it was enacted as follows: —

"The said corporation shall have the right to construct and maintain a turnpike road from the bank of the Mississippi River opposite the city of St. Louis, to High Street, in Belleville, St. Clair County, Illinois; said road to be made on the great western mail route."

Provision was then made for erecting certain toll-gates on the line of the road, and a schedule of tolls was prescribed.

The fifteenth section of the charter is in the following words: —

"The State reserves the right to purchase said road at the expiration of said charter, by paying to said corporation the original cost of said road, laid out and expended in constructing the same, to be ascertained by examination of the books of said corporation, by commissioners to be appointed by the legislature; and, in case of non-payment or redemption by the State at the expiration of the charter, the said road, with all its appendages, shall remain in the possession of said corporation, to be used, controlled, and possessed under the rights and restrictions in this charter contained, and may demand and receive tolls as herein stated, until such time as the State shall refund said sum of money, the original cost of construction, and which right the State hereby reserves."

The seventeenth and last section was as follows: —

"The corporation hereby created shall be safe and secure for and during the term of the charter, and until the road shall be redeemed by the State as provided, in all the rights, interests, and privileges granted and intended to be conferred to said company by the strict letter and meaning thereof, the corporation complying strictly, clearly, and fully on their part."

It is conceded that the original route of the turnpike, as located under the second section. did not embrace Dyke Avenue, where the toll-gate complained of has been erected. That avenue extends from Cahokia Creek to the present bank of the river, and is connected, by a bridge across Cahokia Creek. with the turnpike as originally located.

A supplement to the charter was passed Feb. 16, 1861, the second section of which was as follows:—

"The St. Clair County Turnpike Company is hereby authorized to extend their road across Cahokia Creek, using the bridge over said creek which connects the St. Clair County Turnpike Company with the dyke on Bloody Island, and over said dyke to its western shore opposite the city of St. Louis; and shall keep the road on said dyke and bridge in good repair, and build a new bridge if the present one should float away or become unsafe for travelling, but shall not be held responsible for any destruction of the dyke by high floods; and the said company is hereby authorized to erect a toll-gate on said dyke, or on or near said bridge, and collect the following rates of toll, viz.:" [Certain tolls being then prescribed.]

It is by virtue of this act that the defendant claims the right to erect and maintain the toll-gate, and to exact the tolls in question.

The term of the charter expired in 1872; but the defendant, in its plea, alleged that the State had never yet redeemed the franchises granted to it, nor paid, or offered to pay, the costs of constructing the turnpike, or attempted to exercise the right reserved in the fifteenth section of the charter. The question is, whether, by virtue of this section, the company is entitled to hold possession of and take tolls on Dyke Avenue, as well as on the original line of its road. The Supreme Court of Illinois held that it is not entitled to do so as against the State, or as against the city of East St. Louis, claiming under the authority of the State. It held that the dyke and the bridge over Cahokia Creek never became the property of the corporation: that their use merely was granted to it; so that it cannot be said that they form a part of the road constructed by the corporation, which the State, in electing to take its road, would have to pay for; that the franchise of charging tolls for their use is entirely distinct and separate from the franchise of charging tolls for the use of the road constructed by the corporation; and that the fair construction of the act of 1861 is, that it was designed that the corporation should have the use of the bridge and dyke, with the right to charge tolls thereon, until the period fixed for the termination of the corporation and the taking of control of its road by the State, and no longer.

In this view we concur. The original charter of the company gave it the right, in consideration of building the turnpike authorized thereby, and of keeping it in repair, to erect certain toll-gates, and to exact certain tolls for the use of the turnpike, until the expiration of twenty-five years from the date of the charter, and as much longer as the State should fail to redeem the franchises so granted, by paying the cost of the work. This was undoubtedly a contract; but it related only to the turnpike then authorized to be constructed. Any donations or franchises which the State might subsequently grant to the company would stand upon their own considerations, and could not fairly be claimed as parcel of the consideration of the original contract. In 1861, when the term of the charter had more than half expired, the State gave the company a new and additional privilege; namely, the privilege of using the bridge and dyke in question, and of erecting a toll-gate thereon. The only consideration required was, that the company should keep them in repair; but should not even be responsible for any destruction of the dyke by high floods. The consideration was continuous, and correlative to the continued use. No term was expressed for the enjoyment of this privilege; and no conditions were imposed for resuming or revoking it on the part of the State. It cannot be presumed that it was intended to be a perpetual grant; for the company itself had but a limited period of existence. At common law, a grant to a natural person, without words of inheritance, creates only an estate for the life of the grantee; for he can hold the property no longer than he himself exists. By analogy to this, a grant to a corporation aggregate, limited as to the duration of its existence, without words of perpetuity being annexed to the grant, would only create an estate for the life of the corporation. In the present case, the turnpike company was created to continue a corporate body only for the term of twenty-five years from the date of its charter; and although, by necessary implication, a further continuance, with the special faculty of holding and using the turnpike authorized by the act until redeemed by the State, is given to it for that purpose, yet it is only by implication, arising from the necessity of the case, and, therefore, cannot be extended to other purposes and objects. Grants of franchises and special privi-

leges are always to be construed most strongly against the donee, and in favor of the public We think the Supreme Court of Illinois construed the grant liberally in this case, when it declared "the fair construction" to be, that it was designed the corporation should have the use of the bridge and dyke, with the right to take tolls thereon, until the period fixed for the determination of its existence; and we think that that period cannot be extended by implication beyond the prescribed term of twenty-five years, except for the purposes contained in the charter.

If the company had been authorized to construct the dyke and bridge, and had done so; or if it had been authorized to acquire a proprietary interest in the property in fee, and had acquired such interest,—the case would have had a different aspect. Then the question would have been, whether the State could have taken back the property without just compensation. But it does not arise in this case. The only question here is, whether, in resuming the possession of the bridge and dyke, by subjecting them to the control and management of the city of East St. Louis, it has passed a law impairing the obligation of a contract. We think it has not.

Judgment affirmed.

TENNESSEE v. SNEED.

1. The legislature of a State does not impair the obligation of a contract by enlarging, limiting, or altering the modes of proceeding for enforcing it, provided that the remedy be not withheld, nor embarrassed with conditions and restrictions which seriously impair the value of the right.
2. The act of the legislature of Tennessee, providing that there shall be no other remedy in any case of the collection of revenue, or attempt to collect revenue illegally, or attempt to collect revenue in funds only receivable by a collector of taxes under the law, the same being other or different funds than such as the tax-payer may tender or claim the right to pay, than by paying the tax under protest, and within thirty days thereafter suing the collector to recover it, the judgment, if for the tax-payer, to be paid in preference to other claims on the treasury, does not leave a party without an adequate remedy for asserting his right to pay his State taxes in certain bills, made receivable therefor under the charter granted to the Bank of Tennessee in the year 1838, but which bills the collector refused to accept.

ERROR to the Supreme Court of the State of Tennessee.

The facts are stated in the opinion of the court.

Mr. Robert McPhail Smith and *Mr. Philip Phillips* for the plaintiff in error.

Mr. Joseph B. Heiskell, Attorney-General of Tennessee, *contra*.

MR. JUSTICE HUNT delivered the opinion of the court.

In the month of March, 1874, Bloomstein, the relator, presented his petition to the State Circuit Court sitting at Nashville, Tenn., in which he stated that he was the owner of certain real and personal estate, which was assessed for State taxes in the year 1872 to the amount of $132.60; that he tendered to Sneed, who was collector of taxes for Davidson County, in payment of said taxes, the amount thereof in "funds receivable by law for such purposes;" that the collector refused to receive the same, but issued a warrant to his deputy to collect the amount claimed; that he has ever since been ready to make such payment, and now brings said funds into court to abide the action with respect thereto; that said funds consist of $2.60 in legal-tender currency of the United States, and $130 in bills of the Bank of Tennessee, which were issued subsequently to May 6, 1861, although some of them bear an earlier date; that the bills tendered were originally made payable in gold or silver coin, and were embraced within the twelfth section of the act chartering said bank. He prayed for an alternative writ of *mandamus* to compel the collector to receive the said bills in payment of such taxes, or to show cause to the contrary.

To this writ the defendant, in answer, showed, among others, the following causes why the writ should not issue: —

1. That the suit is expressly prohibited by the act of the General Assembly of the State passed Feb. 21, 1873, c. 13, sect. 2. 2. That it is prohibited by the act (c. 44) of the same year. 3. That the receipt of such bank-notes in payment of taxes was prohibited by the Constitution of the State of Tennessee of 1865. 4. That no such action lay at common law to enforce action by an officer in defiance of the legislative command. 8. That the notes were issued in aid of the late war against the United States.

The petition having been dismissed, the case was thereupon

taken to the Supreme Court of the State. On the 26th of May, 1875, a judgment of affirmance was rendered.

It is from this judgment that the writ of error to this court is brought.

The bank in question was chartered in the year 1838, and its charter contained, as its twelfth section, the following provision: —

"SECT. 12. Be it enacted, that the bills or notes of the said corporation originally made payable, or which shall have become payable, on demand, in gold or silver coin, shall be receivable at the treasury, and by all tax-collectors and other public officers, in all payments for taxes or other moneys due the State."

The judgment of the Supreme Court declared that the present proceeding was, virtually, a suit against the State, and that it was not maintainable prior to the act of 1855, which act was carried into the Code as sect. 2807. By this act it was provided that suits might be brought against the State "under the same rules and regulations that govern actions between private persons," and that process commencing the same might be served upon the attorneys-general of the several districts. This act was repealed in 1865, many years before the commencement of this proceeding, and again in 1873, by the acts presently to be mentioned. We have in the present action a decision of the Supreme Court of the State upon its own statutes and modes of proceeding, to the effect, 1st, that a writ of *mandamus*, in a case like the present, is a proceeding against the State; and, 2d, that it cannot be sustained in this case.

On the 28th of February, 1873, the legislature of Tennessee enacted "that no court has, or shall hereafter have, any power, jurisdiction, or authority to entertain any suit against the State, or against any officer of the State, acting by authority of the State, with a view to reach the State, its treasury funds or property; and all such suits now pending, or hereafter brought, shall be dismissed as to the State or such officer, on motion, plea, or demurrer of the law officer of the State, or counsel employed by the State."

On the 21st of March, 1873, it enacted "that in all cases in which an officer, charged by law with the collection of revenue

due the State, shall institute any proceeding, or take any steps for the collection of the same, alleged or claimed to be due by said officer from any citizen, the party against whom the proceeding or step is taken shall, if he conceives the same to be unjust or illegal, or against any statute or clause of the Constitution of the State, pay the same under protest; and, upon his making said payment, the officer or collector shall pay such revenue into the State treasury, giving notice at the time of payment to the comptroller that the same was paid under protest; and the party paying said revenue may, at any time within thirty days after making said payment, and not longer thereafter, sue the said officer having collected said sum, for the recovery thereof. And the same may be tried in any court having the jurisdiction of the amount and parties; and, if it be determined that the same was wrongfully collected, as not being due from said party to the State, for any reason going to the merits of the same, then the court trying the case may certify of record that the same was wrongfully paid and ought to be refunded; and thereupon the comptroller shall issue his warrant for the same, which shall be paid in preference to other claims on the treasury."

Sect. 2 of the act provides "that there shall be no other remedy, in any case of the collection of revenue, or attempt to collect revenue illegally, or attempt to collect revenue in funds only receivable by said officer under the law, the same being other or different funds than such as the tax-payer may tender, or claim the right to pay, than that above provided; and no writ for the prevention of the collection of any revenue claimed, or to hinder or delay the collection of the same, shall in any wise issue, either injunction, *supersedeas*, prohibition, or any other writ or process whatever; but in all cases in which, for any reason, any person shall claim that the tax so collected was wrongfully or illegally collected, the remedy for said party shall be as above provided, and in no other manner."

The act of March 25, 1873, provides "that the several tax-collectors shall receive, in discharge of the taxes and other dues to the State, bank-notes of the Bank of Tennessee, known as the old issue, warrants on the treasury legally outstanding, gold, silver, national bank-notes, and nothing else."

It is said that the acts of 1873, to which reference is made, are laws impairing the obligation of the contract contained in the twelfth section of the bank charter. This is done, it is said, not by a direct infraction of the obligation, but by placing such impediments and obstructions in the way of its enforcement, by so impairing the remedies, as practically to render the obligation of no value. This is the only point in the case involving a question of Federal jurisprudence, and the only one that it is necessary for us to consider. The question discussed by Mr. Justice Swayne, in *Walker* v. *Whitehead* (16 Wall. 314), of the preservation of the laws in existence at the time of the making of the contract, is not before us. The claim is of a subsequent injury to the contract.

There are, no doubt, many cases holding that the remedy may be so much impaired as to affect the obligation of the contract. In *Webster & Mann* v. *Rose* (6 Heisk. (Tenn.) 93), a stay-law was decided to be unconstitutional. In *Blair* v. *Williams* (4 Litt. (Ky.) 34), the same was held of a law extending the time of a replevin beyond that in existence when the contract was made.

In *Malony* v. *Fortune* (14 Iowa, 417), and in *Cargill* v. *Power* (1 Mich. 369), an extension of time for the redemption of a pre-existing mortgage was held to be unconstitutional.

In *Willard* v. *Longstreet* (2 Dougl. (Mich.) 172), a law forbidding the sale of property on execution for less than two-thirds of its appraised value was held to be unconstitutional as to pre-existing contracts.

In *Walker* v. *Whitehead* (*supra*), it is said, "Nothing is more material to the obligation of a contract than the means of its enforcement. The ideas of validity and remedy are inseparable, and both are parts of the obligation which is guaranteed by the Constitution against impairment."

These are the authorities quoted to sustain the plaintiff's theory, and the list might easily be enlarged.

On the other hand, our own reports and those of the States are full of cases holding that the legislature may alter and modify the remedy to enforce a contract without impairing its obligation. The case of *Sturges* v. *Crowninshield* (4 Wheat. 122), is among the first of the class where the question arose upon the

abolition of the right of imprisonment of the debtor as a means of compelling payment of his debt. *Mason* v. *Haile* (12 Wheat. 370) was a case of the same class. Mr. Justice Thompson says: "Imprisonment of the debtor . . . may be allowed as a means of inducing him to perform his contract; but a State may refuse to inflict this punishment, . . . and leave the contract in full force. Imprisonment is no part of the contract, and simply to release the prisoner does not impair its obligation."

On the general subject, and for numerous illustrations, reference is made to the following cases, which it is not necessary to examine in detail: *Bronson* v. *Kinzie*, 1 How. 311; *Von Hoffman* v. *City of Quincy*, 4 Wall. 535; *Bruce* v. *Schuyler et al.*, 9 Ill. 221, in each of which a large number of cases is collected.

If a particular form of proceeding is prohibited, and another is left or is provided which affords an effective and reasonable mode of enforcing the right, the obligation of the contract is not impaired. *Bronson* v. *Kinzie*, *supra*; *Huntzinger* v. *Brock*, 3 Grant's Cases (Pa.), 243; *Evans* v. *Montgomery*, 4 Watts & S. (Pa.) 218; *Read* v. *Frankfort Bank*, 23 Me. 318.

The rule seems to be that in modes of proceeding and of forms to enforce the contract the legislature has the control, and may enlarge, limit, or alter them, provided that it does not deny a remedy, or so embarrass it with conditions and restrictions as seriously to impair the value of the right. *Bronson* v. *Kinzie*, *supra*.

If we assume that prior to 1873 the relator had authority to prosecute his claim against the State by *mandamus*, and that by the statutes of that year the further use of that form was prohibited to him, the question remains, whether an effectual remedy was left to him or provided for him. We think the regulation of the statute gave him an abundant means of enforcing such right as he possessed. It provided that he might pay his claim to the collector under protest, giving notice thereof to the comptroller of the treasury; that at any time within thirty days thereafter he might sue the officer making the collection; that the case should be tried by any court having jurisdiction, and, if found in favor of the plaintiff on the merits, the court should certify that the same was wrongfully

paid and ought to be refunded, and the comptroller should thereupon issue his warrant therefor, which should be paid in preference to other claims on the treasury.

This remedy is simple and effective. A suit at law to recover money unlawfully exacted is as speedy, as easily tried, and less complicated than a proceeding by *mandamus*. Every attorney knows how to carry on the former, while many would be embarrassed by the forms of the latter. Provision is also made for prompt payment of the amount by the State, if judgment is rendered against the officer on the merits.

We are not cited to any statutes authorizing suits to be brought against a State directly, and we know of none. In a special and limited class of cases, the United States permits itself to be sued in the Court of Claims; but such is not the general rule. In revenue cases, whether arising upon its internal revenue laws or those providing for the collection of duties upon foreign imports, it adopts the rule prescribed by the State of Tennessee. It requires the contestant to pay the amount as fixed by the government, and gives him power to sue the collector, and in such suit to test the legality of the tax. There is nothing illegal or even harsh in this. It is a wise and reasonable precaution for the security of the government. No government could exist that permitted the collection of its revenues to be delayed by every litigious man or every embarrassed man, to whom delay was more important than the payment of costs.

We think there is no ground for the assertion that a speedy and effective remedy is not provided to enforce the claim set up by the plaintiff. This is the only question properly before us, and we are of the opinion that it presents no ground for reversing the judgment of the court below.

The other important questions discussed in the opinion of the court below and argued by the counsel it is not necessary here to examine; they do not arise at this time.

Judgment affirmed.

MEISTER v. MOORE.

1. A marriage valid at common law is valid, notwithstanding the statutes of the State where it is contracted prescribe directions respecting its formation and solemnization, unless they contain express words of nullity.
2. This court adopts, as an authoritative declaration of the law of Michigan, the ruling of the Supreme Court of that State in *Hutchins* v. *Kimmell*, 31 Mich. 126, that, notwithstanding the statutory regulations have not been complied with, a marriage contracted there *per verba de præsenti* is valid.

ERROR to the Circuit Court of the United States for the Western District of Pennsylvania.

This was ejectment, brought Oct. 9, 1873, by Bernard L. Meister, for the possession of certain lots of ground in Pittsburg, Pa.

Both parties claimed under William Mowry, the plaintiff, as the alienee of the alleged wife and daughter of said William, and the defendants, as the vendees of his mother, in whom the title of the property vested, if he died unmarried and without issue.

The plaintiff, to maintain the issue on his part, introduced evidence tending to prove that, some time in the year 1844 or 1845, said William went from Pittsburg to the Saginaw Valley, in the State of Michigan, and there became acquainted with Mary, the daughter of an Indian named Pero; that, in the latter part of the year 1845, Mowry and Mary were married, and thereafter lived and cohabited together as man and wife, and had one child born to them, named Elizabeth; that said Mowry died intestate, some time in 1852, at Pittsburg, leaving no issue living at his death save said Elizabeth, who afterwards married one Isaacs; and that they, Aug. 27, 1873, conveyed the demanded premises to the plaintiff.

The defence was —

1. That the plaintiff's evidence, even if true, did not, under the statute of Michigan, regulating the solemnization of marriage, establish a valid marriage between William Mowry and the Indian woman.

2. That that evidence utterly failed to establish a valid marriage at common law.

The Revised Statutes of Michigan upon the subject of the

solemnization of marriages, adopted in the year 1838, and in force at the time of the alleged marriage, enact as follows: —

"SECT. 6. Marriages may be solemnized by any justice of the peace in the county in which he is chosen; and they may be solemnized throughout the State by any minister of the gospel who has been ordained according to the usages of his denomination, and who resides within this State, and continues to preach the gospel."

"SECT. 8. In the solemnization of marriage no particular form shall be required, except that the parties shall solemnly declare, in the presence of the magistrate or minister and the attending witnesses, that they take each other as husband and wife. In every case there shall be at least two witnesses, besides the minister or magistrate, present at the ceremony."

"SECT. 14. No marriage solemnized before any person professing to be a justice of the peace or a minister of the gospel shall be deemed or adjudged to be void, nor shall the validity thereof be in any way affected on account of any want of jurisdiction or authority in such supposed justice or minister: *Provided*, that the marriage be consummated with a full belief on the part of the persons so married, or either of them, that they have been lawfully joined in marriage.

"SECT. 15. The preceding provisions, so far as they relate to the manner of solemnizing marriages, shall not affect marriages among the people called Friends, or Quakers, nor marriages among the people called Menonists; but such marriages may be solemnized in the manner heretofore used and practised in their respective societies." Rev. Stat. 1838, pp. 334, 335.

The court below charged the jury that the validity of the alleged marriage must be determined by the laws of Michigan; and that, if they found that neither a minister nor a magistrate was present thereat, — and such was the plaintiff's proof, — it was invalid under the statute of that State, and their verdict should be for the defendants.

There was a verdict for the defendants. Judgment was rendered accordingly, whereupon the plaintiff brought the case here.

Mr. H. W. Weir for the plaintiff in error.

A statute regulating the forms of marriage is merely directory, and, unless it contains an express clause of nullity, a marriage *per verba de præsenti* is valid. 1 Bishop, Mar. & Div., sects. 277 *a*, 279, 280, 283 *et seq.*; *The State* v. *Worthington*, Chi-

cago Legal News, June 16, 1877; *Commonwealth* v. *Jackson*, 11 Bush (Ky.), 679; 2 Greenl. Evid., sects. 461, 462. Such is the ruling of the Supreme Court of Michigan. *Hutchins* v. *Kimmell*, 31 Mich. 126; *Proctor* v. *Bigelow*, Jan. Term, 1878, not yet reported.

Mr. M. W. Acheson, contra.

The judgment below is not erroneous. *People* v. *Slack*, 15 Mich. 198; *Holmes* v. *Holmes*, 1 Abb. (U. S.) 525; *Milford* v. *Worcester*, 7 Mass. 48; *Ligonia* v. *Buxton*, 2 Me. 95; *Roche* v. *Washington*, 19 Ind. 53; *The State* v. *Samuel*, 2 Dev. & B. (N. C.) Eq. 177; *State* v. *Patterson*, 2 Ired. (N. C.) L. 346; *Bashaw* v. *State of Tennessee*, 1 Yerg. (Tenn.) 177; *Grisham* v. *State of Tennessee*, 2 id. 589; *Robertson* v. *The State*, 42 Ala. 509.

Affirmative statutes which introduce a new rule or prescribe a specific mode of doing a thing imply a negative of all that is not within their purview. *Slade* v. *Drake*, Hob. 298; *Stradling* v. *Morgan*, Plowd. 206.

A contract in contravention of statutory provisions which contain nothing from which its validity can be inferred, is void. *Mitchell* v. *Smith*, 1 Binn. (Pa.) 118; *Bank* v. *Haldeman*, 7 Watts & S. (Pa.) 233.

MR. JUSTICE STRONG delivered the opinion of the court.

The learned judge of the Circuit Court instructed the jury, that, if neither a minister nor a magistrate was present at the alleged marriage of William A. Mowry and the daughter of the Indian Pero, the marriage was invalid under the Michigan statute; and this instruction is now alleged to have been erroneous. It certainly withdrew from the consideration of the jury all evidence, if any there was, of informal marriage by contract *per verba de præsenti*. That such a contract constitutes a marriage at common law there can be no doubt, in view of the adjudications made in this country, from its earliest settlement to the present day. Marriage is everywhere regarded as a civil contract. Statutes in many of the States, it is true, regulate the mode of entering into the contract, but they do not confer the right. Hence they are not within the principle, that, where a statute creates a right and provides a remedy for

its enforcement, the remedy is exclusive. No doubt, a statute may take away a common-law right; but there is always a presumption that the legislature has no such intention, unless it be plainly expressed. A statute may declare that no marriages shall be valid unless they are solemnized in a prescribed manner; but such an enactment is a very different thing from a law requiring all marriages to be entered into in the presence of a magistrate or a clergyman, or that it be preceded by a license, or publication of banns, or be attested by witnesses. Such formal provisions may be construed as merely directory, instead of being treated as destructive of a common-law right to form the marriage relation by words of present assent. And such, we think, has been the rule generally adopted in construing statutes regulating marriage. Whatever directions they may give respecting its formation or solemnization, courts have usually held a marriage good at common law to be good notwithstanding the statutes, unless they contain express words of nullity. This is the conclusion reached by Mr. Bishop, after an examination of the authorities. Bishop, Mar. and Div., sect. 283 and notes. We do not propose to examine in detail the numerous decisions that have been made by the State courts. In many of the States, enactments exist very similar to the Michigan statute; but their object has manifestly been, not to declare what shall be requisite to the validity of a marriage, but to provide a legitimate mode of solemnizing it. They speak of the celebration of its rite rather than of its validity, and they address themselves principally to the functionaries they authorize to perform the ceremony. In most cases, the leading purpose is to secure a registration of marriages, and evidence by which marriages may be proved; for example, by certificate of a clergyman or magistrate, or by an exemplification of the registry. In a small number of the States, it must be admitted, such statutes have been construed as denying validity to marriages not formed according to the statutory directions. Notably has this been so in North Carolina and in Tennessee, where the statute of North Carolina was in force. But the statute contained a provision declaring null and void all marriages solemnized as directed, without a license first had. So, in Massachusetts, it was early decided that a

statute very like the Michigan statute rendered illegal a marriage which would have been good at common law, but which was not entered into in the manner directed by the written law. *Milford* v. *Worcester*, 7 Mass. 48. It may well be doubted, however, whether such is now the law in that State. In *Parton* v. *Henry* (1 Gray (Mass.), 119), where the question was, whether a marriage of a girl only thirteen years old, married without parental consent, was a valid marriage (the statute prohibiting clergymen and magistrates from solemnizing marriages of females under eighteen, without the consent of parents or guardians), the court held it good and binding, notwithstanding the statute. In speaking of the effect of statutes regulating marriage, including the Massachusetts statute (which, as we have said, contained all the provisions of the Michigan one), the court said: "The effect of these and similar statutes is not to render such marriages, when duly solemnized, void, although the statute provisions have not been complied with. They are intended as directory only upon ministers and magistrates, and to prevent as far as possible, by penalties on them, the solemnization of marriages when the prescribed conditions and formalities have not been fulfilled. But, in the absence of any provision declaring marriages not celebrated in a prescribed manner, or between parties of certain ages, absolutely void, it is held that all marriages regularly made according to the common law are valid and binding, though had in violation of the specific regulations imposed by statute." There are two or three other States in which decisions have been made like that in 7th Massachusetts.

We will not undertake to cite those which hold a different doctrine, one in accord with the opinion we have cited from 1 Gray. Reference is made to them in Bishop, Mar. and Div. sect. 283 *et seq.*; in Reeve's Domestic Relations, 199, 200; in 2 Kent, Com. 90, 91; and in 2 Greenleaf on Evidence. The rule deduced by all these writers from the decided cases is thus stated by Mr. Greenleaf: —

"Though in most, if not all, the United States there are statutes regulating the celebration of marriage rites, and inflicting penalties on all who disobey the regulations, yet it is generally considered, that, in the absence of any positive statute declaring that all mar

riages not celebrated in the prescribed manner shall be void, or that none but certain magistrates or ministers shall solemnize a marriage, any marriage, regularly made according to the common law, without observing the statute regulations, would still be a valid marriage."

As before remarked, the statutes are held merely directory; because marriage is a thing of common right, because it is the policy of the State to encourage it, and because, as has sometimes been said, any other construction would compel holding illegitimate the offspring of many parents conscious of no violation of law.

The Michigan statute differs in no essential particular from those of other States which have generally been so construed. It does not declare marriages void which have not been entered into in the presence of a minister or a magistrate. It does not deny validity to marriages which are good at common law. The most that can be said of it is, that it contains implications of an intention that all marriages, except some particularly mentioned, should be celebrated in the manner prescribed. The sixth section declares how they may be solemnized. The seventh describes what shall be required of justices of the peace and ministers of the gospel before they solemnize any marriage. The eighth declares that in every case, that is, whenever any marriage shall be solemnized in the manner described in the act, there shall be at least two witnesses present beside the minister or magistrate. The ninth, tenth, eleventh, sixteenth, and seventeenth sections provide for certificates, registers, and exemplifications of records of marriages solemnized by magistrates and ministers. The twelfth and thirteenth impose penalties upon justices and ministers joining persons in marriage contrary to the provisions of the act, and upon persons joining others in marriage, knowing that they are not lawfully authorized so to do. The fourteenth and fifteenth sections are those upon which most reliance is placed in support of the charge of the Circuit Court. The former declares that no marriage solemnized before any person professing to be a justice of the peace or minister of the gospel shall be deemed or adjudged to be void on account of any want of jurisdiction or authority in such supposed minister or justice, provided the marriage be

consummated with a full belief on the part of the persons so married, or either of them, that they have been lawfully joined in marriage. This, it is argued, raises an implication that marriages not in the presence of a minister or justice, or one professing to be such, were intended to be declared void. But the implication is not necessarily so broad. It is satisfied if it reach not beyond marriages in the mode allowed by the act of the legislature.

The fifteenth section exempts people called Quakers, or Friends, from the operation of the act, as also Menonists. As to them the act gives no directions. From this, also, an inference is attempted to be drawn that lawful marriages of all other persons must be in the mode directed or allowed. We think the inference is not a necessary one. Both these sections, the fourteenth and the fifteenth, are to be found in the acts of other States, in which it has been decided that the statutes do not make invalid common-law marriages.

It is unnecessary, however, to pursue this line of thought. If there has been a construction given to the statute by the Supreme Court of Michigan, that construction must, in this case, be controlling with us. And we think the meaning and effect of the statute has been declared by that court in the case of *Hutchins* v. *Kimmell* (31 Mich. 126), a case decided on the 13th of January, 1875. There, it is true, the direct question was, whether a marriage had been effected in a foreign country. But, in considering it, the court found it necessary to declare what the law of the State was; and it was thus stated by Cooley, J.: "Had the supposed marriage taken place in this State, evidence that a ceremony was performed ostensibly in celebration of it, with the apparent consent and co-operation of the parties, would have been evidence of a marriage, even though it had fallen short of showing that the statutory regulations had been complied with, or had affirmatively shown that they were not. Whatever the form of ceremony, or even if all ceremony was dispensed with, if the parties agreed presently to take each other for husband and wife, and from that time lived together professedly in that relation, proof of these facts would be sufficient to constitute proof of a marriage binding upon the parties, and which would subject them and others to

legal penalties for a disregard of its obligations. This has become the settled doctrine of the American courts; the few cases of dissent, or apparent dissent, being borne down by the great weight of authority in favor of the rule as we have stated it;" citing a large number of authorities, and concluding, "such being the law of this State." We cannot regard this as mere *obiter dicta*. It is rather an authoritative declaration of what is the law of the State, notwithstanding the statute regulating marriages. And if the law in 1875, it must have been the law in 1845, when, it is claimed, Mowry and the Indian girl were married; for it is not claimed that any change of the law was made between the time when the statute was enacted and 1875. The decision of the Michigan Supreme Court had not been made when this case was tried in the court below. Had it been, it would doubtless have been followed by the learned and careful circuit judge. But, accepting it as the law of Michigan, we are constrained to rule there was error in charging the jury, that, if they found neither a minister nor a magistrate was present at the alleged marriage, such marriage was invalid, and the verdict should be for the defendants.

It has been argued, however, that there was no evidence of any marriage good at common law, which could be submitted to the jury, and, therefore, that the error of the court could have done the plaintiff no harm. If all the evidence given or legally offered were before us, we might be of that opinion; but the record does not contain it all, and we are unable, therefore, to say the ruling of the court was immaterial. The case must, therefore, go back for a new trial. We do not consider the other questions presented. They may not arise on the second trial.

Judgment reversed, and new trial ordered.

NOTE. — In *Meister* v. *Bissell*, which embraced the same facts as did the preceding case, and which was argued at the same time and by the same counsel as was that case, MR. JUSTICE STRONG, in delivering the opinion of the court, remarked, that the opinion given in that case controlled this.

Judgment reversed, and new trial ordered.

INSURANCE COMPANY v. MCCAIN.

1. An insurance company cannot hold out a person as its agent, and then disavow responsibility for his acts. Persons dealing with him in the particular business for which he was appointed have a right to rely upon the continuance of his authority, until in some way informed of its revocation.
2. Unless instructions limiting the authority of a general agent of an insurance company, whose powers would otherwise be coextensive with the business intrusted to him, are communicated to the party with whom he deals, the company is bound to the same extent as though such special instructions had not been given.
3. The receipt, without objection, by an insurance company of a statement from a person who had been acting as its agent, that the premium for the renewal of a policy had been paid to him, and its failure then to notify the assured that the powers of the agent had terminated, is equivalent to an adoption of the act of the agent, and estops the company, when sued on the policy, from denying his authority.

ERROR to the Circuit Court of the United States for the Southern District of Alabama.

This was an action on a policy of insurance issued by the Southern Life Insurance Company, a corporation created by the laws of Tennessee, upon the life of Adam S. McCain, commencing on the tenth day of December, 1868. The insurance was for the sum of $5,000, and was effected by the wife of the insured, for the sole use of herself and children. The policy was received from an agent of the company, one B. F. Smith, who was appointed to solicit applications for policies and collect premiums for a district of country embracing a part of Mississippi and also a part of Alabama, in which the insured resided. To him the first premium was paid. The second premium, due on the 10th of December, 1869, was paid on the 5th, of that month, to his sub-agent, who, before the 10th, handed him the amount, and it was credited in his account rendered to the company in April following. The account disclosed the fact that the amount was received upon the policy in question. After its receipt, no communication was made by the company to the assured that Smith was not its agent at the time of the payment, nor was any objection made to the sufficiency of the payment. The insured died in June, 1870, and this action was commenced in January, 1873, in a State court, and, on application of the defendant, was transferred to the Circuit Court of

the United States. The proper preliminary proof of the death of the insured was made, and the case turned upon the sufficiency of the second payment.

The company, in its defence, denied the authority of Smith to receive the premium, contending that his agency had previously ceased, under the rules and regulations of the company, by his accepting the agency of another insurance company; and, further, that its agents were only empowered to collect renewal premiums upon special receipts, sent out from the office of the company for each case, signed by its president and secretary, and countersigned by the agent. The evidence established the existence of such regulations, and tended to show that the agent had resigned his agency previous to the 1st of December. It appeared also that no renewal receipt, signed as required, was given in the case. But the court held, and in substance instructed the jury, that if Smith was the general agent of the company, and as such had authority to bind the company by a receipt of the renewal premium before the tenth day of December, 1869, a payment to him was sufficient, unless previously to such payment the assured had notice that the agent's authority had been revoked; and that though, as a general rule, a person dealing with an agent must inquire into his authority, yet that the powers of an agent were *prima facie* coextensive with the business intrusted to his care, and would not be narrowed by limitations from his principal not communicated to the person with whom he dealt; and that, unless the assured was informed that a payment would not be good in the absence of a particular form of receipt, a payment by him within the time prescribed by the policy was sufficient, though a different form of receipt was used.

The court also held, and instructed the jury, in substance, that if the company received, in April, 1870, a statement of the agent Smith, showing a receipt by him of the renewal premium payable on the 10th of December, and the company did not notify the assured, who lived more than a month afterwards, that it repudiated the transaction, it would be a fraud on its part to repudiate the payment after his death, and that the payment would bind the company. The jury found a verdict for the plaintiff, upon which judgment was entered;

and the insurance company brought the case here on writ of error.

Mr. John D. McPherson for the plaintiff in error.

Mr. P. Phillips, contra.

MR. JUSTICE FIELD, after stating the facts of the case, delivered the opinion of the court.

The law embraced by the instructions to the jury is clearly and correctly stated. No company can be allowed to hold out another as its agent, and then disavow responsibility for his acts. After it has appointed an agent in a particular business, parties dealing with him in that business have a right to rely upon the continuance of his authority, until in some way informed of its revocation. The authorities to this effect are numerous, and will be found cited in the treatises of Paley and Story on Agency.

The law is equally plain, that special instructions limiting the authority of a general agent, whose powers would otherwise be coextensive with the business intrusted to him, must be communicated to the party with whom he deals, or the principal will be bound to the same extent as though such special instructions were not given. Were the law otherwise, the door would be open to the commission of gross frauds. Good faith requires that the principal should be held by the acts of one whom he has publicly clothed with apparent authority to bind him. Story, Agency, sects. 126, 127, and cases there cited.

The law on the silence of the company, after receiving the statement of the agent that the premium had been paid, is also free from doubt. Silence then was equivalent to an adoption of the act of the agent, and closed the mouth of the company ever afterwards. It does not appear that the company ever objected to the payment of the premium to him until after the death of the insured. It was then too late. As pertinently said by counsel, the company cannot be permitted to occupy the vantage ground of retaining the premium if the party continued in life, and repudiating it if he died.

Judgment affirmed.

McALLISTER v. KUHN.

1. Upon a writ of error to reverse a judgment by default, such defects in the declaration or complaint as could have been taken advantage of before judgment by general demurrer may be brought under review.
2. If the judgment would have been arrested on motion, because the declaration did not state facts sufficient to constitute a cause of action, it may, for the same reason, be reversed upon error.
3. A declaration in an action for the wrongful conversion of the shares of the capital stock of a corporation is sufficient for the purposes of pleading, if it states the ultimate fact to be proven. The circumstances which tend to prove that fact can be used for the purposes of evidence; but they have no place in the pleadings.
4. By the Code of Practice of Utah, the failure of a defendant to appear at the time of the assessment of damages against him by the court is a waiver by him of an assessment by a jury.
5. This court has no power to re-examine the action of a territorial court in refusing to set aside a judgment by default.

ERROR to the Supreme Court of the Territory of Utah.

This action was brought, Sept. 9, 1873, in the District Court of the third judicial district of the Territory of Utah, by Bertrand Kuhn, against John D. T. McAllister, for the wrongful conversion of certain shares of stock.

Kuhn alleged in his complaint that, on the first day of September, 1873, he was the owner of two hundred and fifty shares, unassessable, of the paid-up capital stock of the North Star Silver Mining Company, a corporation existing under the laws of the Dominion of Canada, which were represented by five certificates, for fifty shares, each signed by the secretary, treasurer, and president of said company, and that said shares were then of the value of $12,000.

That on or about that day, while he was such owner and lawfully entitled to their possession, the defendant, at Salt Lake City, without his consent and wrongfully, took said shares, and converted them unlawfully and wrongfully to his own use.

That before the commencement of this action he demanded of the defendant possession of the said stock, but that the defendant refused to return the same, and still retains possession thereof.

Summons was served upon the defendant in person Sept. 10, 1873, and on the 18th he appeared and filed a demurrer.

April 15, 1874, the application of the defendant for leave to withdraw his demurrer and for ten days within which to answer was granted; but, on the 28th, no answer having been filed, his default was entered.

Oct. 13, the plaintiff having introduced his proofs, the court assessed his damages, and entered judgment in his favor for $3,300, with interest and costs.

The defendant having moved to vacate the judgment, the court overruled the motion; whereupon he appealed to the Supreme Court of the Territory, where, June 30, 1875, the judgment below was affirmed.

McAllister then sued out this writ, and here assigns for error: —

1. Shares of stock being intangible, and only representing the right of the owner to receive dividends of profit, and, at the dissolution of the company, portions of the surplus, if any there be, cannot, against the will of the owner, be wrongfully taken and converted to the use of another. Therefore, the averment that McAllister wrongfully took and converted the shares of the plaintiff to his use, is an averment of an impossibility, and tenders no issuable fact.

2. The averment that said shares were contained in and represented by five certificates signed as alleged, is only a conclusion of law.

3. The corporation is governed by the laws of the Dominion of Canada; and there is no averment showing in what manner its shares could be transferred to McAllister, or he could obtain a right to them against the consent of Kuhn.

4. The court erred in assessing the damage without submitting that question to a jury.

5. The court erred in refusing, on McAllister's motion, to open the judgment, set aside the default, and grant him leave to defend the action.

6. The Supreme Court of the Territory erred in affirming the judgment of the District Court.

Mr. Z. Snow for the plaintiff in error.

Mr. James H. Mandeville, contra.

MR. CHIEF JUSTICE WAITE delivered the opinion of the court.

Upon a writ of error to reverse a judgment by default, such defects in the declaration or complaint as could have been taken advantage of before judgment by general demurrer may be brought under review. If the judgment would have been arrested on motion, if made, because the declaration did not state facts sufficient to constitute a cause of action, it may be reversed for the same reason upon error.

In this case, the complainant alleges a wrongful conversion by McAllister to his own use of certain shares of the capital stock of a foreign corporation owned by Kuhn, which were represented by certificates of stock that had come into the possession of McAllister. There can be no doubt that shares of stock in a corporation may be transferred by means of an assignment and delivery of certificates. It is true that a certificate of stock is not the stock itself; but it is documentary evidence of title to stock, and may be used for the purposes of symbolical delivery, as the stock itself is incapable of actual delivery. A blank indorsement of a certificate may be filled up by writing an assignment and power of attorney over the signature indorsed, and in this way an actual transfer of the stock on the books of the corporation may be perfected. A wrongful use of such an indorsed certificate for such a purpose may operate as a conversion of the stock.

If the statements contained in the petition are true, and McAllister had actually converted the stock to his own use, Kuhn was entitled to his damages. By his default, whatever had been properly pleaded was confessed. Had issue been joined upon the averment of conversion, it would have been necessary to show the existence of facts which in law constituted a conversion; but, for the purposes of pleading, the ultimate fact to be proven need only be stated. The circumstances which tend to prove the ultimate fact can be used for the purposes of evidence, but they have no place in the pleadings. We think the complaint does state all the facts necessary to constitute a cause of action.

By the Code of Practice in Utah, the failure of McAllister to appear at the time of the assessment of damages was a waiver by him of an assessment by a jury.

This court has no power to re-examine the action of the territorial courts in refusing to set aside the judgment by default.

We find no error in the record.

Judgment affirmed.

KING v. PARDEE.

1. In Pennsylvania, a resulting trust in land, if not sought to be enforced for a period of twenty-one years, and not reaffirmed and continued, will, under ordinary circumstances, be extinguished.
2. That rule is especially applicable where the party having the legal title has, during the required period of twenty-one years, been in notorious and adverse possession, paying the taxes, exercising all the usual rights of ownership, and his title has for the whole period been on record in the proper office.

ERROR to the Circuit Court of the United States for the Western District of Pennsylvania.

The facts are fully stated in the opinion of the court.

Mr. George W. Biddle for the defendant in error.

No counsel appeared for the plaintiffs in error.

MR. JUSTICE BRADLEY delivered the opinion of the court.

This is an action of ejectment brought in the court below in June, 1871, by James Turnbull, Jr., a subject of Mexico, against Ario Pardee, a citizen of Pennsylvania, to recover one undivided eighth part of a tract of land in Hazel Township, Luzerne County, Pennsylvania, containing four hundred and thirty-nine and one-half acres, known as the Mary Kunkle tract. Turnbull having died *pendente lite*, King and other heirs-at-law were substituted in his stead. Edward Roberts and the executors of Algernon S. Roberts, deceased, were admitted to defend with Pardee as his landlord of the premises in question. Plea, general issue.

On the trial, evidence was given tending to show that Alexander Turnbull died seised of the premises in question on the tenth day of July, 1826, leaving a widow and four children his heirs-at-law; namely, James, Alexander, Jane, and Margaret, all of full age. The widow died in 1832. Alexander Turnbull,

Jr., one of the heirs, died in Philadelphia, in 1835, leaving the plaintiff, his son and sole heir-at-law, then in the thirteenth year of his age. It thus appeared that the plaintiff, as heir-at-law of his father, was entitled to any interest in the lands in question of which his father may have died seised. He left Philadelphia for Mexico in 1850, in the twenty-eighth year of his age.

The defendants gave in evidence a judgment on bond and warrant, rendered in the Court of Common Pleas of Luzerne County on the twenty-second day of February, 1827, against James Turnbull and Alexander Turnbull, Jr. (two of the heirs of Alexander Turnbull), at the suit of William Drysdale, administrator of Alexander Turnbull, Sen., for the sum of $4,980: also, a *fi. fa.* and *venditioni exponas* issued on said judgment; a levy under said writs upon the premises in question; a return by the sheriff of a sale thereof for the sum of $25 on the fourth day of August, 1827; and a deed in pursuance of such sale, to John N. Conyngham, the attorney of the plaintiff in the judgment, bearing date the 14th of April, 1828: also, a deed from Conyngham to Drysdale, the administrator, and plaintiff in the judgment, for a like consideration, dated the 10th of July, 1828. Both of these deeds were recorded on the thirteenth day of January, 1832. The sheriff's deed purported to convey all the right, title, and interest of James Turnbull and Alexander Turnbull, Jr., in and to the premises in question; and the deed from Conyngham conveyed all his title and interest to Drysdale. The interest thus levied on and sold was, of course, one undivided half of the premises in dispute. The claim of the plaintiff is, that this purchase at sheriff's sale by the attorney of the administrator inured, in equity, to the benefit of the heirs or distributees of his grandfather, by way of a resulting trust, which would give him a right to one undivided eighth part of the property.

Jane Turnbull, one of the heirs-at-law of Alexander Turnbull, Sen., was the wife of William Drysdale, the administrator aforesaid. Therefore, at this period, July, 1828, the legal title acquired by William Drysdale in the shares of James and Alexander, together with that of his wife and her sister Margaret, who was unmarried, made up the entire legal title to the premises in dispute.

The defendant then gave in evidence a warranty deed in fee-simple for the whole premises from William Drysdale and his wife and Margaret Turnbull to the defendant Edward Roberts, and Algernon S. Roberts, now deceased, for the consideration of $46,500, which deed was recorded Nov. 23, 1846; and also extracts from the assessment-books of Hazel Township, Luzerne County, showing the assessment of the property to the Robertses from 1847 down to the commencement of the suit. Evidence was also given tending to show continued notorious and adverse possession of the property by the defendants from 1846 to the commencement of the suit, by opening and working coal-mines thereon, building coal-breakers, railroads, houses, and other structures, and cutting wood over the whole tract.

The question raised in this case was, whether the resulting trust which it is contended arose in favor of the heirs or distributees of Alexander Turnbull, Sen., upon the purchase made by Drysdale, his administrator, through his attorney, Conyngham, under the judgment and execution against James and Alexander Turnbull, was still valid and in force at the commencement of this action, or whether it was barred by efflux of time.

The associate justice who tried the cause charged the jury as follows: —

"1. That though William Drysdale acquired the legal title to the land in controversy by the deed of John N. Conyngham to him, dated July 16, 1828, and recorded Jan. 13, 1832, yet he held in trust for the estate of which he was administrator, or rather for the heirs of the estate (there being no creditors), and held one undivided eighth part thereof for Alexander Turnbull, Jr., or his assigns; that this was not an express trust; that it was not declared in the deed of Conyngham, or to Drysdale, but that it was a trust which the law implied, growing out of the relation of the parties. Drysdale, then, was the legal owner, while at the same time there was an equitable right in the heirs of the elder Turnbull to require him to convey the property to them, or, if he had sold it at an advance, to require him to account for the proceeds of his sale."

"The right of Alexander Turnbull, Jr., and that of the plaintiff, who claims as his heir, is merely an equitable one. I will

not, however, now instruct you that the plaintiff cannot recover in this ejectment solely for that reason, but I call your attention to the question, whether the equity which arose when the sheriff's sale was made to Conyngham, and subject to which Drysdale took the land, survived until this suit was brought. Such rights do not live for ever. If they are not asserted within a reasonable time, they die, and generally what is a reasonable time is determined in analogy to the Statute of Limitations. If it be an implied equitable right to land, ordinarily it cannot be enforced after twenty-one years."

"It is true, if a party in whom such a right is vested has no knowledge of its existence, or means of knowledge, the law admits of longer delay in asserting the right." Reference was then made to the evidence which the jury was directed to consider, with the instruction, that if they found "the plaintiff's father, Alexander Turnbull, Jr., or the plaintiff, had knowledge in 1828, when the trust arose, or in 1832, when the deed to Drysdale was recorded, or at any time more than twenty-one years before 1871, when this suit was brought, or that they, or either of them, had means of knowledge that Drysdale, the administrator, had taken the title to himself, and therefore held it in trust, the claim was too stale, that any equity in the plaintiff's favor that may once have existed cannot now be enforced, and that the plaintiff cannot recover."

2. The jury was further instructed, "that, by the Act of Assembly of April 22, 1856, entitled, 'An Act for the greater certainty of title and more secure enjoyment of real estate,' it was enacted that no right of entry shall accrue or action be maintained to enforce any implied or resulting trust as to realty but within five years after such equity or trust accrued, with the right of entry, unless such trust shall have been acknowledged by writing to subsist by the party to be charged therewith within the said period; with a proviso, that, as to any one affected with a trust by reason of his fraud, the limitation shall begin to run only from the discovery thereof, or when by reasonable diligence the party defrauded might have discovered the same; and with a further proviso, that any person who would sooner be barred by the act should not be thereby barred for two years after its passage."

This act, the jury were instructed, embraced such a trust as the plaintiff is seeking to enforce in this action; and they were charged, that if they found Drysdale was guilty of no fraud in taking the deed to himself, as he did, or even if he became a trustee by reason of his fraud, if they found that his fraud was discovered by the party defrauded, or might have been discovered by reasonable diligence more than five years before 1871, the action could not be maintained, and the verdict should be for the defendants.

3. The jury were also instructed as follows: —

"The defendants also insist that they are protected by the general Statute of Limitations."

"The evidence tends to show, that when Messrs. Roberts bought the land, in 1846, they put Pardee and Fell immediately in possession, as their tenants, and that these tenants have continued in possession ever since. You have heard the evidence; what it proves is for you. It is not contradicted that these tenants sunk coal-shafts and slopes on the land, built railroads, coal-breakers, numerous houses, a saw-mill, and cut timber over the whole tract. Was this an adverse, exclusive, notorious, hostile, and continued possession for twenty-one years before the suit was brought? If it was, the plaintiff cannot recover: he is barred by the Statute of Limitations."

"It is true, no length of possession will protect a party against the entry or action of one in subordination to whom the possession has been held; and if the entry was in subordination to the title or right of another, the possession is presumed to be continued subordinate until notice of adverse claim is brought home to the holder of the paramount title. But I see no evidence that the defendants entered in subordination to any right of the plaintiff. When we speak of a subordinate title, we mean that the inferior title is in privity with another, as in case of a tenancy for years, life, at will, &c. There was no such entry in this case. The Messrs. Roberts put upon record, at the beginning, a deed declaring the entire interest to be in themselves; and there is no evidence that either they or their tenants, Pardee and Fell, ever acknowledged a superior right, or any right, in the plaintiff."

"It is also true, that the possession of one tenant in common

is generally regarded as the possession of his co-tenant until an ouster has taken place; and an ouster must be proved or presumed from facts in proof. It is argued on behalf of the plaintiff, that he was a tenant in common with the Messrs. Roberts in 1846, when they entered by their tenants. Certainly he was not of the legal estate; but if he was then a tenant in common with them, what is the legitimate effect of the evidence? It has been decided by the Supreme Court of this State, that, when one tenant in common enters on the whole and takes the profits, and claims the whole exclusively for twenty-one years, the jury ought to presume an ouster, though none be proved. 10 S. & R. 182; 9 Pa. St. 226; 13 S. & R. 356; 3 W. 77."

"The jury are, therefore, instructed that if they find from the evidence that the defendants entered upon the property in 1846, by themselves or their tenants, claiming it as their own exclusively, receiving its profits, and that they have maintained notorious, adverse, exclusive, hostile, and uninterrupted possession of the entire tract ever since, the verdict should be for the defendants."

4. The court also charged the jury that the plaintiff, claiming as he does as heir of his father, stands in no better situation than his father would stand in were he living and had this action been brought by him.

To each proposition of this charge in favor of the defendants the plaintiff excepted; and the question here is, whether it contained any error prejudicial to him. After giving due attention to the laws and judicial decisions of Pennsylvania, we are satisfied that the charge was as favorable to the plaintiff as could be asked. Each of its positions seems to be abundantly sustained by authority. A leading case on the first point is *Strimpfler* v. *Roberts* (18 Pa. St. 283), which adopts the general rule, that a resulting trust, resting in parol, is to be regarded as extinguished after the lapse of twenty-one years. This case has frequently been affirmed by subsequent cases cited in the defendants' brief. In *Fox* v. *Lyon* (33 id. 474), it is said: "In *Strimpfler* v. *Roberts*, it was decided, on great consideration, and reaffirmed in *Brock* v. *Savage* (31 id. 401), that where a warrant is issued to one person, and the purchase-money is paid by another, and the patent is afterwards taken out by the nominal

warrantee, the right of him who paid the purchase-money is gone, unless he takes possession of the land, or brings ejectment to recover it, within twenty-one years from the date of the warrant; and after that lapse of time he cannot recover, no matter how clearly he may be able to prove that the legal owner was, in the beginning, a trustee for him." And this decision was followed in the said case of *Fox* v. *Lyon*. It was also followed and reaffirmed in the subsequent cases of *Halsey* v. *Tate* (52 id. 311), and in *Lingenfelter* v. *Richey* (62 id. 123). In the latter case, it was claimed that a deed absolute on its face was nevertheless in trust. The court, following and relying on the cases of *Strimpfler* v. *Roberts*, and other cases to the same effect, with reference to the parties claiming the benefit of the said trust, said: "As they claimed title to the land against the express language of the deed, they were bound to show, by clear and satisfactory evidence, that there was a resulting trust in favor of Sparks, and that he had taken such possession of the land, or exercised such exclusive acts of ownership over it, within twenty-one years from the time the trust arose, as would prevent its extinguishment."

It is, therefore, an undoubted rule of law in Pennsylvania, that a resulting trust in land, if not sought to be enforced for a period of twenty-one years, and is not reaffirmed or continued, will, under ordinary circumstances, be extinguished. This rule is especially applicable where the party having the legal title has, during the required period of twenty-one years, been in notorious and adverse possession, paying the taxes and exercising all the usual rights of ownership, and his title has, for the whole period, been on record in the proper office. On this point, therefore, we think the charge was correct and unexceptionable.

We are also of opinion that the statute of 1856 and the general Statute of Limitations were applicable to the case upon the facts as submitted to the jury. As these points are fully explained in the charge itself, we deem it unnecessary to discuss them.

The fourth point needs no remark.

Judgment affirmed.

DAVIDSON v. NEW ORLEANS.

An assessment of certain real estate in New Orleans for draining the swamps of that city was resisted in the State courts, and by writ of error brought here, on the ground that the proceeding deprives the owner of his property without due process of law.

1. The origin and history of this provision of the Constitution, as found in Magna Charta, and in the fifth and fourteenth amendments to the Constitution of the United States, considered.
2. The court suggests the difficulty and danger of attempting an authoritative definition of what it is for a State to deprive a person of life, liberty, or property without due process of law, within the meaning of the fourteenth amendment; and holds that the annunciation of the principles which govern each case as it arises is the better mode of arriving at a sound definition.
3. This court has heretofore decided that due process of law does not in all cases require a resort to a court of justice to assert the rights of the public against the individual, or to impose burdens upon his property for the public use. *Murray's Lessee et al.* v. *Hoboken Land and Improvement Company*, 18 How. 272, and *McMillan* v. *Anderson*, 95 U. S. 37.
4. In the present case, the court holds that it is due process of law, within the meaning of the Constitution, when the statute requires that such a burden, or the fixing of a tax or assessment before it becomes effectual, must be submitted to a court of justice, with notice to the owners of the property, all of whom have the right to appear and contest the assessment.
5. Neither the corporate agency by which the work is done, the excessive price which the statute allows therefor, nor the relative importance of the work to the value of the land assessed, nor the fact that the assessment is made before the work is done, nor that the assessment is unequal as regards the benefits conferred, nor that personal judgments are rendered for the amount assessed, are matters in which the State authorities are controlled by the Federal Constitution.

ERROR to the Supreme Court of the State of Louisiana.

On the 7th of December, 1871, the petition of the city of New Orleans and the administrators thereof was filed in the Seventh District Court for the Parish of Orleans, setting forth an assessment on certain real estate, made under the statutes of Louisiana, for draining the swamp lands within the parishes of Carroll and Orleans; and asking that the assessment should be homologated by the judgment of the court. The estate of John Davidson was assessed for various parcels in different places for about $50,000. His widow and testamentary executrix appeared in that court and filed exceptions to the assessment; and the court refused the order of homologation,

and set aside the entire assessment, with leave to the plaintiffs to present a new tableau.

On appeal from this decree, the Supreme Court of Louisiana reversed it, and ordered the dismissal of the oppositions, and decreed that the assessment-roll presented be approved and homologated, and that the approval and homologation so ordered should operate as a judgment against the property described in the assessment-roll, and also against the owner or owners thereof. Mrs. Davidson then sued out the writ of error by which this judgment is now brought here for review.

Mr. James D. Hill and *Mr. John D. McPherson* for the plaintiff in error.

The legislation of Louisiana, under which the judgment below was rendered, deprives the plaintiff in error of her property without due process of law. The jurisdiction of this court is, therefore. established. *Bank of Columbia* v. *Okely*, 4 Wheat. 244; *Loan Association* v. *Topeka*, 20 Wall. 655; *United States* v. *Cruikshank*, 92 U. S. 542; *Munn* v. *Illinois*, 94 id. 113; *People* v. *Hurlbut*, 24 Mich. 44; Cooley, Taxation, 486, 487.

The legislature cannot impose upon the owner of lands a personal obligation to pay an assessment which is a charge upon them. *Taylor* v. *Palmer*, 31 Cal. 240; *Neenan* v. *Smith*, 50 Mo. 525, followed in 56 id. 286, 350.

The legislature, by employing a private corporation to do the drainage of the city of New Orleans, on account of which the assessment was made, fixing the price and requiring that warrants therefor shall be issued and indorsed, compelled the city to make a contract. This was beyond the legislative power. *Atkins* v. *Randolph*, 31 Vt. 226; *Hampshire* v. *Franklin*, 16 Mass. 76; *Taylor* v. *Porter*, 4 Hill (N. Y.), 143; *Brummer* v. *Litchfield*, 2 Greenl. (Me.) 28; *People* v. *Detroit*, 28 Mich. 228; *Sharpley* v. *Philadelphia*, 21 Pa. 165; *Washington Avenue Case*, 69 id. 362; *Sleight* v. *People*, 7 Chic. Leg. News, 292; *The People* v. *The Mayor*, 57 Ill. 18; *People* v. *Salomon*, id. 38; *People* v. *Chicago*, id. 582; *Madison County* v. *People*, 58 id. 463; *Hessler* v. *The Drainage Commissioners*, 53 id. 105; *Livingston* v. *Wider*, id. 302.

The assessment was made before any work had been done.

The only ground, however, on which special assessments are imposed is that the property assessed is benefited. *Wright* v. *Boston*, 9 Cush. 232, 241; *Schinly* v. *Commonwealth*, 30 Pa. 29, 57; *Sharp* v. *Speir*, 4 Hill, 82; *Matter of Opening Streets*, 20 La. Ann. 497; *Reeves* v. *Treasurer Wood County*, 8 Ohio St. 338.

In this case, no benefit whatever inured to the plaintiff in error, and the price was exorbitant.

Mr. Philip Phillips, contra.

The fifth amendment to the Constitution, which declares that no person shall be "deprived of life, liberty, or property without due process of law, nor shall private property be taken for public use without just compensation," is a limitation on the powers granted by that instrument to the Federal government, and not a restraint upon the States. *Barron* v. *The Mayor and City Council of Baltimore*, 7 Pet. 243; *Withers* v. *Buckley et al.*, 20 How. 84; *Twitchell* v. *The Commonwealth*, 7 Wall. 321.

The fourteenth amendment, which operates on the legislation of the several States, in no wise affects their police power. *Commonwealth* v. *Alger*, 7 Cush. (Mass.) 84; *Thorpe* v. *Rutland Railroad*, 27 Vt. 149; *Slaughter-House Cases*, 16 Wall. 36; Cooley, Const. Lim. 509; Dillon, Corp., sect. 598.

The power here in question is of that character, and the mode of exercising it presents no matter which can be re-examined here.

MR. JUSTICE MILLER delivered the opinion of the court.

The objections raised in the State courts to the assessment were numerous and varied, including constitutional objections to the statute under which the assessment was made, and alleged departures from the requirements of the statute itself. And although counsel for the plaintiff in error concede, in the first sentence of their brief, that the only Federal question is, whether the judgment is not in violation of that provision of the Constitution which declares that "no State shall deprive any person of life, liberty, or property without due process of law, the argument seems to suppose that this court can correct any other error which may be found in the record.

1. It is said that the legislature had no right to organize a

private corporation to do the work, and, by statute, to fix the price at which the work should be done.

2. That the price so fixed is exorbitant.

3. That there may be a surplus collected under the assessment beyond what is needed for the work, which must in that event go into the city treasury.

Can it be necessary to say, that if the work was one which the State had authority to do, and to pay for it by assessments on the property interested, that on such questions of method and detail as these the exercise of the power is not regulated or controlled by the Constitution of the United States?

Of a similar character is the objection much insisted on, that, under the statute, the assessment is actually made before, instead of after, the work is done. As a question of wisdom, — of judicious economy, — it would seem better in this, as in other works which require the expenditure of large sums of money, to secure the means of payment before becoming involved in the enterprise; and if this is not due process of law, it ought to be.

There are other objections urged by counsel which may be referred to hereafter, but we pause here to consider a moment the clause of the Constitution relied on by plaintiff in error. It is part of sect. 1 of the fourteenth amendment. The section consists of two sentences. The first defines citizenship of the States and of the United States. The next reads as follows: —

"No State shall make or enforce any law which shall abridge the privileges or immunities of citizens of the United States; nor shall any State deprive any person of life, liberty, or property without due process of law, nor deny to any person within its jurisdiction the equal protection of the law."

The section was the subject of very full and mature consideration in *Slaughter-House Cases*, 16 Wall. 36. In those cases, an act of the Louisiana legislature, which had granted to a corporation created for the purpose the exclusive right to erect and maintain a building for the slaughter of live animals within the city, was assailed as being in conflict with this section. The right of the State to use a private corporation and confer upon it the necessary powers to carry into effect sanitary regu-

lations was affirmed, and the decision is applicable to a similar objection in the case now before us. The argument of counsel and the opinion of the court in those cases were mainly directed to that part of the section which related to the privileges and immunities of citizens; and, as the court said in the opinion, the argument was not much pressed, that the statute deprived the butchers of their property without due process of law. The court held that the provision was inapplicable to the case.

The prohibition against depriving the citizen or subject of his life, liberty, or property without due process of law, is not new in the constitutional history of the English race. It is not new in the constitutional history of this country, and it was not new in the Constitution of the United States when it became a part of the fourteenth amendment, in the year 1866.

The equivalent of the phrase "due process of law," according to Lord Coke, is found in the words "law of the land," in the Great Charter, in connection with the writ of *habeas corpus*, the trial by jury, and other guarantees of the rights of the subject against the oppression of the crown. In the series of amendments to the Constitution of the United States, proposed and adopted immediately after the organization of the government, which were dictated by the jealousy of the States as further limitations upon the power of the Federal government, it is found in the fifth, in connection with other guarantees of personal rights of the same character. Among these are protection against prosecutions for crimes, unless sanctioned by a grand jury; against being twice tried for the same offence; against the accused being compelled, in a criminal case, to testify against himself; and against taking private property for public use without just compensation.

Most of these provisions, including the one under consideration, either in terms or in substance, have been embodied in the constitutions of the several States, and in one shape or another have been the subject of judicial construction.

It must be confessed, however, that the constitutional meaning or value of the phrase "due process of law," remains to-day without that satisfactory precision of definition which judicial decisions have given to nearly all the other guarantees of per-

sonal rights found in the constitutions of the several States and of the United States.

It is easy to see that when the great barons of England wrung from King John, at the point of the sword, the concession that neither their lives nor their property should be disposed of by the crown, except as provided by the law of the land, they meant by "law of the land" the ancient and customary laws of the English people, or laws enacted by the Parliament of which those barons were a controlling element. It was not in their minds, therefore, to protect themselves against the enactment of laws by the Parliament of England. But when, in the year of grace 1866, there is placed in the Constitution of the United States a declaration that "no State shall deprive any person of life, liberty, or property without due process of law," can a State make any thing due process of law which, by its own legislation, it chooses to declare such? To affirm this is to hold that the prohibition to the States is of no avail, or has no application where the invasion of private rights is effected under the forms of State legislation. It seems to us that a statute which declares in terms, and without more, that the full and exclusive title of a described piece of land, which is now in A., shall be and is hereby vested in B., would, if effectual, deprive A. of his property without due process of law, within the meaning of the constitutional provision.

A most exhaustive judicial inquiry into the meaning of the words "due process of law," as found in the fifth amendment, resulted in the unanimous decision of this court, that they do not necessarily imply a regular proceeding in a court of justice, or after the manner of such courts. *Murray's Lessee et al.* v. *Hoboken Land and Improvement Co.*, 18 How. 272. That was an action of ejectment, in which both parties asserted title under Samuel Swartwout: the plaintiff, by virtue of an execution, sale, and deed, made on a judgment obtained in the regular course of judicial proceedings against him; and the defendant, by a seizure and sale by a marshal of the United States, under a distress-warrant issued by the solicitor of the treasury, under the act of Congress of May 20, 1820.

When an account against an officer who held public money had been adjusted by the proper auditing officer of the treasury,

and the party who was found indebted neglected or refused to pay, that statute authorized the solicitor of the treasury to issue a distress-warrant to the marshal of the proper district, which, from the date of its levy and the record thereof in the District Court, should be a lien on the property on which it was levied for the amount due; and the marshal was required to collect the amount, by sale of said property, or that of the sureties on his official bond. It was argued that these proceedings deprived Swartwout of his property without due process of law. "The objections," says the court, "raise the questions whether, under the Constitution of the United States, a collector of the customs, from whom a balance of account has been found to be due by accounting officers of the treasury, designated for that purpose by law, can be deprived of his liberty or property, in order to enforce payment of that balance, without the exercise of the judicial power of the United States, and yet by due process of law, within the meaning of those terms in the Constitution; and, if so, secondly, whether the warrant in question was such due process of law."

The court held that the power exercised was executive, and not judicial; and that the issue of the writ, and the proceedings under it, were due process of law within the meaning of the Constitution. The history of the English mode of dealing with public debtors and enforcing its revenue laws is reviewed, with the result of showing that the rights of the crown, in these cases, had always been enforced by summary remedies, without the aid of the usual course of judicial proceedings, though the latter were resorted to in the Exchequer Court, when the officers of the government deemed it advisable. And it was held that such a course was due process of law within the meaning of that phrase as derived from our ancestors and found in our Constitution.

It is not a little remarkable, that while this provision has been in the Constitution of the United States, as a restraint upon the authority of the Federal government, for nearly a century, and while, during all that time, the manner in which the powers of that government have been exercised has been watched with jealousy, and subjected to the most rigid criticism in all its branches, this special limitation upon its powers has rarely been invoked

in the judicial forum or the more enlarged theatre of public discussion. But while it has been a part of the Constitution, as a restraint upon the power of the States, only a very few years, the docket of this court is crowded with cases in which we are asked to hold that State courts and State legislatures have deprived their own citizens of life, liberty, or property without due process of law. There is here abundant evidence that there exists some strange misconception of the scope of this provision as found in the fourteenth amendment. In fact, it would seem, from the character of many of the cases before us, and the arguments made in them, that the clause under consideration is looked upon as a means of bringing to the test of the decision of this court the abstract opinions of every unsuccessful litigant in a State court of the justice of the decision against him, and of the merits of the legislation on which such a decision may be founded. If, therefore, it were possible to define what it is for a State to deprive a person of life, liberty, or property without due process of law, in terms which would cover every exercise of power thus forbidden to the State, and exclude those which are not, no more useful construction could be furnished by this or any other court to any part of the fundamental law.

But, apart from the imminent risk of a failure to give any definition which would be at once perspicuous, comprehensive, and satisfactory, there is wisdom, we think, in the ascertaining of the intent and application of such an important phrase in the Federal Constitution, by the gradual process of judicial inclusion and exclusion, as the cases presented for decision shall require, with the reasoning on which such decisions may be founded. This court is, after an experience of nearly a century, still engaged in defining the obligation of contracts, the regulation of commerce, and other powers conferred on the Federal government, or limitations imposed upon the States.

As contributing, to some extent, to this mode of determining what class of cases do not fall within its provision, we lay down the following proposition, as applicable to the case before us:—

That whenever by the laws of a State, or by State authority, a tax, assessment, servitude, or other burden is imposed upon property for the public use, whether it be for the whole

State or of some more limited portion of the community, and those laws provide for a mode of confirming or contesting the charge thus imposed, in the ordinary courts of justice, with such notice to the person, or such proceeding in regard to the property as is appropriate to the nature of the case, the judgment in such proceedings cannot be said to deprive the owner of his property without due process of law, however obnoxious it may be to other objections.

It may violate some provision of the State Constitution against unequal taxation; but the Federal Constitution imposes no restraints on the States in that regard. If private property be taken for public uses without just compensation, it must be remembered that, when the fourteenth amendment was adopted, the provision on that subject, in immediate juxtaposition in the fifth amendment with the one we are construing, was left out, and this was taken. It may possibly violate some of those principles of general constitutional law, of which we could take jurisdiction if we were sitting in review of a Circuit Court of the United States, as we were in *Loan Association* v. *Topeka* (20 Wall. 655). But however this may be, or under whatever other clause of the Federal Constitution we may review the case, it is not possible to hold that a party has, without due process of law, been deprived of his property, when, as regards the issues affecting it, he has, by the laws of the State, a fair trial in a court of justice, according to the modes of proceeding applicable to such a case. This was clearly stated by this court, speaking by the Chief Justice, in *Kennard* v. *Morgan* (92 U. S. 480), and, in substance, repeated at the present term, in *McMillan* v. *Anderson* (95 id. 37).

This proposition covers the present case. Before the assessment could be collected, or become effectual, the statute required that the tableau of assessments should be filed in the proper District Court of the State; that personal service of notice, with reasonable time to object, should be served on all owners who were known and within reach of process, and due advertisement made as to those who were unknown, or could not be found. This was complied with; and the party complaining here appeared, and had a full and fair hearing in the court of the first instance, and afterwards in the Supreme Court. If this be not

due process of law, then the words can have no definite meaning as used in the Constitution.

One or two errors assigned, and not mentioned in the earlier part of this opinion, deserve a word or two.

It is said that the plaintiff's property had previously been assessed for the same purpose, and the assessment paid. If this be meant to deny the right of the State to tax or assess property twice for the same purpose, we know of no provision in the Federal Constitution which forbids this, or which forbids unequal taxation by the States. If the act under which the former assessment was made is relied on as a contract against further assessments for the same purpose, we concur with the Supreme Court of Louisiana in being unable to discover such a contract.

It is also said that part of the property of plaintiff which was assessed is not benefited by the improvement. This is a matter of detail with which this court cannot interfere, if it were clearly so; but it is hard to fix a limit within these two parishes where property would not be benefited by the removal of the swamps and marshes which are within their bounds.

And lastly, and most strongly, it is urged that the court rendered a personal judgment against the owner for the amount of the tax, while it also made it a charge upon the land. It is urged with force, — and some highly respectable authorities are cited to support the proposition, — that while for such improvements as this a part, or even the whole, of a man's property connected with the improvement may be taken, no personal liability can be imposed on him in regard to it. If this were a proposition coming before us sitting in a State court, or, perhaps, in a circuit court of the United States, we might be called upon to decide it; but we are unable to see that any of the provisions of the Federal Constitution authorizes us to reverse the judgment of a State court on that question. It is not one which is involved in the phrase "due process of law," and none other is called to our attention in the present case.

As there is no error in the judgment of the Supreme Court of Louisiana, of which this court has cognizance, it is

Affirmed.

MR. JUSTICE BRADLEY. In the conclusion and general tenor of the opinion just read, I concur. But I think it narrows the scope of inquiry as to what is due process of law more than it should do.

It seems to me that private property may be taken by a State without due process of law in other ways than by mere direct enactment, or the want of a judicial proceeding. If a State, by its laws, should authorize private property to be taken for public use without compensation (except to prevent its falling into the hands of an enemy, or to prevent the spread of a conflagration, or, in virtue of some other imminent necessity, where the property itself is the cause of the public detriment), I think it would be depriving a man of his property without due process of law. The exceptions noted imply that the nature and cause of the taking are proper to be considered. The distress-warrant issued in the case of *Murray's Lessee et al.* v. *Hoboken Land and Improvement Co.* (18 How. 272) was sustained, because it was in consonance with the usage of the English government and our State governments in collecting balances due from public accountants, and hence was "due process of law." But the court in that case expressly holds that "it is manifest that it was not left to the legislative power to enact any process which might be devised. The article is a restraint on the legislative, as well as on the executive and judicial, power of the government, and cannot be so construed as to leave Congress free to make any process 'due process of law' by its mere will." p. 276. I think, therefore, we are entitled, under the fourteenth amendment, not only to see that there is some process of law, but "due process of law," provided by the State law when a citizen is deprived of his property; and that, in judging what is "due process of law," respect must be had to the cause and object of the taking, whether under the taxing power, the power of eminent domain, or the power of assessment for local improvements, or none of these: and if found to be suitable or admissible in the special case, it will be adjudged to be "due process of law;" but if found to be arbitrary, oppressive, and unjust, it may be declared to be not "due process of law." Such an examination may be made without interfering with that large discretion

which every legislative power has of making wide modifications in the forms of procedure in each case, according as the laws, habits, customs, and preferences of the people of the particular State may require.

ARTHUR v. MORRISON.

1. Veils manufactured of silk, and commercially known as "crape veils," and not otherwise, do not fall within the enumerating clause of the eighth section of the act of June 30, 1864 (13 Stat. 210), whereby "silk veils" are dutiable at sixty per cent *ad valorem*, but are within its concluding clause touching manufactures of silk, or of which silk is the component material of chief value, not otherwise provided for, and are, therefore, subject to a duty of fifty per cent *ad valorem*.
2. The designation of an article of commerce by merchants and importers, when it is clearly established, determines the construction of the tariff law when that article is mentioned.
3. The intent of Congress to impose, under the act of 1864, duties upon imported articles according to their commercial designation, and to recognize this rule of construing statutes, is manifest from the first section of the act of Feb. 8, 1875 (18 Stat. 307), which subjects to a duty of sixty per cent "all goods, wares, and merchandise not herein otherwise provided for, made of silk, or of which silk is the component material of chief value, irrespective of the classification thereof for duty by or under previous laws, or of their commercial designation."
4. A well-known rule of statutory construction remains in force until it shall be abolished by Congress.

ERROR to the Circuit Court of the United States for the Southern District of New York.

Morrison and others brought this suit to recover the sum exacted from them by Arthur, the collector of the port of New York, in excess of what they protested was the lawful duty upon certain imported veils.

The portion of the eighth section of the act of June 30, 1864, c. 171, 13 Stat. 210, applicable to the case, is as follows:

"That on and after the day and year aforesaid, in lieu of the duties heretofore imposed by law on the articles hereinafter mentioned, there shall be levied, collected, and paid, on the goods, wares, and merchandise enumerated and provided for in this section, imported from foreign countries, the following duties and rates of duties; that is to say, . . . on silk vestings, pongees, shawls, scarfs,

mantillas, pelerines, handkerchiefs, veils, laces, shirts, drawers, bonnets, hats, caps, turbans, chemisettes, hose, mitts, aprons, stockings, gloves, suspenders, watch-chains, webbing, braids, fringes, galloons, tassels, cords, and trimmings, — sixty per cent *ad valorem*. On all manufactures of silk, or of which silk is the component material of chief value, not otherwise provided for, fifty per cent *ad valorem*."

The collector pleaded that the moneys sued for were a part of the lawful duty of sixty per cent *ad valorem* for "silk veils" imported by the plaintiffs. They replied, that the veils were not "silk veils," but a manufacture of silk, and were "crape veils;" that at the time of the passage of the act of June 30, 1864, they were commercially known among importers and dealers, and were bought and sold, as "crape veils," and never otherwise, and were liable to a duty of fifty per cent *ad valorem* as a manufacture of silk. The defendant demurred to the replication. The demurrer was overruled, and judgment rendered for the plaintiffs. The defendant sued out this writ of error.

Mr. Assistant-Attorney-General Smith for the plaintiff in error.

Mr. Edward Hartley, contra.

MR. JUSTICE HUNT delivered the opinion of the court.

It was undisputed upon the pleadings that the veils in question were commercially known among importers and dealers, and were bought and sold, as "crape veils," and never otherwise.

The question of law thus presented is, whether veils, which are not commonly called "silk veils," but are veils manufactured of silk, and are known commercially as "crape veils," and not otherwise, are liable to a duty of sixty per cent.

The argument of the government is, that the statute in question is a comprehensive one, intended to include all articles made of silk, or of which silk is the component material of chief value, specifically enumerating in its first branch a variety of subjects on which should be imposed a duty of sixty per cent, and further providing, that on all manufactures from that material not otherwise provided for a duty of fifty per cent should be levied and collected. Silk veils, it is said, are specifically enumerated as being liable to a duty of sixty per

cent, and the articles in question being veils of which the material is silk, are within the enumerating clause of the statute.

If this were all, the argument would be a strong one. But the fact that the veils in question are universally known and recognized among merchants and importers as crape veils, and not otherwise, and are never called or known as silk veils, is to be taken into the account. Although crape is shown to be a material of silk, to which a certain resinous substance has been applied, neither the merchant nor the ordinary buyer understands them to be identical. Neither the merchant who should order a case of crapes and receive one of silk goods, or who should order silk and receive crape, nor the individual purchaser who should order a dress of silk and receive one of crape, or should order crape for mourning and receive silk, would deem that the order had been properly filed. The general understanding concurs in this respect with that of the trader and importer, and must determine the construction to be given to the language of the statute. Especially should this view prevail as to laws made for the government of the importer. His business is regulated by them; and it is but reasonable that, like the language of marine policies and the terms of the law-merchant, supposed to be especially applicable to this class, these laws should be construed as universally understood by the importer and trader. Obsolete words, or those whose meaning is differently understood by the writer and the reader, produce disorder and confusion. Importations from foreign countries are necessarily made with reference to the duties to be paid upon their entry into the ports of this country. If these are not reasonably uniform, and cannot be ascertained, the transaction of business will be impossible. No man can determine whether his venture will enrich him, or make him a bankrupt. In *Lattimer* v. *Smythe*, it is said, "Where general terms are used, the terms are to be taken in their ordinary and comprehensive meaning, unless it is shown that they have, in their commercial use, acquired a special and restricted meaning." 17 Int. Rev. Rec. 12. In that case, and in *Jaffray* v. *Murphy* (19 id. 143), which is to the same effect, the question arose under the silk section of the act of 1864.

In the present case, it is admitted by the demurrer that the goods in question are never understood by merchants and importers to be silk veils. They cannot, therefore, be said to fall within the enumerating clause of the statute, but come under the head of such as are not otherwise provided for, and are subject to the duty of fifty per cent only. *Homer* v. *The Collector*, 1 Wall. 486; *Reiche* v. *Smythe*, 13 id. 162; *Movius* v. *Arthur*, 95 U. S. 144; *United States* v. *Two Hundred Chests of Tea*, 9 Wheat. 430; *Elliott* v. *Swartwout*, 10 Pet. 137; *Curtis* v. *Martin et al.*, 3 How. 106; *Maillard* v. *Lawrence*, 16 id. 251.

In the last case, Mr. Justice Daniel says: "The popular or received import of words furnishes the general rule for the interpretation of public laws, as well as of private and social transactions; and when the legislature adopts such language to define and promulgate their action, the just conclusion must be, that they not only themselves comprehended the meaning of the language they have selected, but have chosen it with reference to the known apprehension of those to whom it is delivered, and for whom it is designed to constitute a rule of conduct, — namely, the community at large."

In *Curtis* v. *Martin et al.* (*supra*), Chief Justice Taney says: "The question brought up by this exception cannot now be considered an open one. In the case of *United States* v. *Two Hundred Chests of Tea* (9 Wheat. 430), the court decided, that in imposing duties Congress must be understood as describing the articles upon which the duty is imposed, according to the commercial understanding of the terms used in the law, in our own markets. This doctrine was reaffirmed in the case of the *United States* v. *One Hundred and Twelve Casks of Sugar* (8 Pet. 277), and again in 10 Pet. 151, in the case of *Elliott* v. *Swartwout*. It follows that the duty upon cotton bagging must be considered as imposed upon those articles only which are known and understood as such in commerce in the year 1832, when the law was passed imposing the duty."

That Congress intended duties under the act of 1864 to be imposed according to their commercial designation, and that it understood this to be the rule of construing statutes, is also manifest from the first section of the act of Feb. 8, 1875 (18 Stat. 307), upon the subject we are considering.

A duty of sixty per cent is there imposed "on all goods, wares, and merchandise, not herein otherwise provided for, made of silk, or of which silk is the component material of chief value, irrespective of the classification thereof for duty by or under previous laws, or of their commercial designation." It was, no doubt, within the power of Congress to abolish a well-known rule of construction, as it did in the act of 1875; but, until so abolished, it remained in force.

The case was well decided. The judgment must be affirmed; and it is

So ordered.

ARTHUR v. LAHEY.

1. The rules, that for the purpose of the tariff laws the commercial designation of an article among traders and importers, when clearly established, fixes its character, and that when Congress has designated an article by a specific name, and imposed a duty upon it, general terms in a subsequent act or a later part of the same act, although sufficiently broad to comprehend such article, are not applicable to it, are not deprived of their ordinary application by the expression "not otherwise provided for," in the eighth section of the act of June 30, 1864 (13 Stat. 210).
2. The distinctions made by importers and traders between "silk laces" and "thread laces" have been plainly recognized by Congress, and have run through its acts for more than thirty years.
3. Under the nineteenth section of the act of March 2, 1861 (12 Stat. 190), as amended by the sixth section of the act of July 14, 1862 (id. 550), thread laces are *eo nomine* subject to a duty of thirty per cent *ad valorem*.
4. *Smythe* v. *Fiske* (23 Wall. 374) was not intended to overrule *Homer* v. *The Collector* (1 id. 486), *Reiche* v. *Smythe* (13 id. 162), or the cases referred to in them, nor was *Movius* v. *Arthur* (95 U. S. 144) understood to be in conflict with it.
5. Those cases commented upon and explained.

ERROR to the Circuit Court of the United States for the Southern District of New York.

In the years 1872 and 1873, Lahey & Co. imported from France certain articles of silk manufacture, on which Arthur, the collector of the port of New York, imposed and collected a duty of sixty per cent, under the eighth section of the act of June 30, 1864. 13 Stat. 210. Among the articles so imported was a quantity of laces which the importers insisted were commer-

cially known as "thread laces," and liable to a duty of only thirty per cent *ad valorem*, under the nineteenth section of the act of March 2, 1861 (12 id. 190), as amended by the sixth section of the act of July 14, 1862 (id. 550). Having paid, under protest, the duty exacted, the importers brought this action for the excess beyond thirty per cent. The judge at the trial submitted to the jury the question, whether the articles were commercially known as "thread laces;" and the jury having found that they were, there was a verdict for the plaintiffs. Judgment was rendered thereon, and the collector sued out a writ of error.

Mr. Assistant-Attorney-General Smith, for the plaintiff in error.

Mr. Edwards Pierrepont and *Mr. William Stanley*, *contra*.

MR. JUSTICE HUNT delivered the opinion of the court.

Referring to the case of *Arthur* v. *Morrison* (*supra*, p. 108) for a fuller explanation of the views of the court, we assume, at this point, as established, the following propositions. A citation and examination of some of the authorities are given hereafter.

1. The commercial designation of an article among traders and importers, where such designation is clearly established, fixes its character for the purpose of the tariff laws.

2. When Congress has designated an article by a specific name, and by such name imposed a duty upon it, general terms in a subsequent act, or in a later part of the same act, although sufficiently broad to comprehend such article, are not applicable to it. *Homer* v. *The Collector*, 1 Wall. 486; *Reiche* v. *Smythe*, 13 id. 162; *Smythe* v. *Fiske*, 23 id. 374; *Movius* v. *Arthur*, 95 U. S. 144.

The section of the act is fully set forth in the preceding case.

The government now contends that this section of the tariff act of June, 1864, was intended to embrace every article made of silk; that the concluding clause, laying a duty of fifty per cent upon all manufactures of silk not otherwise provided for, means not otherwise provided for in this section; and that every article of which silk was the component of chief value was intended to be covered by the section. Hence it is argued that recourse cannot be had to preceding statutes to determine

the duty payable upon lace made of silk, however it might be commercially designated.

Under the authorities to which we have referred, this view cannot be maintained. A specific designation *eo nomine* must prevail over general words, and a commercial designation is the standard by which the dutiable character of the article is fixed.

It was proved by the witnesses, and found by the jury, that, although made of silk, the laces in question were commercially known as thread laces. Whether an article is thread lace, it was shown, depended upon the mode of its manufacture, — as upon a cushion, from thread wound on bobbins moved by hand; and that it was equally thread lace whether made of cotton or silk, and whether white or black; and that there are also articles commercially known as silk laces, and articles commercially known as cotton laces; and that thread lace made of linen had been practically unknown for many years.

These distinctions are also well known and recognized in the tariff laws of the country, of which the following is an illustration. In the years mentioned, acts were passed in which the articles were named as here stated, with the different duties upon each.

JULY 30, 1846.

Cotton laces	25 per cent.
Thread laces	20 "

9 Stat. 46, 47.

MARCH 3, 1857.

Cotton laces	19 per cent.
Thread laces	15 "

11 id. 192.

MARCH 2, 1861.

Silk laces	30 per cent.
Cotton laces	20 "
Thread laces	20 "
Cotton lace, colored	30 "

12 id. 186, 189, 190, 191.

AUG. 5, 1861.

Silk laces	40 per cent.

id. 293.

JULY 14, 1862.

Thread laces	30 per cent.
Cotton laces	25 "

Id. 550, 556, sects. 6, 13.

JUNE 30, 1864.

Silk lace	60 per cent.
Cotton lace	35 "

13 id. 209, 210.

REV. STAT.

Cotton lace, colored	35 per cent.
Cotton lace	35 "
Thread lace	30 "
Silk laces	60 "

Rev. Stat., pp. 464, 466, 472.

FEB. 8, 1875.

18 Stat. 307.

Congress here plainly recognizes the distinction made by the importers and traders, and establishes one rate of duty for silk laces and another for thread laces. The distinctions have run through the acts of Congress for more than thirty years; and we do not see how the judge at the trial could have adopted any other rule than the one complained of, to leave it to the jury whether the article was thread lace, a known commercial article, liable to duty as such, *eo nomine*.

The same reasoning will settle the question as to the application of the fifty per cent duty under the residuary clause of the act of 1864.

The case of *Smythe* v. *Fiske* (*supra*) is relied upon by the appellant. That case was not intended to overrule *Homer* v. *The Collector* or *Reiche* v. *Smythe* (*supra*), or the cases referred to in those authorities, nor was *Movius* v. *Arthur* (*supra*) understood to be in conflict with it. *Smythe* v. *Fiske* simply decided that silk ties, not being specifically enumerated in any of the acts, either of 1864 or of preceding years, the rate fixed by the act of 1864 was the correct rate for their assessment. To this we now hold.

It is not necessary to the correctness of that decision to hold that the act of 1864 forbids a reference to any previous acts to determine the duty upon articles mentioned in such acts *eo nomine*, and not specifically named in the act of 1864.

That such reference is proper was held in *Homer* v. *The Collector*, *supra*. The tariff act of 1840 had imposed a duty of forty per cent upon the articles enumerated in the schedule referred to, among which were "almonds," by name. By the first section of the tariff act of 1857, these duties were reduced to thirty per cent. The second section made "fruits, green, ripe, or dried," liable to a duty of eight per cent only. In holding that almonds were liable to the duty of thirty per cent, and were not embraced in the general terms of the second section, Mr. Justice Nelson says: "The argument is, that almonds are dried fruit, and hence are provided for in the second section of the act of 1857; and evidence was offered to show that such was the commercial sense of the term. But this inquiry had nothing to do with it, . . . for certainly such proof could not exist or be found, in the sense of commercial usage, under any of the tariff acts, as duty had been imposed on almonds *eo nomine* almost immemorially, at least since the duty act of 1804, and continued in the duty acts of 1816, 1832, 1842, 1846. . . . Full effect can be given to the term 'fruit' 'dried,' without the very forced construction to bring within it the article in question." The effect of both the acts was thus continued in force.

The same principle of reference to the former statute was sustained in *Reiche* v. *Smythe*, *supra*. The case was this: The twenty-third section of the act of March 2, 1861, provided that "animals living, of all kinds; birds, singing and others; land and water fowls," — shall be exempt from duty.

The act of May, 1866, provided that a duty of twenty per cent *ad valorem* should be imposed "on all horses, mules, cattle, sheep, hogs, and other live animals." After the passage of this act, and by virtue of it, the collector exacted the duty of twenty per cent upon a lot of canary birds, which was paid under protest, and the question was as to its legality.

In delivering the opinion of the court, Mr. Justice Davis said: The act of 1866 is comprehensive enough to include birds; and

if there had been no previous legislation, there would be justification for the position that Congress did not intend to narrow the meaning of the words. The act of 1861, he says, intended birds to be admitted free of duty, and the acts of 1866 must be limited to animals *ejusdem generis* with cattle, sheep, and horses. The two acts, he says, are *in pari materia*, both remaining in force, — that of 1861 admitting birds free of duty, and that of 1866 imposing the duty on horses and like animals, notwithstanding the general terms of the latter. The birds were, therefore, held to be exempt from duty.

In *Movius* v. *Arthur* (*supra*), the same principle of construing both acts *in pari materia*, to remain of force, prevailed. The act of 1861 (12 Stat. 192) imposed a duty of thirty per cent on "japanned leather" *eo nomine*. By the act of 1862 (12 id. 556), an additional duty of five per cent was imposed upon the same article by name. The act of 1872 (17 id. 230) enacted that, in lieu of existing duties, there should be imposed on "skins dressed and finished" ninety per cent only of the duties by law imposed, "it being the intent of this section to reduce the duties ten per cent on all leather not herein otherwise provided for." Although this act contained the words, "not herein otherwise provided for," — that is, not provided for in this act or this section, — it was held that the two statutes must be construed as both to be in force, and that "japanned leather," being *eo nomine* described in the former act, was not taken out of it by the general words of the later act, and that the larger duties of the acts of 1861 and 1862 were legally chargeable.

It will be observed, that, in two other sections, besides the eighth, of the act of 1864, manufactures of silk are referred to, indicating that the entire subject was not intended to be disposed of in that section. Thus, in sect. 5, p. 208, a duty of ten per cent is imposed on "lastings of mohair, silk, twist," &c. Again, in the same section, p. 207, a duty of fifty per cent *ad valorem* is imposed "on flannels composed in part of silk." See *Stewart* v. *Maxwell* (16 How. 150, 160) and *Penington* v. *Core* (2 Cranch, 33), on the point that the revenue acts are one system, and are to be read together.

By the twenty-second section of the act of 1864, it is enacted, "that all acts and parts of acts repugnant to the provisions of

this act be, and the same are hereby, repealed; . . . and provided further, that the duties upon all goods, wares, and merchandise imported from foreign countries, not provided for in this act, shall be and remain as they were, according to existing laws prior to the 29th of April, 1864." 13 Stat. 216.

This may well be construed to retain duties on articles specifically enumerated in former acts, different from those imposed by the act of 1864, but not specifically named therein, and although the same class of subjects may be referred to in the act of 1864.

The judgment must be affirmed, upon the grounds following:

1. The commercial designation of an article among traders and importers, when clearly established, fixes its character for the purpose of the tariff laws.

2. When Congress has designated an article by its specific name, and imposed a duty upon it by such name, general terms in a subsequent act, or in a later part of the same act, although sufficiently broad to comprehend such article, are not applicable to it.

3. That the expression, "not otherwise provided for," in the eighth section of the act of 1864, does not deprive these rules of their ordinary application.

Judgment affirmed.

ARTHUR v. UNKART.

1. In 1873, certain gloves, commercially known as "silk plaited gloves," or "patent gloves," made on frames and manufactured in part of silk and in part of cotton, cotton being the component part of chief value, were imported at New York, upon which the collector imposed a duty of sixty per cent *ad valorem*, under the eighth section of the act of June 30, 1864 (13 Stat. 210). *Held*, that the articles did not come within the general terms of that section, because, 1st, they were not, by reason of their component materials, silk gloves; 2d, they were commercially known only as "plaited gloves," or "patent gloves;" and, 3d, they did not fall within the concluding clause, silk not being the component part of chief value.
2. Not being included in the act of 1864, the articles were dutiable under the twenty-second section of the act of March 2, 1861 (12 Stat. 191), and the thirteenth section of the act of July 14, 1862 (id. 556), where they are enumerated as gloves made on frames.
3. In an action against a collector of customs to recover the amount of duties on imports alleged to have been exacted in violation of law, the burden of proof is upon the plaintiff.

ERROR to the Circuit Court of the United States for the Southern District of New York.

In May, 1873, Unkart & Co. imported into New York certain merchandise, upon which the plaintiff in error, the collector of the port, assessed and collected a duty of sixty per cent, under the eighth section of the act of June 30, 1864 (13 Stat. 210), which imposed a duty of sixty per cent on various articles of clothing made of silk; naming hats, gloves, &c. The concluding clause of the section is as follows: "On all manufactures of silk, or of which silk is the component of chief value, not otherwise provided for, fifty per cent *ad valorem*."

Against the imposition of that rate of duty the importers protested in due form, upon the ground that such merchandise, being gloves and similar articles made on frames, not otherwise provided for, is only liable to duty under the twenty-second section of the act of March 2, 1861, and the thirteenth section of the act of July 14, 1862, at the rate of thirty-five per cent *ad valorem*, less ten per cent; under the second section of the act of June 6, 1872, as a manufacture of cotton, or of which cotton is the component part of chief value.

Upon the trial of this action, which was to recover the excess so paid, it was conceded that the articles in question were gloves; that they were commercially known as "silk-plaited gloves," or "patent gloves;" that they were manufactured in part of silk and in part of cotton, and were made on frames.

The court charged the jury, that, while the burden of proof was upon the plaintiffs to show that they had fulfilled all the formal, ordinary prerequisites to bringing their action, it was upon the defendant to justify his exaction of the duty imposed, so that it was for them to be satisfied that the evidence fairly preponderated in favor of the defendant, that the materials which were the component of chief value in the gloves in question were silk; otherwise, the plaintiffs were entitled to a verdict, there being no question on the evidence but that the prerequisites in regard to which the burden rested upon the plaintiffs had been complied with. The jury found that cotton was the chief component of value in the gloves, and that the value of the silk therein was less than that of the cotton, and gave their verdict for the plaintiffs.

Mr. Assistant-Attorney-General Smith for the plaintiff in error.
Mr. Stephen G. Clarke, contra.

MR. JUSTICE HUNT delivered the opinion of the court.

The twenty-second section of the act of March 2, 1861 (12 Stat. 191), provided a duty of thirty per cent on many articles, and, among them, "caps, gloves, leggins, mits, socks, stockings, wove shirts and drawers, and all similar articles made on frames, of whatever material composed, worn by men, women, or children, and not otherwise provided for."

The thirteenth section of the act of July 14, 1862 (id. 556), increases this duty by the same descriptive terms, five per cent *ad valorem.*

By the act of June 6, 1872 (17 id. 230), the duties upon manufactures of cotton, having cotton as the component of chief value, were reduced ten per cent.

The articles in question did not come within the general terms of the eighth section of the act of 1864, for these reasons: 1st, They were not silk gloves, by reason of their component materials being composed of silk and cotton, the latter material preponderating; 2d, they were commercially known as "plaited gloves," or "patent gloves," and not as silk gloves.

They did not fall within the concluding clause, because silk was not the component of chief value. The facts here stated are founded upon the concessions of the parties at the trial and upon the verdict of the jury.

Not being included in the act of 1864, the articles are dutiable under the acts of 1861 and 1862, where they are enumerated as gloves made on frames, and by the act of 1862, which adds five per cent to the duty of 1861.

The suggestion is made that the articles may be taxed under the similitude clause of the act of Aug. 30, 1842. 5 Stat. 565; Rev. Stat., sect. 2499. This provision, by its terms, applies to non-enumerated articles only (*Stuart* v. *Maxwell*, 16 How. 150); and no such claim was made on the trial that it applied to this case. Among the ten carefully prepared points presenting the views of the government, there is no reference made to the similitude act of 1842. Neither the collector in imposing the tax, nor the counsel at the trial, professed to act under or

to demand any advantage from the act of 1842. The right of the government was placed exclusively upon the act of 1864. Upon the point of the rate of duties to which the goods were liable, we are of the opinion that the importers were right, and were entitled to a return of the excess paid by them.

There is, however, a further question in the case. The counsel for the defendant requested the court to charge, that, in this action to recover for an alleged illegal exaction of duties, it devolved upon the plaintiff to make out his case, by showing the illegality complained of; that the burden of proof was on the plaintiff to satisfy the jury, by a fair preponderance of evidence, as to the character of the materials of the gloves. The court refused this request, but charged the jury "that the burden of proof is upon the defendant to justify his exaction of the duty imposed, so that it is for you to be satisfied that the evidence fairly preponderates in favor of the defendant, that the materials which are the component of chief value are silk, otherwise the plaintiffs are entitled to a verdict."

It is not doubted that it was the duty of the collector, in the first instance, to decide whether the articles imported were dutiable, and at what rate. The statute makes it his duty. Neither can it be doubted that unless protest is made within ten days, and unless an appeal is taken to the Secretary of the Treasury within thirty days after such decision, the decision of the collector on these points is final and conclusive. The statute expressly declares that it shall be so. The decision of the Secretary upon such appeal is also declared by the statute to be final and conclusive, unless a suit be brought to recover any alleged excess of duties within ninety days after such decision, or within ninety days after the payment of duties, if payment be made after such decision. No suit can be maintained until the decision of the Secretary has been had as to any transaction at a point east of the Rocky Mountains, unless his decision has been delayed for more than ninety days. 13 Stat. 214, sect. 14; Rev. Stat., sect. 2931. Express authority to maintain the action is given by the statute of 1845 and the Revised Statutes. 5 Stat. 727; Rev. Stat., sect. 3011.

When an appeal is taken from his decision, the decision of the collector ceases to be conclusive; and the same is true of the

decision of the Secretary of the Treasury. These officers are, however, selected by law for the express purpose of deciding these questions: they are appointed and required to pronounce a judgment in each case; and the conduct, management, and operation of the revenue system seem to require that their decisions should carry with them the presumption of correctness. This rule is not only wise and prudent, but is in accordance with the general principle of law, that an officer acting in the discharge of his duty, upon the subject over which jurisdiction is given to him, is presumed to have acted rightly.

The case may be likened to that of a sheriff who levies upon the property of a debtor, who claims that a portion of it is exempt from seizure upon execution. It is not sufficient that the debtor shall claim the exemption, but he must, by proof of registry when necessary, or that the articles seized are those named in the statute, or are required to make up the amount of the exemption, or in some other mode, prove that articles were exempt, and that thus the seizure was illegal. Both the sheriff and collector have power to act in the first instance upon the question in dispute, and he who insists that such action is in violation of law must make the proof to show it. *Griffin* v. *Lathulu*, 14 Barb. (N. Y.) 456; *Tuttle* v. *Buch*, 41 id. 417; *Van Sickler* v. *Jacobs*, 14 Johns. (N. Y.) 434.

The importers here bring their suit, alleging in their complaint not merely that there was an exaction of duties, but that such exaction was excessive and illegal. The burden of proof is upon the party holding the affirmative of the issue. *Johns* v. *Plowman*, 49 Barb. 472. Mr. Roscoe says: "When the issue involves the charge of culpable omission, it is incumbent on the party making the charge to prove it, although he must prove a negative, for the other party shall be presumed to be innocent until proved to be guilty." Roscoe, Evid. 52, cited 15 Pick. 317, where the issue was upon the materiality of a fact not communicated to the underwriter.

In *Bank of the United States* v. *Davis* (2 Hill (N. Y.), 451), where the question was whether a discount had been made in bills procured from the old Bank of the United States, the court say, that the party alleging the illegality of a contract has the burden of proof, there being nothing illegal upon its face.

To the same purport see *Cuyler* v. *Sanford*, 8 Barb. (N. Y.) 225.

So, on an application to vacate an assessment for a local improvement on the ground of fraud, the burden of proof is on the applicant. *Matter of Petition of Sarah Bassford et al.*, 50 N. Y. 509.

In an action against public officers for a non-feasance, the burden of proof is on the plaintiff. *Mintlan* v. *Rochfeller*, 6 Conn. 276.

Mr. Greenleaf (Greenl. Evid., sect. 80) thus lays down the rule: "So where the negative allegation involves a criminal neglect of duty, official or otherwise, or fraud, or the wrongful violation of actual lawful possession of property, the party making the allegation must prove it; for in these cases the presumption of law, which is always in favor of innocence and quiet possession, is in favor of the party charged;" and many instances are cited.

Again, it is to be observed that in the case of the articles in question, as with most other importations, they were admitted to be liable to some duty. Simply holding the goods for duty was not, therefore, of itself an illegality. It was only when they were held for more duty than the law justified that it became duress and illegal; and, to entitle himself to recover for the illegality, the plaintiff must show such excessive charge. If the collector had no authority in the premises, and could hold the goods for no amount whatever, a different question would arise. But here the very issue was as to amount, and the proof, therefore, of illegal amount rested upon the plaintiff.

The case of *Wilkinson* v. *Greeley* (1 Curt. 63) is cited to sustain the ruling we are considering. It is true that the circuit judge, on the trial of that case, charged that the burden of proof was on the collector to show that the articles were not truly described in the invoice, and were, therefore, subject to the higher duty, and that, on the motion for a rehearing before Mr. Justice Curtis, he assumed that to be the law. It does not, however, appear that the point was made and argued by counsel, or that it received from the learned judge that consideration which would entitle it to be held as an authority. The ruling has never been followed in the circuit where made, so far as

we can learn, and during the last fifteen years we have the authority of Mr. Justice Clifford for saying that the law has always been held in that circuit to be otherwise.

For this error the judgment must be reversed and *a venire de novo* awarded; and it is

So ordered

ARTHUR v. ZIMMERMAN.

1. The distinction between "cotton braids" and "other manufactures of cotton not otherwise provided for," and "hat braids," has been established and recognized by Congress by the acts of March 2, 1861 (12 Stat. 178), and July 14, 1862 (id. 543), and sect. 2504 of the Revised Statutes.
2. "Braids . . . used for making or ornamenting hats," being specifically enumerated in said acts of 1861 and 1862, are subject to the duty thereby prescribed, and not to that imposed by the sixth section of the act of June 30, 1864 (13 Stat. 209), upon "cotton braids, insertings, lace trimmings, or bobbinets, and all other manufactures of cotton not otherwise provided for."

ERROR to the Circuit Court of the United States for the Southern District of New York.

In 1873 and 1874, Zimmerman imported certain goods from France, which were composed of cotton, and commercially known as "hat braids." Arthur, the collector of the port of New York, imposed upon them, and collected, under protest, a duty of ninety per cent of thirty-five per cent *ad valorem*, under the sixth section of the tariff act of 1864 (13 Stat. 209), which imposes that duty upon "cotton braids, insertings, lace trimmings, or bobbinets, and all other manufactures of cotton not otherwise provided for."

It appeared, upon the trial of the suit to recover the excess so paid, that there were goods known as cotton braids, used for other purposes, but that the goods in question were commercially known as "hat braids," and used exclusively for making and trimming hats and bonnets.

The court below, being of the opinion that the articles were only liable to duty at thirty per cent, under the eighth section of the act of July 14, 1862 (12 Stat. 551), so instructed the jury, and directed a verdict for the plaintiff. Judgment having been rendered thereon, the collector brought the case here.

Mr. Assistant-Attorney-General Smith for the plaintiff in error.

Mr. H. E. Davis, Jr., contra.

MR. JUSTICE HUNT delivered the opinion of the court.

The articles imported by the defendant in error are embraced in the general words of the act of 1864, and, if there were nothing else in the case, would be subject to the duty therein provided.

They are, however, commercially known as "hat braids," used exclusively for enamelling hats and bonnets. These articles are specifically enumerated in the acts of 1861 and 1862, and are there made subject to a different and a lower duty.

By these acts, and by the Revised Statutes, Congress establishes and recognizes the distinction between "cotton braids" and "other manufactures of cotton not otherwise provided for," and "hat braids." 12 Stat. 178; id. 543, 551; Rev. Stat., sect. 2504.

Under the principles laid down in *Arthur* v. *Morrison*, *Arthur* v. *Lahey*, and *Arthur* v. *Unkart* (*supra*, pp. 108, 112, 118), the specific designation should prevail; and the judgment in favor of the plaintiff for the excess of duties paid by him was right, and must be affirmed.

Judgment affirmed.

ARTHUR v. STEPHANI.

1. For tariff purposes, Congress has at all times, since the passage of the act of May 2, 1792 (1 Stat. 259), intended to preserve the distinction between "chocolate" and "confectionery."
2. Chocolate, *eo nomine*, is, by the first section of the act of June 6, 1872 (17 Stat. 231), dutiable at the rate of five cents per pound; and, although put up in a particular form and sold as "confectionery," is not subjected to the duty imposed on the latter article by the first section of the act of June 30, 1864 (13 id. 202).

ERROR to the Circuit Court of the United States for the Southern District of New York.

This was an action by A. Stephani & Co., to recover an

alleged excess of duty paid upon certain chocolate imported by them from Liverpool, in 1873, and upon which the collector of the port of New York, holding it to be "confectionery," exacted a duty of fifty cents per pound *ad valorem*, under the first section of the act of June 30, 1864 (13 Stat. 202). The importers claimed it to be dutiable as "chocolate," under the first section of the act of June 6, 1872 (17 id. 231), which imposes a duty of five cents per pound.

The case was tried by the court below, without the intervention of a jury; and, by an agreed statement of facts, it was admitted that the chocolate was in boxes containing thirty-six little bricks, done up in separate papers, each box weighing about half a pound; and that the chocolate, being such as is ordinarily sold by confectioners as confectionery, and by the box or package, was valued at over thirty cents per pound. It was also admitted that chocolate comes in other forms.

Judgment having been rendered in favor of the plaintiffs, the collector brought the case here.

Mr. Assistant-Attorney-General Smith for the plaintiff in error.

Mr. Edward Hartley, contra.

MR. JUSTICE HUNT delivered the opinion of the court.

The first section of the act of June 30, 1864, imposes "on all confectionery not otherwise provided for, made wholly or in part of sugar, valued at thirty cents per pound or less, a duty of fifteen cents per pound; on all confectionery valued above thirty cents per pound, or when sold by the box, package, or otherwise than by the pound, fifty per cent *ad valorem*." 13 Stat. 202.

The act of June 6, 1872, imposes a duty of five cents per pound "on chocolate." 17 id. 231.

The article in question was chocolate simply, but presented in a form in which it was ordinarily sold as confectionery. Was it dutiable as confectionery, or as chocolate?

The case differs from those already decided, in this, that the last act expressing the legislative will is that which imposes the lower rate of duty. It is like the others, in this, that it presents the question whether the articles are dutiable under general

terms which may embrace them, or under that specific language which can be applied to nothing else. That the latter is the rule by which the duty is fixed is too well settled to require argument. *Reiche* v. *Smythe*, 13 Wall. 162; *Homer* v. *The Collector*, 1 id. 486; *Movius* v. *Arthur*, 95 U. S. 144.

Should it be admitted, therefore, that chocolate is composed in part of the same substances that enter into the composition of ordinary confectionery, it must, nevertheless, stand upon the customs list as the distinct article so often described in the acts of Congress by its specific name.

As early as 1792, chocolate, *eo nomine*, was subjected to a duty of three cents per pound. 1 Stat. 259.

In 1816, the same duty was again imposed upon it. 3 id. 311.

In 1824, a duty of four cents per pound was imposed upon it by name. 4 id. 28.

In the Revised Statutes, it is subject to a duty of five cents per pound. Rev. Stat. p. 478.

Contemporaneously and side by side, all the way down, the statutes provide for different rates of duty on the varieties of sugar and on confectionery, as well as on chocolate. Confectionery and chocolate are uniformly recognized as being different articles for the purpose of duties.

In the first paragraph of sect. 8 of the tariff act of 1842 (5 Stat. 558), sugar of various kinds, comfits, sweetmeats, and confectionery are subject to a duty of twenty-five per cent *ad valorem;* in the second paragraph of the same section, a duty four cents per pound is imposed upon "chocolate."

In the tariff act of 1846 (9 id. 44), "comfits and sweetmeats" are dutiable at forty per cent; "confectionery" of all kinds, at thirty per cent; and "chocolate," at twenty per cent.

In the act of 1861, "comfits and sweetmeats" are placed at thirty per cent; "confectionery of all kinds, not otherwise provided for," at thirty per cent; "chocolate," at twenty per cent. 12 id. 180, 189.

By the act of July, 1870, chocolate is again made dutiable by name (16 id. 262); and again by the act of June, 1872 (17 id. 231).

In the Revised Statutes, "sugar-candy and confectionery" are

provided for, as are "comfits, sweetmeats, and preserved fruits;" and, separately, "chocolate," at a different rate of duty. Rev. Stat. pp. 472, 478.

It is quite evident that Congress has at all times intended to preserve the distinction between these articles, and that the circuit judge decided correctly when he held that chocolate, although in the form and of the character described, was not dutiable as "confectionery" under the act of 1864.

Judgment affirmed.

ARTHUR v. SUSSFIELD.

1. The similitude clause of the act of Aug. 30, 1842 (5 Stat. 565), applies only to non-enumerated articles.
2. In 1872 and 1873, a quantity of spectacles made of glass and steel were imported at New York, upon which the collector of the port, under the third section of the act of June 30, 1864 (13 Stat. 205), exacted a duty of forty-five per cent *ad valorem*. *Held*, that they were dutiable under the ninth section of that act, which imposes "on pebbles for spectacles and all manufactures of glass, or of which glass shall be a component material, not otherwise provided for," a duty of forty per cent *ad valorem*.

ERROR to the Circuit Court of the United States for the Southern District of New York.

In 1872 and 1873, the plaintiffs, Sussfield, Lorsch, & Co., imported, at New York, a quantity of spectacles made of glass and steel.

Arthur, the collector, held them to be subject to a duty of forty-five per cent, under the third section of the act of June 30, 1864, which reads, "On all manufactures of steel, or of which steel shall be a component part, not otherwise provided for, forty-five per cent" (13 Stat. 205), and exacted the duty at that rate.

The importers insisted that the duties were to be chargeable under the ninth section of the same act, which reads, "On pebbles for spectacles and all manufactures of glass, or of which glass shall be a component material, not otherwise provided for, forty per cent." Id. 211.

Having paid the duty under protest, they brought suit to

recover the alleged excess. The court below held the goods to be dutiable under the ninth section of the act of 1864. There was a verdict and judgment for the plaintiffs. The collector then brought the case here.

Mr. Assistant-Attorney-General Smith for the plaintiff in error.

Mr. Edward Hartley, contra.

MR. JUSTICE HUNT delivered the opinion of the court.

The question in this case is as to the proper duty to be imposed.

On the part of the government, it is now insisted that the third and the ninth sections of the act of June 30, 1864, give a partial description of the articles taxed; but that neither is so complete as to exclude the other, and therefore neither description can be applicable: hence it is argued that spectacles must be treated as a non-enumerated article, and that equally resembling two enumerated articles, — to wit, those of which steel is a component and those of which glass is a component, — they must, under the similitude clause of the act of Aug. 30, 1842 (5 Stat. 565), pay the highest rate of duty chargeable on either of the articles they resemble.

We are not able to assent to this course of reasoning. The similitude act applies only to non-enumerated articles. These goods are enumerated. They fall under the description or enumeration of both sections, and if either were absent, the description under the other would be sufficient. Thus, if it were not for that provision of the act describing "manufactures of which steel is a component part," there could be no difficulty in classifying them under that clause which describes "manufactures of which glass shall be a component material;" and if it were not for the provision describing "manufactures of which glass shall be a component material," there could be no difficulty in classifying them under that clause which describes "manufactures of which steel is a component part."

The difficulty, it is said, may be solved in this way: 1st, that in the case of repugnant statutes, the later statute, or, in the case of repugnant provisions of the same statute, the later portion of the act, is deemed to be the last expression of the

legislative will; and, 2d, that when the same article is twice enumerated, the lower rate of duty must prevail. To these points many authorities are cited. Potter's Dwarris on Statutes, pp. 170, 744; *Powers* v. *Barney*, 5 Blatchf. 202; 2 Taunt. 109; 2 B. & Ad. 818; *United States* v. *Johnson*, 17 Wall. 504; *United States* v. *Ulman*, 5 Ben. 553.

Without passing upon this point, we prefer to place our opinion upon the connection in which the different articles are found in the statute. Neither in the general use of language nor in commercial designation would it be understood that the unconnected expression, "of which steel is a component part," was intended to embrace spectacles. Steel may or may not form a part of the spectacles. The article will be as perfect without steel as with it. On the other hand, the terms "pebbles for spectacles and all manufactures of which glass shall be a component material," naturally connects the glass manufacture with the spectacles. There could be no spectacles without them. The colorless crystals in spectacles, termed pebbles, and the manufactures of glass used in spectacles, embrace the same idea; to wit, of pebbles or glass for spectacles. The section, we think, was intended to impose a duty of forty per cent on those substances used in the manufacture of spectacles to aid the sight, and which are therein described as pebbles or as glass. The use of spectacles is to aid the sight. The pebbles and the glass are the materials which effect that purpose. The steel is incidental or auxiliary merely, and Congress intended to embrace spectacles under this appropriate designation.

Judgment affirmed.

MURPHY v. ARNSON.

1. "Nitro-benzole," being a manufacture from benzole and nitric acid, and a non-enumerated article, is subject to duty under the twentieth section, known as the similitude clause, of the act of Aug. 30, 1842 (5 Stat. 565), which provides that "on all articles manufactured from two or more materials the duty shall be assessed at the highest rates at which any of its component parts may be chargeable," and not under the fifth section of the act of July 14, 1862 (12 id. 548), which imposes a duty of fifty per cent *ad valorem* on "essential oils not otherwise provided for."
2. Evidence tending to show that a non-enumerated article "resembles essential oil in the uses to which it is put, as a marketable commodity, more than any thing else," falls short of the requisition of the act of Aug. 30, 1842, *supra*, which provides that "on each and every non-enumerated article which bears a similitude in . . . the use to which it may be applied, to any enumerated article chargeable with duty," there shall be levied, collected, and paid "the same rate of duty which is levied and charged on the enumerated article which it most resembles."

ERROR to the Circuit Court of the United States for the Southern District of New York.

In March, 1871, Arnson & Wilzinski, the plaintiffs below, imported into New York a quantity of nitro-benzole, which is obtained by the chemical action of its constituents — benzole and nitric acid — upon each other. It is then refined and cleaned by distillation, and sold as nitro-benzole and as "oil of myrbane" to druggists, soap manufacturers, "and to the trade generally." The defence introduced testimony that this is a well-known article of commerce, commercially known as oil of myrbane, used for perfuming and flavoring, and also commercially known as "artificial oil of bitter almonds," as well as by its other names; and that, in fact, it resembles essential oil in the uses to which it is put, as a marketable commodity, more than any thing else, and is used as a substitute for an essential oil, being cheaper. Rebutting testimony was put in by the plaintiffs below.

Murphy, the collector, exacted duty upon this nitro-benzole as upon an "essential oil not otherwise provided for," fifty per cent, under the fifth section of the act of July 14, 1862 (12 Stat. 548), whereas the importers contended that it was a non-enumerated article, and that forty cents a gallon was the proper duty, being the highest rate payable on either constituent.

agreeably to the similitude clause of the act of Aug. 30, 1842, sect. 20 (5 Stat. 565).

Upon this evidence the court directed a verdict for the plaintiffs. Judgment having been rendered thereon, the collector brought the case here.

Mr. Assistant-Attorney-General Smith, for the plaintiff in error.

Mr. William Stanley and *Mr. Stephen G. Clarke*, *contra*.

MR. JUSTICE HUNT delivered the opinion of the court.

It was an evident error on the part of the collector to tax "nitro-benzole" as an essential oil. There was no evidence that such was its character; but it appeared at the trial, by uncontradicted evidence, and was in fact conceded, that it was made by mixing benzole and nitric acid; that these substances combined by reason of their chemical affinity, and nitro-benzole was the result. Not being enumerated as a dutiable article, it falls under the twentieth section of the act of Aug. 30, 1842 (5 Stat. 565), called the similitude clause.

"And be it further enacted, that there shall be levied, collected, and paid, on each and every non-enumerated article which bears a similitude, either in material, quality, texture, or the use to which it may be applied, to any enumerated article chargeable with duty, the same rate of duty which is levied and charged on the enumerated article which it most resembles in any of the particulars before mentioned; and if any non-enumerated article equally resembles two or more enumerated articles on which different rates of duty are chargeable, there shall be levied, collected, and paid on such non-enumerated article the same rate of duty as is chargeable on the article which it resembles paying the highest duty; and on all articles manufactured from two or more materials the duty shall be assessed at the highest rates at which any of its component parts may be chargeable."

The government now contends that the duty assessed by the collector was the proper one, for the reason that nitro-benzole resembles essential oil in the use to which it is applied, and should be subject to the same duty with that article; to wit, fifty per cent. There is no pretence that it resembled essential oil in material quality or texture. Although made of two fluids, there is no evidence that the compound resulting bore any

similitude in material quality or texture to either of its original elements, nor is there any thing in the nature of the subject to require us to believe that such was the fact.

The evidence of the use to which it might be applied scarcely warrants us in holding that there was a similitude in that respect. The case states that the defendant gave evidence tending to show that the article "resembles essential oil in the uses to which it is put, as a marketable commodity, more than any thing else." This is all that was shown to make applicable the clause in questi..n, and we think it falls short of the requisition of the statute, that it must "bear a. similitude in the use to which it may be applied." It may resemble an essential oil in this respect more than any thing else, and yet bear no resemblance. It does not follow because it resembles nothing else that it resembles essential oil; or because it cannot be applied to any other use, that it may be applied to the use to which essential oil is applied.

Again, it may be doubted whether proof that "the use to which it may be put as a marketable commodity" resembles essential oil meets the meaning of the provision, "bears a similitude in the use to which it may be applied." The former carries the idea of its adaptability to sale as a substitute for essential oil, while the statute plainly refers to its employment, or its effect in producing results.

But the compound falls plainly within the words of the last clause of the act we have cited; to wit, "and on all articles manufactured from two or more materials the duty shall be assessed at the highest rates at which any of its component parts may be chargeable."

We see no more reason to doubt that nitro-benzole is a manufacture of or from benzole and nitric acid, than that glass is a manufacture from sand and fixed alkalies. This is in harmony with the decision in *Meyer et al.* v. *Arthur* (91 U. S. 570), where it was held that the expression, "manufactures of metals of which either of them is the component part of chief value," did not embrace a case where the metals had lost their form and character as metals, and become the chemical ingredients of new forms. White lead, nitrate of lead, oxide of zinc, and dry and orange mineral, were held not to be manufactures of metals

within the words of the statute. Mr. Justice Bradley says: "When the act speaks of 'manufactures of metals,' it obviously refers to manufactured articles in which metals form a component part. When we speak of manufactures of wood, of leather, or of iron, we refer to articles that have those substances especially for their component parts, and not to articles in which they have lost their form entirely, and have become the chemical ingredients of new forms. The qualification which is added to the phrase 'manufactures of metals'—namely, 'manufactures of metals of which either of them' (that is, either of the *metals*) 'is the component part of chief value'—corroborates this view."

In the present case, the original elements are fluids, and the manipulation and the materials blending with each form a union, which is as much a manufacture within the meaning of the statute as where the materials are mechanically joined together. Bouvier thus defines the word "manufacture:"—

"The word is used in the English and American patent laws. It includes machinery which is to be used and is not the object of sale, and substances (such, for example, as medicines) formed by chemical processes when the vendible substance is the thing produced, and that which operates preserves no permanent form." "It includes any new combination of old materials constituting a new result or production, in the form of a vendible article, not being machinery. The contriver of a new commodity which is not properly a machine or a composition of matter can obtain a patent therefor as for a new manufacture. And, although it might properly be regarded as a machine or a composition of matter, yet if the claim to novelty rests on neither of these grounds, and if it constitutes an essentially new merchantable commodity, it may be patented as a new manufacture."

The various nostrums vended all over the land, with or without the certificate of the Patent Office, are manufactures. Beer may well be said to be manufactured from malt and other ingredients, whiskey from corn, or cider from apples. The fact that the identity of the original article or articles is lost, and that a new form or a new character is assumed, is not material in determining whether, within the popular idea, as embodied in the customs act, the article in question is a manufacture from its original elements.

We have no doubt that nitro-benzole is a manufacture from benzole and nitric acid, falling within the twentieth section of the act of 1842, and that the duty was rightly fixed by the court below.

Judgment affirmed.

ARTHUR v. DAVIES.

1. The duty on braces and suspenders is, *eo nomine*, fixed by the twenty-second section of the act of March 2, 1861 (12 Stat. 191), and the thirteenth section of the act of July 14, 1862 (id. 556).
2. Merchandise technically and commercially known as braces and suspenders is subject to the duty imposed upon them, although it would otherwise fall under the general designation applicable to other articles.

ERROR to the Circuit Court of the United States for the Southern District of New York.

In 1873, Davies & Co. imported into the port of New York certain merchandise, on which the collector imposed and collected a duty of fifty per cent, under the eighth section of the act of July 14, 1862. 12 Stat. 552. The importers insisted that they were liable only to a duty of thirty-five per cent, under the twenty-second section of the act of March 2, 1861 (id. 191), and the thirteenth section of the act of July 14, 1862 (id. 556).

A reduction, under the act of June 6, 1872 (17 id. 231), was allowed.

It was admitted at the trial of the suit brought by Davies & Co. against the collector that the goods were, —

1. Suspenders or braces manufactured of rubber, cotton, and silk; cotton being the component material of chief value.

2. Suspenders or braces manufactured of rubber, cotton, and silk; cotton being the component material of chief value, and the silk, being a few threads, only used for purposes of ornamentation.

It also appeared that they were commercially known as suspenders or braces, and that these terms are synonymous.

Judgment having been rendered for the plaintiffs, the collector sued out this writ of error

The Solicitor-General for the plaintiff in error
Mr. Edward Hartley, contra.

MR. JUSTICE HUNT delivered the opinion of the court.

The twenty-second section of the act of March 2, 1861 (12 Stat. 191), imposed a duty of thirty per cent on "braces, suspenders, webbing, or other fabrics, composed wholly or in part of india-rubber, not otherwise provided for."

The eighth section of the act of July 14, 1862 (id. 552), imposes the following duty: "On manufactures of india-rubber and silk, or of india-rubber and silk and other materials, fifty per cent *ad valorem*."

The thirteenth section imposes: "In addition to the duties heretofore imposed by law on braces, suspenders, webbing, or other fabrics, composed wholly or in part of india-rubber, not otherwise provided for, five per cent *ad valorem*." Id. 555, 556.

In Schedule C of the act of July 30, 1846 (9 id. 44), the same provision is made, in these words: "Thirty per cent *ad valorem* on braces, suspenders, webbing, or other fabrics, composed wholly or in part of india-rubber, not otherwise provided for."

The same designation and the same duty are found in the seventh subdivision of sect. 5 of the act of Aug. 30, 1842, where they do not exceed two dollars per dozen in value. 5 id. 555.

It thus appears that for thirty years prior to this importation, and in four different statutes, braces and suspenders, composed wholly or in part of india-rubber, had been a subject of duty, *eo nomine;* and in the same statute where a duty of fifty per cent is imposed on other manufactures of which rubber is a component material, which it is now sought to apply to braces and suspenders, braces and suspenders containing that material are, by name, charged with an additional duty of five per cent.

It is not material that in one kind of suspenders cotton was the component of chief value, and that each contained some proportion of silk. If they are technically and commercially braces and suspenders composed in part of india-rubber, they take their dutiable character from that source, and not from

the fact that they would otherwise fall under the general designation applicable to other subjects.

Under the principles of the cases already decided, it is clear that excessive duties were exacted, and that the rulings of the judge on the trial were correct.

Judgment affirmed.

ARTHUR v. HOMER.

1. The duty imposed on embroidered linen goods by the twenty-second section of the act of March 2, 1861 (12 Stat. 192), is not reconsidered in the seventh section of the act of June 30, 1864 (13 id. 209), but remains as fixed by the former act.
2. A statute does not, by implication, repeal a prior one, unless there is such a positive repugnancy between them that they cannot stand together.

ERROR to the Circuit Court of the United States for the Southern District of New York.

In 1873, Homer & Co. imported into the port of New York certain goods, of which linen was the basis, upon which the collector imposed and collected duties at the rate of forty per cent, under the seventh section of the act of June 30, 1864 (13 Stat. 209). The importers insisted that they were dutiable at thirty-five per cent only, under the twenty-second section of the act of March 2, 1861 (12 id. 192), and brought this action to recover the alleged excess of duties.

The plaintiffs introduced testimony tending to show that the goods were dress patterns, or patterns for dresses, designed for ladies' wear, each piece, or the contents of each carton, comprising the material for a garment, either as an overskirt (*polonaise*) or dress (*robe a jour*), although not made up. The size of these patterns or articles varied from about eight to twelve yards. About the edge, or above it, and arranged so as to form an appropriate ornamentation to the article when made up for wear, there was worked, sometimes in cotton thread and sometimes in linen thread, more or less embroidery. The amount of this embroidery and its elaboration was a substantial and influential element in the cost or value of the article.

The component material of chief value in the articles in

question was flax or linen, as embroidered; and in the condition in which they were imported,—packed in cartons and boxes,—the value of the goods exceeded thirty cents per square yard.

The testimony further showed that the general descriptive and commercial names of the articles in question were polonaise and robe, more particularly described as linen embroidered robes and linen embroidered polonaise, &c.

The court below directed the jury to find a verdict for the plaintiffs; and from the judgment entered upon such verdict this writ of error is brought.

The Solicitor-General for the plaintiff in error.
Mr. Edward Hartley, contra.

MR. JUSTICE HUNT delivered the opinion of the court.

Sect. 14 of the act of March 2, 1861 (12 Stat. 185, 186), imposes duties in the following words, viz.:—

"On all brown or bleached linens, ducks, canvas, paddings, cotbottoms, burlaps, drills, coatings, brown hollands, blay linens, damasks, diapers, crash, huckabacks, handkerchiefs, lawns, or other manufactures of flax, jute, or hemp, or of which flax, jute, or hemp shall be the component material of chief value, being of the value of thirty cents and under per square yard, twenty-five per cent *ad valorem;* valued above thirty cents per square yard, thirty per cent *ad valorem;* on flax or linen threads, twine, and pack-thread, and all other manufactures of flax or of which flax shall be the component material of chief value, and not otherwise provided for, thirty per cent *ad valorem.*"

The twenty-second section (12 Stat. 192) imposes a duty of thirty per cent on "manufactures of cotton, linen, silk, wool, or worsted, if embroidered or tamboured in the loom, or otherwise, by machinery or with the needle, or other process not otherwise provided for."

The tenth and thirteenth sections of the act of July 14, 1862 (12 Stat. 554–557), impose five per cent additional duty on each of the above enumerations *totidem verbis.*

The seventh section of the act of June 30, 1864 (13 Stat. 209), imposes duties as follows:—

"On brown and bleached linens, ducks, canvas, paddings, cotton bottoms, burlaps, diapers, crash, huckabacks, handkerchiefs, lawns,

or other manufactures of flax, jute, or hemp, or of which flax, jute, or hemp shall be the component material of chief value, not otherwise provided for, valued at thirty cents or less per square yard, thirty-five per cent *ad valorem;* valued at above thirty cents per square yard, forty per cent *ad valorem. On flax or linen yarns for carpets, not exceeding number eight Lea, and valued at twenty-four cents or less per pound, thirty per cent ad valorem. On flax or linen yarns valued at above twenty-four cents per pound, thirty-five per cent ad valorem.* On flax or linen thread, twine, and pack-thread, and all other manufactures of flax, or of which flax shall be the component material of chief value, not otherwise provided for, forty per cent *ad valorem.*"

The twenty-second section was as follows (id. 216): —

"*And provided further*, that the duties upon all goods, wares, and merchandise imported from foreign countries, not provided for in this act, shall be and remain as they were according to existing laws prior to the 29th of April, 1864."

It will be seen by this juxtaposition, that sect. 14 of the act of 1861, and sect. 7 of the act of 1864, are, in their first and general paragraphs, nearly identical. Except as to that portion of the act of 1864, describing linen yarns, which is placed above in Italics, and the rate of the duty provided, they are nearly the same, word for word. In the paragraphs following they differ. The act of 1861 contains the provision that "manufactures of cotton, linen, silk, wool, or worsted, if embroidered or tamboured, in the loom or otherwise, by machinery or with the needle, or other process not otherwise provided for," shall be subject to a duty of thirty per cent.

The act of 1864 omits this provision, but contains the following clause: —

"*Provided further*, that the duties upon all goods, wares, and merchandise imported from foreign countries, not provided for in this act, shall be and remain as they were according to existing laws prior to the 29th of April, 1864."

It seems impossible to resist the conclusion that Congress intended by the act of 1864 to revise the duties on brown and bleached linens generally, increasing them from twenty-five and thirty per cent, as they were by the act of 1861, to thirty-

five and forty per cent, but on embroidered or tamboured manufactures of linen the duties were intended to remain as they were prior to the 29th of April, 1864.

To induce a repeal of a statute by the implication of inconsistency with a later statute, there must be such a positive repugnancy between the two statutes that they cannot stand together. *McCool* v. *Smith*, 1 Black, 459; *Wood* v. *United States*, 16 Pet. 342; *United States* v. *Tynen*, 11 Wall. 88.

In the present case, the statutes are in perfect harmony, and there is no room for the theory of repeal by implication.

The test of the rate of duty we are considering is that of embroidery, or not. The rate of duty upon plain linen goods is reconsidered in the act of 1864, and is fixed at thirty-five per cent where the goods are valued at thirty cents or less per square yard, and at forty per cent where they are valued above that sum. This is a higher rate of duty than that imposed by the act of 1861; and, if there were no repealing clauses, then it would necessarily operate as a repeal of the old duty, by its repugnancy. The rate of duty on embroidered goods is not reconsidered in the act of 1864. This class of goods is not there mentioned, but falls under the description of goods "not provided for in this act," which, it is declared, shall remain as they were on the 29th of April, 1864. They remain, therefore, subject to the duty imposed by the act of March, 1861.

That this is a correct interpretation of these statutes is shown by the later provision of the Revised Statutes of 1874, wherein the duties are set forth in precise accordance with the construction we have here given.

1st, At pp. 465, 466, a duty is imposed on brown and bleached linens, ducks, canvas, &c., of thirty-five per cent where the value does not exceed thirty cents per square yard, and of forty per cent where the value is greater.

2d, Flax or linen yarns for carpets are dutiable at thirty-five or forty per cent, according to their value. These duties are as provided in the act of 1864, and the marginal reference is to that act.

3d, At p. 479 is the provision, "Embroidery, manufactures of cotton, linen, or silk, if embroidered or tamboured, in the

loom or otherwise, by machinery or with the needle, or other process not otherwise provided for, thirty-five per cent *ad valorem*. Articles embroidered with gold or silver or other metals, thirty-five per cent *ad valorem*."

The rulings at the trial were all upon this theory of the laws imposing duties, and were correct.

Judgment affirmed

ARTHUR v. HERMAN.

In 1872, A. imported certain goods manufactured of cattle hair and cotton, the latter not being the component part of chief value. *Held*, that, under the last paragraph of the sixth section of the act of June 30, 1864 (13 Stat. 209), they were subject to a duty of thirty-five per cent *ad valorem*.

ERROR to the Circuit Court of the United States for the Southern District of New York.

In the year 1872, Herman & Co., the plaintiffs, imported from England certain cheap goods, the warp of which was made of cotton, and the filling or woof of cattle hair. These were the only component parts of the goods.

The collector imposed a duty of thirty-five per cent on the goods, under the act of June 30, 1864. The importers protested against this charge as excessive, insisting that, under the second section of the act of June 6, 1872 (17 Stat. 231), but ninety per cent of thirty-five per cent could be legally exacted as the duty. Judgment was rendered in favor of the plaintiffs, and the defendant brought the case here.

The Solicitor-General for the plaintiff in error.

Mr. Stephen G. Clarke, contra.

MR. JUSTICE HUNT delivered the opinion of the court.

The last paragraph of sect. 6 of the act of 1864 is as follows, viz.: "On cotton braids, insertings, lace trimming, or bobbinet, and all other manufactures of cotton not otherwise provided for, thirty-five per cent *ad valorem*."

The goods in question were manufactured from two materials, of which cotton was one, and may, therefore, in general terms,

be said to be manufactured of cotton, and they are not provided for by any specific enumeration in the act of 1864. They fall under the general clause of this act, just quoted.

Impliedly admitting the application of this provision to their goods, the importers, by their protest, insist "that the merchandise aforesaid is only liable under existing laws to a duty of ninety per cent of thirty-five per cent *ad valorem*, under the second section of the act of June 6, 1872, as being merchandise composed of animal hair and cotton."

On turning to the act of 1872, we find that the ninety per cent provision is made applicable to "all manufactures of cotton, of which cotton is the component part of chief value." The article in question is dutiable as a manufacture of cotton, that material being one of its components. But the record expressly states that cotton is not the component part of chief value. It is plain that this case does not fall within the terms of the clause.

The argument of the importers, if we appreciate it, is this: The similitude clause of the act of Aug. 30, 1842 (5 Stat. 565, sect. 20), provides that there shall be collected on every non-enumerated article, . . . manufactured from two or more materials, the highest duty assessable upon any of its component parts. The article in question is manufactured from cow hair and cotton; of these the cotton is assessed at a higher rate of duty than the hair, and, therefore, the article is assessed as a manufacture of cotton, and hence it is insisted, under the act of 1872, as a manufacture of cotton it is entitled to the deduction claimed.

The defect in this argument is apparent. The article in question does not fall within the terms of either part of the clause of the act of 1872, "all manufactures of cotton, of which cotton is the component part of chief value." The first part gives the deduction to manufactures of cotton, which might be understood to mean those which are wholly of cotton. If it also includes a manufacture of which cotton is one of the components only, the cotton must be the component of chief value. It certainly was not intended to embrace a composite article of which cotton was the chief component, and a composite article of which it was not the chief

component. In any aspect, it does not embrace the goods in question.

We think the judge erred in ruling in favor of the importer, and that there must be a new trial.

Judgment reversed and new trial ordered.

ARTHUR v. RHEIMS.

1. The rule that an article, dutiable by its specific designation, will not be affected by the general words of the same or another statute, which would otherwise embrace it, applies as well to statutes reducing duties as to those increasing them.
2. As the twelfth section of the act of June 30, 1864 (13 Stat. 213), imposes a duty of fifty per cent *ad valorem* upon artificial flowers *eo nomine*, they are not subject to the deduction of ten per cent allowed by the second section of the act of June 6, 1872 (17 id. 231), "on all manufactures of cotton of which cotton is the component part of chief value."

ERROR to the Circuit Court of the United States for the Southern District of New York.

In 1874, Rheims, the plaintiff below, imported into the port of New York a quantity of artificial flowers, composed of iron, paper, wire, and cotton, and on which Arthur, the collector, imposed, under the twelfth section of the act of June 30, 1864 (13 Stat. 213), a duty of fifty per cent *ad valorem*.

Rheims claimed that, under the second section of the act of June 6, 1872 (17 Stat. 231), the merchandise was liable only to ninety per cent of the duty imposed by the act of June 30, 1864; but having, under protest, paid the duty imposed by the collector, brought this suit to recover the excess.

Under the instructions of the court below, the jury found that the importer was entitled to the deduction. From the judgment rendered upon the verdict, this writ of error is brought.

Mr. Assistant-Attorney-General Smith for the plaintiff in error.
Mr. Stephen G. Clarke, contra.

MR. JUSTICE HUNT delivered the opinion of the court.

The question for decision in this case is, whether the defend-

ant in error is entitled to the deduction of ten per cent allowed by the act of June 6, 1872.

Under the act of 1864, the duty of fifty per cent was imposed on "artificial and ornamental feathers and flowers, or parts thereof, of whatever material composed, not otherwise provided for, beads and bead ornaments." 13 Stat. 213. As no other provision was made, the goods were presumably subject to this duty.

The act of June 6, 1872 (17 id. 231), provides, in its second section, as follows: —

"That on and after the 1st of August, 1872, in lieu of the duties imposed by law on the articles in this section enumerated, there shall be levied, collected, and paid on the goods, wares, and merchandise in this section enumerated and provided for, imported from foreign countries, ninety per cent of the several duties and rates of duties now imposed by law on said articles severally, it being the intent of this section to reduce existing duties on such articles ten per cent of such duties; that is to say, on all manufactures of cotton of which cotton is the component part of chief value; . . . on all iron and steel, and all manufactures of iron and steel of which such metals, or either of them, shall be the component part of chief value, excepting cotton machinery."

Many other articles are named.

The general words of the act of 1872, no doubt, are sufficiently comprehensive to embrace the case before us. Artificial flowers are a manufacture of which cotton is the chief component, and, were that all, would be entitled to the deduction asked for.

But it is true, also, that they are dutiable under the law of 1864, not as a manufacture of cotton, but specifically, *eo nomine*, as artificial flowers. It has been held in many cases, — as that of "almonds and dried fruits," the "canary birds," and at the present term, in the case of "thread laces" and of "chocolate," — that, when an article is intended to be made dutiable by its specific designation, it will not be affected by the general words of the same or another statute, which would otherwise embrace it.

This rule applies both to statutes reducing and to statutes increasing duties. Giving it such application here, we must hold that "artificial flowers" are not entitled to be classed as

a manufacture of cotton which is entitled to the reduction provided for by act of 1872.

The ruling in this respect was erroneous, and the judgment must be reversed; and it is

So ordered

ARTHUR v. GODDARD.

The plaintiffs below entered an importation of goods upon the following invoice: —

Bought	Fr's	8,670.25
Discount for cash on gross amount, two per cent, 8,766.60		175.30
	Fr's	8,494.95

Terms cash. If not paid, interest to be added at the rate of six per cent.

As cash had not been paid, the two per cent discount was disallowed by the appraisers. The collector thereupon fixed the value of the goods as of the invoice price at 8,670.25 francs, and exacted duty thereon, although the actual market value of the goods in the country of exportation was 8,494.95 francs. *Held*, that the latter sum was also the invoice value, and that the duty on the two per cent was improperly exacted.

ERROR to the Circuit Court of the United States for the Southern District of New York.

In 1874, Goddard & Brother imported certain goods, of which the invoice, after giving the details of weight, &c., was as follows, viz.: —

Bought	Fr's	8,670.25
Discount for cash on gross amount, two per cent, 8,766.60		175.30
	Fr's	8,494.95

Terms cash. If not paid, interest to be added at the rate of six per cent.

The importers entered the goods at the net price stated in the invoice, — francs, 8,494.95, — and declared on the entry as follows: "Cash not paid on these goods, but are passed to our account, and are subject to interest at six per cent per annum."

The case finds, as matter of fact, that 8,494.95 francs was the actual market value of the goods at the time of their exportation, in the principal market of the country from which they

were exported, and that the purchase by the importers was at the figures named.

The appraisers disallowed the discount of two per cent, on the ground that the importers stated in the entry that the cash was not paid. The collector thereupon fixed the value of the goods at 8,670.25 francs; and the duty charged upon that valuation having been paid under protest, the importers brought suit to recover the excess.

Judgment was rendered in their favor, and the collector brought the case here.

Mr. Assistant-Attorney-General Smith for the plaintiff in error.

Mr. William G. Choate, contra.

MR. JUSTICE HUNT delivered the opinion of the court.

The appraisers seem to have acted under the provision of the seventh section of the act of March 3, 1865 (13 Stat. 494), which declares "that the duty shall not be assessed upon any amount less than the invoice or entered value."

The actual value has been stated at 8,494.95 francs, and such was also the "invoice value." The entered or invoiced value spoken of in the statute means the value as it is stated in or upon the invoice. That value was, francs, 8,494.95. The value means the cash value. The price at thirty days' credit might be different, and the difference would probably be greatly increased by a credit of six months or a year, but the value or cost would still be the same. The difference would be chargeable to the credit, and not to a difference in the value of the goods. That the price was to bear interest at six per cent until paid for, or at sixty per cent, had no influence upon the question of their value. We think it quite clear that the net price is stated in this invoice to be the value of the goods; viz., francs, 8,494.95.

Ballard et al. v. *Thomas* (19 How. 382), is cited as an authority to the contrary. We do not so consider it. The judge at the trial of that case charged the jury as follows: "It being admitted that the duties were levied on the prices at which the iron was charged in the invoice, they are lawfully exacted; . . . that the entry in the invoice, that the plaintiff would be enti-

tled to a deduction for prompt payment, could not affect the amount of duty chargeable."

In delivering the opinion of affirmance in this court, Mr. Justice Nelson said: "In respect to the deduction from the price on account of prompt payment, we think the fact does not vary or affect the price of the article as stated in the invoice. It relates simply to the mode of payment, which may, if observed, operate as a satisfaction of the price to be paid, by the acceptance of a less sum." This is quite different from a case where the court is asked to fix the duties upon a different value from that stated in the invoice.

It is said, again, that the valuation of the appraisers is conclusive.

The statute already cited provides that it shall be the duty of the collector to cause the actual market value or wholesale price of the goods in the principal market of the country from which they are exported to be appraised, "and such appraised value shall be considered the value upon which the duty shall be assessed." 13 Stat. 493.

In this case, the appraisers did not profess to appraise or ascertain the market value of the goods. They simply gave a construction to the invoice; they decided its legal effect to be that 8,670.25 francs is there declared to be the market value of the goods. They held as a legal proposition, that, in fixing the value, the discount of two per cent should not be allowed; and, as a result from this, that 8,670.25 francs, and not 8,494.95 francs, was the value.

Such is the effect of their return; and the view is strengthened, if strength is needed, by the statement of the case, that 8,494.95 francs was, in fact, the market value of the goods.

Judgment affirmed

DAVIES v. ARTHUR.

An importer, having set forth in his written protest the ground of his objection to the payment of customs duties exacted by the collector, cannot, in his suit against the latter, recover them upon any ground other than that so set forth.

ERROR to the Circuit Court of the United States for the Southern District of New York.

This is an action by John M. Davies & Co. to recover certain duties claimed by them to have been illegally exacted by Arthur, the defendant, as collector of the port of New York.

In April, 1872, they imported from Liverpool certain merchandise, a portion of which is described on the invoice as "Ducape Eglington ties," which are manufactured of silk, and used and known as neckties. Another portion of the merchandise is described as "twill silk cut up." The appraiser, in his report to the collector, returned the ties as silk scarfs, and the twill silk as silk in pieces; whereupon the collector imposed a duty of sixty per cent *ad valorem* upon each.

The importers thereupon protested in writing against the assessment, upon the ground that the merchandise "should only pay duty, being articles worn by 'men, women, or children,' &c., and 'wearing-apparel,' under sect. 22, act of March 2, 1861, and sect. 13, act of July 14, 1862, at thirty-five per cent *ad valorem*. "They are neither 'scarfs' nor ready-made clothing in fact, nor as known in trade and commerce."

On the same day, they appealed to the Secretary of the Treasury, who affirmed the action of the collector, and they thereupon brought this suit.

It having been admitted by both parties at the trial that the goods were, under the concluding clause of the eighth section of the act of June 30, 1864 (13 Stat. 210), subject to a duty of fifty per cent *ad valorem*, as manufactures of silk not otherwise provided for, the question submitted to the court, which tried the case without a jury, was whether, under their protest, the plaintiffs could recover the difference between the amount of duties payable on said "Ducape Eglington ties," at the rate of fifty per

cent *ad valorem*, and the amount claimed and exacted by the defendant on the same, at the rate of sixty per cent *ad valorem*.

There was a judgment for the defendant, whereupon the plaintiffs brought the case here.

Mr. Edward Hartley for the plaintiffs in error.

The Solicitor-General, contra.

MR. JUSTICE CLIFFORD delivered the opinion of the court.

Importers who have paid duties under protest in writing may, if the duties were illegally exacted and the protest sets forth, distinctly and specifically, the grounds of the objection to the payment, maintain an action of assumpsit against the collector to recover back the amount so paid. 5 Stat. 727.

Persons importing merchandise are required to make their protests distinct and specific, in order to apprise the collector of the nature of the objection, before it is too late to remove it, or to modify the exaction, and that the proper officers of the treasury may know what they have to meet, in case they decide to exact the duties as estimated, notwithstanding the objection, and to expose the United States to the risk of litigation. *Curtis's Administratrix* v. *Fiedler*, 2 Black, 461.

Payment of the duties having been made under protest in writing, the importers brought assumpsit against the collector to recover back the amount which they allege was illegally exacted. Service was made; and both parties appeared, and, having waived a trial by jury, submitted the case to the court upon an agreed statement of facts. Hearing was had; and the court rendered judgment in favor of the defendant, and the plaintiffs sued out the present writ of error.

Goods were imported by the plaintiffs from Liverpool into the port of New York, a portion of which were described in the invoice as Ducape Eglington ties, which are manufactures of silk, and are used and known as neckties, and were valued in the invoice at a net valuation equivalent to $696 in gold coin. Another portion of the merchandise is described in the invoice as twill silk cut up, and is valued in the invoice at a net valuation equivalent to $234.13, gold. Both parcels were part of the merchandise described in the invoice as the contents of a case marked and numbered; and the statement is, that they were

entered for consumption by the plaintiffs under the dutiable rate of sixty per cent *ad valorem*, other portions of the merchandise being placed in the entry respectively under the duti able rates of thirty, thirty-five, and fifty per cent *ad valorem*.

Sufficient appears to indicate that the goods were appraised as the agreed statement shows; that the local appraiser reported the neckties to the collector as silk scarfs, and the twill silk cut up as silk in pieces, and that both were subject to duty at the rate of sixty per cent *ad valorem*. Pursuant to that report, the collector liquidated the duties at that rate; and the plaintiffs paid that rate of duty on the neckties and the silk cut up, on the entered valuation of the same, as before explained. Custom duties are payable in gold; and the plaintiffs paid the amounts in that medium, and under protest in writing.

Subsequent to the passage of the act of the 3d of March, 1839, and before the passage of the act of the 26th of February, 1845, such a suit against a collector to recover back duties as having been illegally exacted could not be maintained, unless it was brought before the collector placed the money to the credit of the Treasurer of the United States. 4 Stat. 348; *Cary* v. *Curtis*, 3 How. 236.

Hardship and injustice resulted from that rule of decision; and the Congress, by the later act, established a different rule, and provided to the effect that the importer may in such a case have such a remedy against the collector to recover back such duties, if he protested in writing at or before the payment of the duties, and set forth distinctly and specifically the grounds of his objections to the payment of the same. 5 Stat. 727.

Different forms of expression are employed in later enactments, but all which are applicable to the case before the court are, except as to time, substantially to the same effect. 13 id. 214, sect. 14.

What is required by that act in respect to the matter in question is that the importer, if dissatisfied with the decision of the collector, shall give notice in writing to him on each entry, setting forth therein, distinctly and specifically, the grounds of his objection thereto; which, certainly, is not different from what is required by the antecedent act. Nor is there any substantial difference in the construction given by

the courts to the provision which contains that requirement. Instead of that, both acts referred to make it necessary that the protest shall be in writing; and the requirement is that the importer shall set forth, distinctly and specifically, the grounds of his objections to the payment of the liquidated duty.

Unless the protest is made in writing, and is signed by the claimant within ten days after the ascertainment and liquidation of the duties, setting forth distinctly and specifically the grounds of objection to the payment, no action of the kind against the collector can be maintained to recover back the duties as having been illegally exacted. Nor is it sufficient to object to the payment of any particular duty or amount of duty, and to protest in writing against it; but the claimant must do more, as is evident from the words of the act of Congress. He must set forth in his protest the grounds upon which he objects, distinctly and specifically, the reason being, as ruled by Chief Justice Taney, that the words of the act requiring the protest are too emphatic to be overlooked in the construction of the provision. *Mason* v. *Kane*, Taney's Dec. 177.

Mistakes and oversights will sometimes lead to irregular assessment, and the object of the requirement is to prevent a party, if he suffers the mistake or oversight to pass without notice, from taking advantage of it when it is too late to make the correction, and to compel him to disclose the grounds of his objection at the time when he makes his protest.

Protests of the kind must contain a distinct and clear specification of each substantive ground of objection to the payment of the duties. Technical precision is not required; but the objections must be so distinct and specific, as, when fairly construed, to show that the objection taken at the trial was at the time in the mind of the importer, and that it was sufficient to notify the collector of its true nature and character, to the end that he might ascertain the precise facts, and have an opportunity to correct the mistake and cure the defect, if it was one which could be obviated. *Burgess* v. *Converse*, 2 Curt. 223.

Two objects, says Judge Curtis, were intended to be accomplished by the provision in the act of Congress requiring such a protest: 1. To apprise the collector of the objections entertained by the importer, before it should be too late to remove

them, if capable of being removed. 2. To hold the importer to the objections which he then contemplated, and on which he really acted, and prevent him, or others in his behalf, from seeking out defects in the proceedings, after the business should be closed, by the payment of the money into the treasury. *Warren* v. *Peaselee*, 2 Curt. 235; *Thomson* v. *Maxwell*, 2 Blatchf. 392.

Merchandise entered as silk ties was imported by the plaintiffs into the port of New York, on which the defendant exacted an *ad valorem* duty of sixty per cent, upon the assumption that the articles were properly classified as silk scarfs. 13 Stat. 210.

Prompt objection to that classification was made by the plaintiffs; and they protested against the payment of the liquidated duty, on the ground that the goods imported and entered should be classified as "articles of wearing-apparel worn by men, women, and children," and that they were subject only to a duty of thirty-five per cent *ad valorem*, as prescribed by two prior tariff acts. 12 id. 186, 556.

Properly construed, their protest is that the articles should only pay duty at thirty-five per cent *ad valorem*, because the articles imported were wearing-apparel worn by men, women, and children, and were not scarfs, nor ready-made clothing in fact, nor as known in trade or commerce.

Litigation ensued in consequence of that difference of opinion between the importers and the officers of the government; but, when the case came to trial, both parties agreed that the merchandise imported should have been classified as a manufacture of silk not otherwise provided for, under the concluding clause of sect. 8 in the act of the 30th of June, 1864, and that it was dutiable at fifty per cent *ad valorem*, differing from the theory of each party as assumed at the time of the appraisement and liquidation of the duties. 13 id. 210. Still, the plaintiffs claimed to recover the difference of ten per cent between the proper duty and the duty exacted by the defendant as collector; and the court below held that they could not do so under their protest, as they could only be heard to allege the objections distinctly and specifically stated in their protest, pursuant to the requirement contained in the act of Congress. Judgment was given for the defendant; and the plaintiffs sued out the present writ of error, to correct the ruling of the Circuit Court.

Three points were ruled by the Circuit Court: 1. That, unless the protest set forth distinctly and specifically the ground of the objection to the amount claimed, it fails to meet the requirement of the act of Congress. 2. That the office of the protest is to point out to the officers of the customs the precise errors of fact or of law which render the exaction of the duty unauthorized. 3. That the plaintiffs are precluded from insisting that their importation was a manufacture of silk not otherwise provided for, and subject to a duty of fifty per cent instead of sixty, when, by their protest, they allege it to be wearing-apparel, &c., subject to a duty of thirty-five per cent.

Satisfactory reasons in support of these conclusions are given by the circuit judge, to which it will be sufficient to refer, without repetition. *Davies* v. *Arthur*, 13 Blatchf. 34; *Norcross* v. *Greeley*, 1 Curt. 120.

Apply these principles to the case before the court, and it is clear that there is no error in the record.

Judgment affirmed.

KOHLSAAT v. MURPHY.

1. The joint resolution of March 2, 1867 (14 Stat. 571), repealing that portion of the fifth section of the act approved June 30, 1864 (13 id. 208), which subjected to a duty of ten per cent *ad valorem* "lastings, mohair cloth, silk, twist, or other manufacture of cloth, woven or made in patterns of such size, shape, and form, or cut in such manner, as to be fit for shoes, slippers, boots, bootees, gaiters, and buttons exclusively, not combined with india-rubber," did not revive the provision in the twenty-third section of the act of March 2, 1861 (12 id. 195), which placed such articles on the free list.
2. Patterns imported in 1870, made of cotton canvas cut into strips of the size and shape for slippers, more or less embroidered with worsted and silk, were dutiable under the last paragraph of the sixth section of the act of June 30, 1864 (13 Stat. 209), which imposes a duty of thirty-five per cent *ad valorem* on "manufactures of cotton not otherwise provided for."

ERROR to the Circuit Court of the United States for the Southern District of New York.

The facts are stated in the opinion of the court.

Mr. Freeman J. Fithian for the plaintiffs in error.

The Solicitor-General, contra.

MR. JUSTICE CLIFFORD delivered the opinion of the court.

Repeal by implication of revenue and collection laws, except when the prior laws have been subjected to a general statutory revision, are not favored in legal decision, unless it appear that the prior provision has been re-enacted in the new regulation, or that the later act is repugnant to the former; and the Revised Statutes provide in express terms that, whenever an act is repealed which repealed a former act, such former act shall not thereby be revived unless it shall be expressly so provided. Rev. Stat., sect. 12, p. 2.

Six invoices of merchandise were imported into the port of New York, designated as embroidered slipper-patterns, being the ordinary slipper-patterns made of cotton canvas cut into strips of the size and shape for slippers, more or less embroidered with worsted and silk. Due entry of the goods described in the invoice was made at the custom-house of the port; and enough appears to show that the collector liquidated the duties at thirty-five per cent *ad valorem*, holding that the importations were subject to duty under the last clause of sect. 6 of the act of June 30, 1864, as other manufactures of cotton not otherwise provided for, certain articles of cotton manufacture therein previously named being declared subject to the same rate of duty. Appeal to the Secretary of the Treasury and due protest by the importers are admitted.

Payment was made by the importer under protest; and his executors instituted the present action of assumpsit in the State court, subsequently removed into the Circuit Court, and there prosecuted, to recover the excess of duty which, as they allege, the collector unlawfully exacted, and which the importer was compelled to pay to get possession of his goods. Protest was made upon two grounds: 1, That the goods were duty free under the act of March 2, 1861 (12 Stat. 195); or, 2, that the goods were subject to a duty of ten per cent *ad valorem* only, under the act of July 14, 1862, entitled an act increasing temporarily the duties on imports. Id. 650.

Instead of that, the United States contended in the court below, and still contend, that the decision of the collector, as approved by the Secretary of the Treasury, is correct, and that the goods imported were subject to an *ad valorem* duty of thirty-five per cent.

Appropriate issues being joined, the parties went to trial, and the verdict and judgment were for the defendant. Exceptions were taken by the plaintiffs, and they sued out the present writ of error.

Questions of fact were determined by the jury, and the questions of law presented for decision are the same as those raised in the protest; or, in other words, the plaintiffs still maintain the two theories there set up: 1. That the goods imported were duty free; 2. That, if they were not duty free, they were subject only to an *ad valorem* duty of ten per cent.

Import duties of ten per cent *ad valorem* were imposed by the act of June 30, 1864, on lastings, mohair cloth, silk, twist, or other manufactures of cloth, woven or made in patterns of such size, shape, and form, or cut in such manner, as to be fit for shoes, slippers, boots, bootees, gaiters, and buttons exclusively, not combined with india-rubber, which duty, it will be observed, is imposed upon the enumerated articles by name.

Extensive lists of enumerated goods made of silk or wool, as well as of cotton, are also given in the fifth, sixth, and eighth sections of the act, which are made subject to the duty or rate of duty there provided. Manufactures of silk, or of which silk is the component material of chief value, not otherwise provided for, are there made subject to a duty of fifty per cent *ad valorem*. Provision is also made that all manufactures of wool of every description, made wholly or in part of wool, not otherwise provided for, twenty-four cents per pound, and, in addition thereto, forty per cent *ad valorem*. Cotton goods, to a large extent, are placed in the enumerated list; but the further provision is, that all other manufactures of cotton, not otherwise provided for, shall be subject to a duty of thirty-five per cent *ad valorem*.

Goods of the kind imported, if made of cotton, were, beyond all doubt, when that act went into operation, subject to a duty of ten per cent *ad valorem*, under the clause enumerating that class of goods and imposing that rate of duty. 13 id. 208.

Rates of duty on these articles remained unchanged from that time until the passage of the joint resolution of the 2d of March, 1867, which repealed the paragraph in sect. 5 of the act of June 30, 1864, enumerating the articles, and imposing a duty of ten per cent *ad valorem* on the same. Wool is also

included in the repealing clause; but that circumstance does not diminish the effect of the argument, as every article enumerated in the paragraph in question is specifically named in the repealing joint resolution. 14 id. 511.

Customs duties from that date were levied and collected on all the articles enumerated in that paragraph, if manufactured of cotton, at the rate of thirty-five per cent *ad valorem;* the ruling of the department being, that the repeal of the clause enumerating the articles left the same dutiable under the clause imposing a duty of thirty-five per cent on all manufactures of cotton not otherwise provided for in the same act.

Manufacturers of buttons complained that their business could not bear so high a rate of duty, and Congress, at their request, amended the joint resolution referred to, and took buttons out of its operation, the effect of which was that lastings, mohair cloth, silk, twist, or other manufactures of cloth, woven or made in such manner as to be fit for buttons exclusively, became dutiable under the clause repealed by the before-mentioned joint resolution, and only at the rate of ten per cent *ad valorem.*

Collated in this manner, these statutory regulations are as plain in their construction as any thing which depends upon a revenue act of Congress well can be. Cloth of the kind intended for buttons is dutiable at ten per cent *ad valorem;* but all the other articles of manufactured cloth, woven or made of cotton, in patterns of such size, shape, and form, or cut in such manner, as to be fit for shoes, slippers, bootees, or gaiters, are dutiable under the clause embracing manufactures of cotton not otherwise provided for, at the rate of thirty-five per cent *ad valorem.*

Attempt at one time was made, as indicated in the second ground of the protest, to maintain the proposition that the repeal by the joint resolution referred to, of the enumerating paragraph in the act of June 30, 1864, revived the same provision in the act of July 14, 1862, which imposed the same duty as the repealed paragraph. 12 id. 550; *Butler* v. *Russell,* 11 Int. Rev. Rec. 30.

Eminent counsel urged the proposition; but the court held otherwise, for reasons which are entirely satisfactory. Nor is it necessary to examine that question, as the plaintiffs in this

case abandon that theory, and rest their case entirely upon the first ground assumed in the protest, — that the goods imported are exempt from duty; or, in other words, that the effect of the joint resolution under consideration was to repeal the paragraph in the two prior acts, to wit, the act of 1864 and the act of 1862, and to revive the corresponding provision in the act of the 2d of March, 1861, which included such goods in the free list.

Cases arise undoubtedly where it is properly held that the repeal of a repealing statute revives the old law; but the court is of the opinion that the rule in that regard is inapplicable to the case before the court, for several reasons, which will more fully appear from a review of the acts of Congress immediately preceding the act under which the duties in this case were levied and collected.

Temporary increase of import duties, to the extent of fifty per cent on the rates authorized by law, was imposed on the 29th of April next preceding the passage of that act, by the joint resolution of that date. 13 Stat. 405. But the events of that period required stable regulations, and it was the evident intention of Congress, in passing the act in question, to effect a permanent increase of duties to meet the public exigency; and they accomplished it in part by diminishing the free list and by changing the basis of computation in ascertaining the dutiable value of imported merchandise, and by including the costs and charges in the appraisement. All prior acts upon the subject, in force at the time, to the extent therein specified, were revised; and it is safe to affirm that the articles enumerated in that act were subject to no other duty than that which the act imposed.

Evidence to support that proposition is found in almost every section of the act. No reference to any other act is made for that purpose; but the twenty-second section of the act provides that the existing laws shall extend to, and be in force for, the collection of the duties imposed by this act, for the prosecution and punishment of all offences, and for the recovery, collection, distribution, and remission of all fines, penalties, and forfeitures, as fully and effectually as if every regulation, penalty, forfeiture, provision, clause, matter, and thing to that effect in

the existing laws contained had been inserted in and re-enacted in this act. Plain provision is also made that "the duties upon all goods, wares, and merchandise imported from foreign countries, not provided for in this act, shall be and remain as they were according to existing laws" at the time the joint resolution was passed which temporarily increased the rates of duties fifty per cent. 13 id. 405.

These provisions must be taken in connection with the repealing clause of the act; and, when so considered, it is clear that Congress intended to make a comprehensive and complete revision to the extent specified, of all the antecedent acts imposing import duties. When a revising statute covers the whole subject-matter of antecedent statutes, the revising statute virtually repeals the antecedent enactment, unless there is something in the nature of the subject-matter or the revising statute to indicate a contrary intention. *Davies et al.* v. *Fairbairn et al.*, 3 How. 636; *School District* v. *Whitehead*, 2 Beas. 290.

None of these principles are controverted by the plaintiffs, but still they insist that the joint resolution which repealed the paragraph in the act of the 30th of June, 1864, imposing the duty of ten per cent *ad valorem* on the goods, had the effect to revive the provision in the act of 1861, which placed such goods in the free list.

Nothing is contained in the joint resolution expressing any such intention, or to indicate that Congress did not intend exactly what followed, in case the antecedent provision is held not to be revived. Congress has now provided that whenever an act is repealed which repealed a former act, such former act shall not thereby be revived, unless it shall be expressly so provided; but that provision was not in force when the cause of action in this case arose, nor is it referred to for any other purpose than to show that such a conclusion ought not to be adopted in a case where it is unreasonable to suppose that Congress intended such a result.

Had it been supposed that such was the effect of the joint resolution, the manufacturers of buttons would never have applied for the relief which was granted to them by the second joint resolution. Beyond all doubt, they applied for that relief

upon the ground that their importations were dutiable at thirty-five per cent *ad valorem;* and it is equally certain that Congress granted the relief upon the ground that the second joint resolution left the cloth which the manufacturers of buttons imported subject to the duty of ten per cent *ad valorem*, as imposed prior to the passage of the first joint resolution.

Public necessity demanded increased rates of import duties when the joint resolution of the 29th of April, 1864, was passed; and every one having any knowledge upon the subject knows that the act of the 30th of June of that year was enacted for the express purpose of increasing the rates of duty on foreign importations: nor is it any less certain that the repeal of the paragraph in that act rendering the goods of the character in question dutiable at the rate of ten per cent *ad valorem* was regarded by Congress and the Treasury Department, and everybody else interested in the legislation, as a measure having the effect to augment the rate of duty from ten per cent *ad valorem* to thirty-five per cent, as the duties were liquidated in this case.

Customs duties on such importations, except where the article was woven or cut in patterns, so as to be fit for buttons exclusively, were levied and collected pursuant to that view of the law from the date of the repeal of that paragraph, March 2, 1867, to Nov. 15, 1870, when the present controversy arose. In the mean time, the manufacturers of cotton cloth intended for buttons complained that they were oppressed, and Congress passed the joint resolution to relieve their grievance. 15 id. 24.

By that resolution, it was provided that the prior joint resolution shall not be considered to apply to lasting, mohair cloth, silk, twist, or other manufactures of cloth, woven or made in patterns of such size, shape, and form, or cut in such a manner, as to be fit for buttons exclusively.

Viewed in the light of these provisions, it seems almost past belief that the attentive reader should have any doubt as to the intent of Congress or the legal effect of the joint resolution which repealed the enumerating paragraph in the act passed to increase duties on imports. 13 id. 208.

In the exposition of statutes, the established rule is that the

intention of the law-maker is to be deduced from a view of the whole statute, and every material part of the same; and where there are several statutes relating to the same subject, they are all to be taken together, and one part compared with another in the construction of any one of the material provisions, because, in the absence of contradictory or inconsistent provisions, they are supposed to have the same object and as pertaining to the same system. Resort may be had to every part of a statute, or, where there is more than one *in pari materia*, to the whole system, for the purpose of collecting the legislative intention, which is the important inquiry in all cases where provisions are ambiguous or inconsistent.

Rules and maxims of interpretation are ordained as aids in discovering the true intent and meaning of any particular enactment; but the controlling rule of decision in applying the statute in any particular case is, that, whenever the intention of the legislature can be discovered from the words employed, in view of the subject-matter and the surrounding circumstances, it ought to prevail, unless it lead to absurd and irrational conclusions, which should never be imputed to the legislature, except when the language employed will admit of no other signification.

Apply these rules to the case before the court, and it is clear that the goods imported in this case were subject to an *ad valorem* duty of thirty-five per cent, as appears from the following considerations: —

1. Importations of the kind were duty free under the act of March 2, 1861, which placed "lastings, mohair cloth, silk, twist, or other manufactures of cloth cut in strips or patterns of the usual size and shape for shoes, slippers, bootees, gaiters, and buttons exclusively, not combined with india-rubber, in the free list. 12 id. 195.

2. Goods of the kind were subject to a duty, under the act of July 14, 1862, of ten per cent *ad valorem*, the goods being described as follows: Lasting, mohair cloth, silk, twist, or other manufacture of cloth, woven or made in patterns of such size, shape, and form, or cut in such manner, as to be fit for shoes, slippers, boots, bootees, gaiters, and buttons exclusively, not combined with india-rubber.

3. All of the provisions of those two tariff acts imposing import duties, or prescribing the rates of such duties, were, to the extent therein specified, revised by the act of June 30, 1864; and the provision there made in respect to the kind of goods in question was as follows: "Lastings, mohair cloth, silk, twist, or other manufacture of cloth, woven or made in patterns of such size, shape, and form, or cut in such manner, as to be fit for shoes, slippers, boots, bootees, gaiters, and buttons exclusively, not combined with india-rubber, ten per cent *ad valorem*."

4. Congress, March 2, 1867, repealed that paragraph, as set forth in the last-named act, reciting the paragraph *in hæc verba*, adding therein the word "wool," showing conclusively that Congress intended to repeal the entire paragraph, which had been three times before incorporated into the tariff acts.

5. Manufacturers of buttons complained that the effect of the repeal was to impose an *ad valorem* duty of thirty-five per cent on fabrics designed and used for their manufacture, and insisted that it was greater than their business could bear. They were heard; and Congress, having become satisfied that their complaint was reasonable, passed the joint resolution of the 29th of March, 1867, which provided that the prior joint resolution repealing that paragraph "shall not be construed to apply to lastings, mohair cloth, silk, twist, or other manufactures of cloth, woven or made in patterns of such size, shape, and form, or cut in such manner, as to be fit for buttons exclusively," leaving it in full operation as to every other article in the paragraph. 15 id. 24; *Butler* v. *Russell*, *supra*.

Weighed in the light of these suggestions, which are deduced entirely from a comparison of the different provisions in the acts of Congress upon the same subject, it seems impossible to deny that the ruling of the circuit judge is correct.

Other questions were discussed at the bar, but they are not material to the decision of the present case.

Judgment affirmed.

MITCHELL v. UNITED STATES.

Where the United States chartered a vessel for a "voyage or voyages," at a stipulated price per diem for every day when so employed, — *Held*, that the contract only embraced the employment of the vessel when on such voyage or voyages, and did not extend to demurrage.

APPEAL from the Court of Claims.

The facts are stated in the opinion of the court.

Mr. Thomas J. Durant for the appellant.

Mr. Assistant-Attorney-General Smith, contra.

MR. JUSTICE STRONG delivered the opinion of the court.

By the charter-party, the United States took to freight the claimant's steamer "Star of the South," lying in the port of New York, to load at New York or elsewhere, and proceed on a voyage thereinafter mentioned. The voyage was defined in an after-part of the charter to be "to New Orleans and return." It is evident, however, the parties had in mind possibly more than one voyage. It was stipulated that the charter should go into effect at 12 o'clock, M., on the fourteenth day of September, 1863, and should continue in force as long as said vessel might be required by the United States War Department; that is, of course, required for the voyages for which she was chartered. The United States also agreed to employ the vessel "for the voyage or voyages aforesaid." The only voyages before spoken of were from New York to New Orleans and return, or from New York to some other place of loading, thence to New Orleans, and return to New York. Under the charter, she might have been sent to China, to load there, and to proceed thence to New Orleans, returning to New York. She made a voyage from New York to New Orleans, and returned, discharging her return cargo on the 13th of October, 1863; and, being required for a second voyage to New Orleans, she was kept in continuous service from the discharge of her cargo on that day. She completed her second voyage by unloading her return cargo on the 22d of November, 1863, at New York, and from that time until Nov. 30 of the same year she performed no service for the government, though she was manned and equipped ready for

service. On the 30th she was taken into the service of the government again, under another charter-party. For the two voyages from New York to New Orleans and back the claimant was paid the price per day stipulated in the first charter-party, up to Nov. 22, 1863, and he was also paid the stipulated price for the services of the steamer from Nov. 30 to Dec. 30, 1863, apparently the time occupied by her voyage under the second charter. The claimant now demands the per diem compensation for the time between the 22d of November, 1863, when the steamer completed her second voyage by discharging her cargo at New York, and the 30th of November, 1863, when she was again taken into government service under another charter-party, — a period of eight days. The claim rests on the stipulation in the first charter, that the United States would pay for each and every day the vessel might be employed under the charter the sum of $450. That she was not employed by the government during those eight days is manifest from the findings of the Court of Claims, though she was ready for employment. She was chartered at first for a voyage or voyages. The contract was not a time charter, notwithstanding the compensation was agreed to be measured by the time during which she might be employed, and the contract only bound the charterers to employ her "on the voyage or voyages aforesaid," and to pay therefor the stipulated per diem compensation for every day she was employed; that is, employed on the voyages. There was no provision for demurrage.

It is argued, on behalf of the claimant, that the contract was to pay the per diem compensation until the steamer was returned to the owner, and that she was not so returned until notice of her delivery was given to him. But we do not so read the contract. The government undertook to furnish fuel for her navigation until she was returned to the owner in New York; but they undertook to pay only for the time she was employed. Such was the express agreement. Had it been intended that payment should be made until the vessel was formally handed over to the owner, or notice given to him of such surrender, the words "for each and every day the vessel may be employed" would not have been used. The promise would have been to pay for each and every day until the vessel should be returned

to the owner. In truth, she was not taken out of his possession. His officers and his seamen had charge of her; and the charterer obtained by the contract only their services in use of the vessel.

The Court of Claims found that, after the completion of the first voyage, Captain Stimson, the assistant-quartermaster at New York, indorsed on the charter-party the following order: "The services of the above vessel being required for a second voyage to New Orleans, she is kept in continuous service from the date of the discharge of her cargo, on the 13th of October, 1863." It is difficult to see why this indorsement was made or allowed, if the hiring was not for a voyage or voyages, and if it was not so understood by the parties. And when the second voyage was completed, on the 22d of November, the charter-party was suspended by order of Stimson; and it remained so suspended until Nov. 30, when the vessel was again taken into government service under another charter-party. If the contract was suspended, the vessel ceased to be in the control of the government, and the owner was at liberty to employ her at his will. And if during the period of suspension she was not out of government service, it would be incorrect to say she was again taken into that service. The quartermaster had no power to control suspended vessels.

Without saying more, it is enough for this case that the charter was for a voyage or voyages; that the engagement of the United States was to employ the vessel on the voyage or voyages, and to pay for each day she might be employed. During the eight days for which compensation is now claimed she was not thus employed, and consequently there is no liability resting on the government.

The judgment of the Court of Claims dismissing the claimant's petition will be affirmed; and it is

So ordered

WATER AND MINING COMPANY v. BUGBEY.

1. The act of March 3, 1853 (10 Stat. 244), granted for school purposes to California the public lands within sections 16 and 36 in each congressional township in that State, except so much of them whereon an actual settlement had been made before they were surveyed, and the settler claimed the right of pre-emption within three months after the return of the plats of the surveys to the local land-office. If he failed to make good his claim, the title to the land embraced by his settlement vested in the State as of the date of the completion of the surveys.
2. In this case, the title of the State to the demanded premises, being part of a school section, having become absolute May 19, 1866, a mining company could, under the act of July 26, 1866 (14 Stat. 253), acquire no right to them.

ERROR to the Supreme Court of the State of California.

The facts are stated in the opinion of the court.

Mr. Samuel Shellabarger and *Mr. J. M. Wilson* for the plaintiff in error.

Mr. Aaron A. Sargent, contra.

MR. CHIEF JUSTICE WAITE delivered the opinion of the court.

This was an action of ejectment, brought by Bugbey, the defendant in error, against the Natoma Water and Mining Company, the plaintiff in error, to recover possession of a part of the south half of section 16, township 10 north, of range 8 east, Mount Diablo base and meridian, in the State of California. He claimed title by grant from the State, and the company under the act of Congress of March 3, 1853, "to provide for the survey of public lands in California, the granting of pre-emption rights therein, and for other purposes" (10 Stat. 244), and the act of July 29, 1866, "granting the right of way to ditch and canal owners over the public lands, and for other purposes" (14 Stat. 251).

The decision of the Supreme Court of California having been against the title set up by the company, this writ of error was brought. The facts affecting the Federal question in the case are as follows: —

In 1851, the company commenced the construction of a canal upon the unoccupied and unsurveyed public lands of the United

States, for the purpose of supplying water to miners and others. This canal was completed, at large expense, in April, 1853, and the premises in controversy are included within its limits. By the act of March 3, 1853 (10 Stat. 244), Congress provided for the survey of the public lands of California, and granted sections 16 and 36 to the State, for school purposes. By sect. 7 of this act, it was provided, "that where any settlement, by the erection of a dwelling-house, or the cultivation of any portion of the land, shall be made on the sixteenth and thirty-sixth sections, before the same shall be surveyed, . . . other land shall be selected by the proper authorities of the State, in lieu thereof, agreeably to the provisions of the act of Congress approved May 20, 1826, . . ." 4 Stat. 179.

The survey of the lands in controversy was completed May 19, 1866, and the plats deposited in the United States land-office for the district, June 16, 1866. At that time, Bugbey was an actual settler upon the legal subdivision of the section 16 in which the premises are situated, and had thereon a dwelling-house, and agricultural and other improvements. He made no claim under the pre-emption laws of the United States. Other persons were also in possession of other portions of the section. The act of 1853 required (sect. 6) that, "where unsurveyed lands are claimed by pre-emption, the usual notice of such claim shall be filed within three months after the return of the plats of the surveys to the land-offices." On the 28th of September, 1866, the register of the United States land-office certified to the State land-office that no claim had been filed to this section 16, except the pre-emption of one Hancock, which was afterwards abandoned.

Sect. 9 of the act of July 26, 1866 (14 Stat. 253) is as follows: —

"That whenever, by priority of possession, rights to the use of water for mining, agricultural, manufacturing, or other purposes, have vested and accrued, and the same are recognized and acknowledged by the local customs, laws, and the decisions of the courts, the possessors and owners of such vested rights shall be maintained and protected in the same; and the right of way for the construction of ditches and canals, for the purposes aforesaid, is hereby acknowledged and confirmed: . . ."

The company has brought itself within the provisions of this section, if at the time of the passage of the act the United States held title to the lands.

On the 22d of April, 1867, Bugbey purchased the portion of the section on which the premises in controversy are situated from the State of California, and took a patent. The company does not in any manner connect itself with this title, or with that of any other occupant of the section previous to the survey.

In *Sherman* v. *Buick* (93 U. S. 209), it was decided that the State of California took no title to sections 16 and 36, under the act of 1853, as against an actual settler before the survey, claiming the benefit of the pre-emption laws, who perfected his claim by a patent from the United States. In such a case, the State must look for its indemnity to the provisions of sect. 7 of the act. As against all the world, except the pre-emption settler, the title of the United States passed to the State upon the completion of the surveys; and if the settler failed to assert his claim, or to make it good, the rights of the State became absolute. The language of the court is (p. 214): "These things [settlement and improvement under the law] being found to exist when the survey ascertained their location on a school section, the claim of the State to that particular piece of land was at an end; and it being shown in the proper mode to the proper officer of the United States, the right of the State to the land was gone, and in lieu of it she had acquired the right to select other land, agreeably to the act of 1826."

In that case, the controversy was between the settler, who had perfected his title from the United States, and a purchaser from the State. Here the company does not claim under the settler's title, but seeks by means of it to defeat that of the State, and thus leave the land in a condition to be operated upon by the act of July 26. The settler, however, was under no obligation to assert his claim, and he having abandoned it, the title of the State became absolute as of May 19, 1866, when the surveys were completed. The case stands, therefore, as if at that date the United States had parted with all interest in and control over the property. As the act of July 26 was not passed until

after that time, it follows that it could not operate upon this land in favor of the company.

This disposes of the only Federal question in the record.

Judgment affirmed.

BRAWLEY v. UNITED STATES.

1. Where a contract is made to sell or furnish certain goods identified by reference to independent circumstances, such as an entire lot deposited in a certain warehouse, or all that may be manufactured by the vendor in a certain establishment, or that may be shipped by his agent or correspondent in certain vessels, and the quantity is named, with the qualification of "about," or "more or less," or words of like import, the contract applies to the specific lot, and the naming of the quantity is regarded not as in the nature of a warranty, but only as an estimate of the probable amount, in reference to which good faith is all that is required of the party making it.
2. But where no such independent circumstances are referred to, and the engagement is to furnish goods of a certain quality or character to a certain amount, the quantity specified is material, and governs the contract.
3. If, however, the qualifying words, "about," "more or less," and the like, are supplemented by other stipulations or conditions which give them a broader scope or a more extensive significancy, then the contract is to be governed by such added stipulations or conditions.
4. Previous and contemporary transactions and facts may be very properly taken into consideration to ascertain the subject-matter of a contract, and the sense in which the parties may have used particular terms, but not to alter or modify the plain language which they have used.
5. Accordingly, where an agreement was entered into between the United States and a contractor, whereby the latter undertook to deliver at the post of Fort Pembina eight hundred and eighty cords of wood "more or less, as shall be determined to be necessary by the post-commander for the regular supply, in accordance with army regulations, of the troops and employés of the garrison of said post, for the fiscal year beginning July 1, 1871," and the post-commander, as soon as the contract came to his knowledge, and within four days after it was signed, notified the contractor that but forty cords of wood would be required thereon, and forbade his hauling any more to the government yard,—*Held*, that the United States was not liable to the contractor for any number of cords beyond the forty delivered.

APPEAL from the Court of Claims.

This is a petition by Brawley to recover the amount of eight hundred and forty cords of wood, at $3.99 per cord,

which the claimant alleges that he was prepared and ready to furnish, under a contract entered into by the claimant with Lieutenant-Colonel Holabird, Deputy Quartermaster-General United States Army, in May, 1871. The principal article, and that on which the present controversy arises, was in the following words: —

"I. That the said Daniel F. Brawley, his heirs, assignees, administrators, and executors, shall sell, furnish, and deliver, cut and split in lengths of four (4) feet, duly piled or corded under the direction and supervision of the post-quartermaster, within the enclosure of the post of Fort Pembina, Dakota Territory, eight hundred and eighty (880) cords of sound, of first quality, of merchantable oak wood, more or less, as shall be determined to be necessary, by the post-commander, for the regular supply, in accordance with army regulations, of the troops and employés of the garrison of said post, for the fiscal year beginning July 1, 1871, and ending June 30, 1872. The delivery of eight hundred and eighty (880) cords to be completed on or before Jan. 1, 1872; but any additional number of cords of wood that may be required over and above that amount may be delivered from time to time, regulated by the proper military authorities, based upon the actual necessities of the troops for the period above mentioned; provided, that if the wood be less than four (4) feet in length, due allowance shall be made for such shortage by an increased quantity, the cubical contents of the wood being measured in all cases. Delivery on this contract to begin on or before July 15, 1871, unless the time be extended by the commanding officer of the post."

It appears by the findings of the Court of Claims that said contract was entered into in pursuance of an estimate made by the proper officer of the quartermaster's department, and after an advertisement for proposals, upon which the claimant made a bid which was accepted, — the quantity named being eight hundred and eighty cords of wood or more. The bids were opened April 15, 1871. The contract was awarded to the claimant May 6, 1871, but, although dated on that day, it was not executed until about the 14th of June. About the 18th of the latter month, the post-commander of Fort Pembina first learned of it, and informed the claimant that but forty cords of wood would be required thereon, and forbade his haul-

ing any more to the government yard. On the 1st of July, written notice was given to him to the same effect.

But "before the contract was signed, the claimant had cut the eight hundred and eighty cords of wood, had taken ten ox-teams, with teamsters, wood-haulers, and supplies from Saint Cloud and Sauk Centre, Minnesota, a distance of three hundred and sixty miles, to Pembina, for the purpose of hauling the wood; and fifty-five cords thereof had been hauled to the fort by permission, and with the understanding that the claimant assumed all risk regarding the acceptance of the same. And twenty cords more were hauled there by him, upon the same understanding, before he received any notice that only forty cords would be received on the contract. Subsequently he hauled eight hundred cords to within about twenty-five rods of the fort, and left the same on the land of Mr. Myrick, because the wood, if left in the forest where it was cut, was in danger of being destroyed by the fires which annually run through that region.

"Forty cords of wood only were received and accepted by the post-commander, and for that the claimant has been paid according to the contract.

"The balance of the wood cut and hauled by the claimant remained where it was deposited by him until the autumn of 1873, when it was sold by said Myrick to one Stiles, a government contractor, for $3.62½ a cord.

"The post of Fort Pembina did not in fact need for the fiscal year commencing July 1, 1871, more than the forty cords of wood which were accepted by the defendant."

The Court of Claims dismissed the petition, and the claimant appealed.

Mr. John B. Sanborn for the appellant.

The negotiations between the parties preceding the execution of the contract should be considered in connection with it, in order to ascertain their precise intention at the time of making it. 1 Greenl. Evid., p. 128, sect. 8; id., pp. 129, 130, and authorities cited; *Robinson* v. *Fiske*, 25 Me. 401; *Higgins* v. *Wasgalt*, 34 id. 305; *Metcalf* v. *Taylor*, 36 id. 28; *Wilson* v. *Troup*, 2 Cow. (N. Y.) 196.

In a contract of this character, a specific quantity, if not

designed to be furnished, should not be mentioned. Fair dealing prohibits it; and the United States, above all others, should deal openly and fairly.

Where the words "more or less" are used in an executory contract in connection with a definite quantity, the law gives them only such force as may be necessary to relieve the parties from the precise quantity. A fixed quantity, with these words added in such a contract, can in no case have the force of the words, "so much as may be required." Benj. Sales, 569–571, and authorities cited.

All contracts for supplies for the army are required by law to be made on estimates, and hence for specific quantities.

The Solicitor-General, contra, cited *Grant* v. *United States*, 7 Wall. 331; *Gwillim* v. *Daniell*, 2 Cromp., M. & R. 61; *Hayward* v. *Scougall*, 3 Camp. 58; *Pembroke Iron Co.* v. *Parsons* 5 Gray (Mass.), 589; *Robinson* v. *Noble's Adm'rs*, 8 Pet. 181 *Lobenstein* v. *United States*, 91 U. S. 324.

MR. JUSTICE BRADLEY, after stating the case, delivered the opinion of the court.

From an examination of the authorities, it seems to us that the general rules which must govern this case may be expressed as follows: —

Where a contract is made to sell or furnish certain goods identified by reference to independent circumstances, such as an entire lot deposited in a certain warehouse, or all that may be manufactured by the vendor in a certain establishment, or that may be shipped by his agent or correspondent in certain vessels, and the quantity is named with the qualification of "about," or "more or less," or words of like import, the contract applies to the specific lot; and the naming of the quantity is not regarded as in the nature of a warranty, but only as an estimate of the probable amount, in reference to which good faith is all that is required of the party making it. In such cases, the governing rule is somewhat analogous to that which is applied in the description of lands, where natural boundaries and monuments control courses and distances and estimates of quantity.

But when no such independent circumstances are referred to,

and the engagement is to furnish goods of a certain quality or character to a certain amount, the quantity specified is material, and governs the contract. The addition of the qualifying words, "about," "more or less," and the like, in such cases, is only for the purpose of providing against accidental variations arising from slight and unimportant excesses or deficiencies in number, measure, or weight.

If, however, the qualifying words are supplemented by other stipulations or conditions which give them a broader scope or a more extensive significancy, then the contract is to be governed by such added stipulations or conditions. As, if it be agreed to furnish so many bushels of wheat, more or less, according to what the party receiving it shall require for the use of his mill, then the contract is not governed by the quantity named, nor by that quantity with slight and unimportant variations, but by what the receiving party shall require for the use of his mill; and the variation from the quantity named will depend upon his discretion and requirements, so long as he acts in good faith. So where a manufacturer contracts to deliver at a certain price all the articles he shall make in his factory for the space of two years, "say a thousand to twelve hundred gallons of naphtha per month," the designation of quantity is qualified not only by the indeterminate word "say," but by the fair discretion or ability of the manufacturer, always provided he acts in good faith. This was the precise decision in *Gwillim* v. *Daniell*, 2 Cromp., M. & R. 61, where Lord Abinger says: "The agreement is simply this, that the plaintiff undertakes to accept all the naphtha that the defendant may happen to manufacture within the period of two years. The words, 'say from one thousand to twelve hundred gallons [per month],' are not shown to mean that the defendant undertook, at all events, that the quantity manufactured should amount to so much. If by fraud the defendant manufactured less than he ought to have done, the breach should have been shaped accordingly. Here it does not appear that, in the ordinary course of his manufacture, the defendant ought to have produced a larger quantity than he has done; and we cannot, therefore, say that he has broken his contract."

We think that there is manifest reason in this decision, and

that the present case is within it. The contract was not for the delivery of any particular lot, or any particular quantity, but to deliver at the post of Fort Pembina eight hundred and eighty cords of wood, "more or less, as shall be determined to be necessary by the post-commander for the regular supply, in accordance with army regulations, of the troops and employés of the garrison of said post, for the fiscal year beginning July 1, 1871." These are the determinative words of the contract, and the quantity designated, eight hundred and eighty cords, is to be regarded merely as an estimate of what the officer making the contract at the time supposed might be required. The substantial engagement was to furnish what should be determined to be necessary by the post-commander for the regular supply for the year, in accordance with army regulations. The post-commander, as soon as he learned of the contract, and within four days after it was signed, informed the claimant that but forty cords of wood would be required thereon, and forbid his hauling any more to the government yard. About a fortnight later, on the 1st of July, 1871, written notice to the same effect was served on the claimant, signed by the post-commander. And the Court of Claims finds, as a fact, that the post of Fort Pembina did not need for the fiscal year in question more than the forty cords of wood which were accepted by the defendants; thus precluding any plea that, in fixing and determining the amount required, the post-commander was actuated by any want of good faith.

Reference is made to the previous negotiations which led to the making of the contract, the bid of the claimant, the fact that the contract was awarded to him on his bid as early as May, and that, on the faith and expectation that the quantity named would be wanted, he had cut the eight hundred and eighty cords of wood before the contract was signed.

All this is irrelevant matter. The written contract merged all previous negotiations, and is presumed, in law, to express the final understanding of the parties. If the contract did not express the true agreement, it was the claimant's folly to have signed it. The court cannot be governed by any such outside considerations. Previous and contemporary transactions and facts may be very properly taken into consideration to ascertain the

subject-matter of a contract, and the sense in which the parties may have used particular terms, but not to alter or modify the plain language which they have used.

Judgment affirmed.

FERGUSON v. McLAUGHLIN.

Under sect. 6 of the act of March 3, 1853 (10 Stat. 244), a settler upon unsurveyed public lands in California has no valid claim to pre-empt a quarter-section, or any part thereof included in his settlement, unless it appears by the government surveys, when the same are made and filed in the local land-office, that his dwelling-house was on that quarter-section.

ERROR to the Supreme Court of the State of California.

Mr. J. A. Moultrie for the defendant in error.

There was no opposing counsel.

MR. JUSTICE MILLER delivered the opinion of the court.

The case before us was originally an action to recover possession of land, brought in the proper court of the State of California.

The plaintiff proved a patent from the United States to the Western Pacific Railroad Company, and a conveyance by said company to him of the land in dispute. In conformity to the practice in the courts of California, the defendant, Ferguson, filed an answer in the nature of a cross-bill in equity, which alleged that while plaintiff had the apparent legal title, he held it, or should be decreed to hold it, for the benefit of the defendant. The ground of this equitable right, briefly stated, is, that the defendant had made a valid claim to the land under the pre-emption laws before the inception of plaintiff's title, and that although this matter had been contested before the officers of the Land Department, and they had decided in favor of the Western Pacific Railroad Company, yet that decision was erroneous in law and in fact; and he prayed the court to decree him that relief which he was in equity entitled to.

The case was submitted to the court, whose findings of fact are in the record, and whose judgment in favor of the plaintiff

in the court below was affirmed by the Supreme Court of the State.

This writ of error brings before us the question whether, on the facts so found, the defendant below, the plaintiff here, is entitled to be declared the equitable owner of the land for which the other party recovered judgment.

There is not the slightest evidence of fraud or of any mistake of fact in the proceedings before the Land Department. There is very little evidence of what did take place there, and especially of what was proved there.

But there is in the findings of the court a statement that his claim was rejected by the land-office on two grounds; namely, 1, That his residence was not on any part of the congressional subdivision to which this land belonged; and, 2, that he had sold part of the land for which he had filed his original pre-emption claim.

The act of Congress of 1853, providing for the survey, pre-emption, and sale of the public lands in California, which was before this court in *Sherman* v. *Buick* (93 U. S. 209), declares that all those lands, with certain exceptions not pertinent to this case, shall, whether surveyed or unsurveyed, be subject to the pre-emption law of the 4th of September, 1841, with all the exceptions, conditions, and limitations therein contained. One of those limitations is, that the person claiming the right of pre-emption to any part of the public land must have erected a dwelling-house and made an improvement thereon, and that the congressional subdivision for which claim is made must include the claimant's residence. It is true that under that law no valid settlement could be made until after the land had been surveyed, and the party could know just where he was making his residence, with reference to the congressional subdivision which he proposed to claim; while under the act of 1853 he could settle before the surveys, and make his claim after they had been made and filed in the local office. The officers of the Land Department have, however, held that, when he comes before them finally to assert his claim, he could not establish a valid claim for any quarter-section, or any part of a quarter-section, unless his dwelling-house, his actual residence, was on some part of that quarter-section. In

this construction of the act of 1853 we concur, and it is fatal to the case of plaintiff in error. And this question of law is the only one of which this court can have jurisdiction in the present case.

It appears very clearly by the facts found that Ferguson's original claim or settlement of about one hundred and fifty acres is subdivided by the township line which runs between townships six and seven south, of range one west, of the Mount Diablo meridian, and that about thirty acres, including his residence, fell within the latter. He afterwards secured a title to this as a settler on land granted to the town of Santa Clara by act of Congress, which act provided that the grant should inure to the benefit of those who were actual settlers on any part of it.

As we have already said, the land-office held that this fact was fatal to his right of pre-emption in any portion of township 6, though it adjoined his land in the other township, and was part of his improvement.

We see no error in that construction of the law, and none in the judgment of the Supreme Court of California.

Judgment affirmed.

WILLIAMS v. BRUFFY.

1. The Confederate States was an illegal organization, within the provision of the Constitution of the United States prohibiting any treaty, alliance, or confederation of one State with another; whatever efficacy, therefore, its enactments possessed in any State entering into that organization must be attributed to the sanction given to them by that State.
2. Any enactment, from whatever source originating, to which a State gives the force of law, is a statute of the State, within the meaning of the act regulating the appellate jurisdiction of this court over the judgments and decrees of the State courts.
3. An enactment of the Confederate States, enforced as a law of one of the States composing that confederation, sequestrating a debt owing by one of its citizens to a citizen of a loyal State as an alien enemy, is void, because it impairs the obligation of the contract, and discriminates against citizens of another State. The constitutional provision prohibiting a State from passing a law impairing the obligation of contracts equally prohibits a State from enforcing as a law an enactment of that character, from whatever source originating.

4. When a rebellion becomes organized, and attains such proportions as to be able to put a formidable military force in the field, it is usual for the established government to concede to it some belligerent rights; but to what extent they shall be accorded to the insurgents depends upon the considerations of justice, humanity, and policy controlling the government.

5. The concession of belligerent rights to the Confederate government sanctioned no hostile legislation against the citizens of the loyal States.

6. Where property held by parties in the insurgent States, as trustees or bailees of loyal citizens, was forcibly taken from them, they may in some instances be released from liability, their release in such cases depending upon the same principles which control in ordinary cases of violence by an unlawful combination too powerful to be successfully resisted; but debts due such citizens, not being tangible things subject to seizure and removal, are not extinguished, by reason of the debtor's coerced payment of equivalent sums to an unlawful combination. They can only be satisfied when paid to the creditors to whom they are due, or to others by direction of lawful authority.

7. *De facto* governments of two kinds considered: (1.) Such as exists after it has expelled the regularly constituted authorities from the seats of power and the public offices, and established its own functionaries in their places, so as to represent in fact the sovereignty of the nation. As far as other nations are concerned, such a government is treated as in most respects possessing rightful authority; its contracts and treaties are usually enforced; its acquisitions are retained; its legislation is in general recognized; and the rights acquired under it are, with few exceptions, respected after the restoration of the authorities which were expelled. (2.) Such as exists where a portion of the inhabitants of a country have separated themselves from the parent State and established an independent government. The validity of its acts, both against the parent State and the citizens or subjects thereof, depends entirely upon its ultimate success; if it fail to establish itself permanently, all such acts perish with it; if it succeed and become recognized, its acts from the commencement of its existence are upheld as those of an independent nation.

8. The Confederate government was distinguished from each kind of such *de facto* governments. Whatever *de facto* character may be ascribed to it consists solely in the fact that for nearly four years it maintained a contest with the United States, and exercised dominion over a large extent of territory. Whilst it existed, it was simply the military representative of the insurrection against the authority of the United States; when its military forces were overthrown, it utterly perished, and with it all its enactments.

9. The legislative acts of the several States stand on different grounds; and, so far as they did not impair or tend to impair the supremacy of the national authority, or the just rights of citizens under the Constitution, they are, in general, to be treated as valid and binding.

ERROR to the Supreme Court of Appeals of the State of Virginia.

This was an action of assumpsit for certain goods sold by the plaintiffs in March, 1861, to George Bruffy, since deceased,

brought against the administrator of his estate in the Circuit Court of Rockingham County, Virginia. The plaintiffs at the time of the sale were and still are residents of the State of Pennsylvania; and the deceased was then, and until his death, which occurred during the war, continued to be, a resident of the State of Virginia.

The defendant pleaded the general issue, and two special pleas, in one of which he averred, in substance, that Pennsylvania was one of the United States, and that Virginia was one of the States which had formed a confederation known as the Confederate States; that from some time in 1861 until some time in 1865 the government of the United States was at war with the government of the Confederate States; that on the 30th of August, 1861, the Confederate States enacted a law sequestrating the lands, tenements, goods, chattels, rights, and credits within the Confederate States, and every right and interest therein, held by or for any alien enemy since the 21st of May, 1861, excepting such debts as may have been paid into the treasury of one of the Confederate States prior to the passage of the law, and making it the duty of every attorney, agent, former partner, trustee, or other person holding or controlling any such property or interest, to inform the receiver of the Confederate States of the fact, and to render an account thereof, and, so far as practicable, to place the same in the hands of the receiver, and declaring that thereafter such person should be acquitted of all responsibility for the property thus turned over, and that any person failing to give the information mentioned should be deemed guilty of a high misdemeanor; that on the 1st of January, 1862, this law being in force, the defendant's intestate paid over to the receiver of the Confederate States the amount claimed by the plaintiffs, and that by virtue of such payment he is discharged from the debt. The second special plea is substantially like the first, with the further averment that the debt due to the plaintiffs was sequestrated by the decree of a Confederate district court in Virginia, upon the petition of the receiver, who afterwards collected it with interest.

The plaintiffs demurred to these pleas; but the demurrers were overruled. The case was then submitted to the court

upon certain depositions and an agreed statement of facts. They established the sale and delivery of the goods, the residence of the plaintiffs and of the deceased during the war, and the payment by the latter of the debt in suit to the sequestrator of the Confederate government under a judgment of a Confederate district court. The court below gave judgment for the defendant; and the subsequent application of the plaintiffs to the Supreme Court of Appeals for a *supersedeas* was denied, that court being of opinion that the judgment was plainly right. Such a denial is deemed equivalent to an affirmance of the judgment, so far as to authorize a writ of error from this court to the Court of Appeals.

Mr. Timothy O. Howe and *Mr. Enoch Totten* for the plaintiffs in error.

1. In the decision in this cause there was drawn in question the validity of a statute of, or an authority exercised under, Virginia, on the ground that it was repugnant to the Constitution of the United States, and the decision was in favor of such validity. If she had not violated the Constitution by entering into an "agreement or compact" with other States, the debtor of the plaintiffs would not have been within the so-called Confederacy. The efficacy of the sequestration law, so far as it operated upon their rights and privileges, was imparted to it by Virginia, through her unlawful acts and combinations with other States.

2. The decision below was adverse to the title, right, privilege, and immunity under the Constitution of the United States, which the plaintiffs specially claimed.

The Constitution declares that "the citizens of each State shall be entitled to all the privileges and immunities of citizens in the several States;" and that "no State shall make or enforce any law which shall abridge the privileges or immunities of citizens of the United States; nor shall any State deprive any person of life, liberty, or property without due process of law; nor deny to any person within its jurisdiction the equal protection of the laws."

As citizens of Pennsylvania, the plaintiffs, under these provisions, had a right to pass through or reside in Virginia; to take, hold, and dispose of property within her borders; to

institute and maintain actions in her courts, and to have the same rules of law enforced in the determination of them as would govern in suits between her citizens. *Corfield* v. *Coryell*, 4 Wash. 371; *Ward* v. *Maryland*, 12 Wall. 418. They were entitled to every privilege or immunity allowed to her most favored class of citizens. *Tenn.* v. *Ambrose*, 1 Meigs, 331; *Paul* v. *Virginia*, 8 Wall. 168; Slaughter-House Cases, 16 id. 75. The courts of Virginia, in a suit between her own citizens, could not have recognized as valid the defence set up below. This confiscation law which she enforced applies exclusively "to alien enemies," or, in other words, to citizens of the loyal States, and there can be no question that it impaired the obligation of this contract, and withheld from these plaintiffs the privileges and immunities to which they were undoubtedly entitled.

Mr. Henry W. Garnett and *Mr. Thomas J. Miller* for the defendant in error.

1. This court has no jurisdiction. No question arose touching the validity of a statute of any State, or of an authority exercised under it. "The Confederate States of America," so called, was an entirely different thing from the State of Virginia. Nor was there a decision against any title, right, privilege, or immunity, claimed under the Constitution, or any treaty, statute of, or commission held or authority exercised under, the United States.

If, on other grounds, the judgment below impaired or failed to give effect to the contract sued on, there is no authority here to review it. *Knox* v. *Exchange Bank*, 12 Wall. 379.

2. The Confederate government was a government in fact, exercising supreme authority over the people of the States composing it, and its acts controlling their conduct must be their legal vindication. The accepted writers on public law establish these propositions.

(*a.*) That a *de facto* government, enjoying belligerent rights, has control over the territory it holds, and its laws are binding on all persons residing within its actual jurisdiction, in connection with all things situate there or owing to an alien enemy.

(*b.*) That the test of such *de facto* government is the num

ber of the population adhering to it; the armies it organizes in the field; the power it manifests in its resistance to the enemy; the facts recognized or repudiated by the enemy, such as interchanging prisoners of war, establishing blockades, &c.

We refer to the conclusions of law as contained in Wheaton's International Treatise, p. 23, Dana's note, on the recognition of belligerency. The Confederate government did comprehend, in its influence and authority, every thing constituting belligerency, and the *de facto* power entitling it to such rights as grow out of this condition of civil war. *Mauran* v. *Insurance Company*, 6 Wall. 1; *Thorington* v. *Smith*, 8 id. 1.

If the belligerent government enacts a law of confiscation or sequestration, and a debt is paid under its authority, the alien creditor can never hold the debtor to a second liability. The debt is extinguished just as if it had been paid to the creditor. *Ware* v. *Hylton*, 3 Dall. 227; Vattel, c. 3, pp. 8, 138, c. 9, sect. 161; *Brown* v. *United States*, 8 Cranch, 126, 129; Kent Com. 1, 59; Halleck, 365; Woolsey, 118.

The right of the government to confiscate and sequestrate does not depend upon its being *de jure*. If it be *de facto*, and possessed of belligerent rights, nothing more is required. It is not the party, but the individual, who lives within its territory; and he is relieved, because it was not possible for him legally to avoid the payment of the debt to a power which he could not resist. It has been deemed better for society that an alien enemy should lose his debt, than that his debtor should be made twice to pay what he once has paid, according to the established rules of war and of nations. The government *de facto* may fail to be a government *de jure*, but the individual who holds the property of another may rightfully surrender it at the demands and coercion of that government.

We respectfully refer to the elaborate argument of Mr. Green, in the case of *Keppel's Administrators* v. *Petersburg Railroad Co.* (Chase's Decisions, pp. 174–203), and to *Prize Cases* (2 Black, 635); *Thorington* v. *Smith*, *supra*, and to Vattel, p. 425; Wheaton, sect. 296; and to Halleck, on the rights of belligerents, and the authority of *de facto* governments.

MR. JUSTICE FIELD delivered the opinion of the court.

The question for our determination arises upon the special pleas, and relates to the sufficiency of the facts therein set forth as a defence; that is, to the effect of the sequestration of the debt by the Confederate government as a bar to the action.

There is, however, a preliminary question to be considered. It is contended by the defendant that the record presents no ground for the exercise of our appellate jurisdiction. The second section of the amendatory judiciary act of 1867, as given in the Revised Statutes, provides for a review by this court of the final judgment or decree of the highest court of a State in which a decision could be had, in three classes of cases.

1st, Where is drawn in question the validity of a treaty or statute of, or an authority exercised under, the United States, and the decision is against their validity.

2d, Where is drawn in question the validity of a statute of, or an authority exercised under, any State, on the ground of their being repugnant to the Constitution, treaties, or laws of the United States, and the decision is in favor of their validity; and,

3d, Where any title, right, privilege, or immunity is claimed under the Constitution, or any treaty or statute of, or commission held or authority exercised under, the United States, and the decision is against the title, right, privilege, or immunity specially set up or claimed by either party under such Constitution, treaty, statute, commission, or authority.

It is upon the last two clauses that the jurisdiction of the court is asserted by the plaintiffs; and we are of opinion that it can be maintained upon both of them. The pleas aver that a confederation was formed by Virginia and other States, called the Confederate States of America, and that under a law of this confederation, enforced in Virginia, the debt due to the plaintiffs was sequestrated. Now, the Constitution of the United States prohibits any treaty, alliance, or confederation by one State with another. The organization whose enactment is pleaded cannot, therefore, be regarded in this court as having any legal existence. It follows that whatever efficacy the enactment possessed in Virginia must be attributed to the sanction

given to it by that State. Any enactment, from whatever source originating, to which a State gives the force of law is a statute of the State, within the meaning of the clause cited relating to the jurisdiction of this court. It would be a narrow construction to limit the term to such enactments as have gone through various stages of consideration by the legislature. There may be many acts authorized by the constitution of a State, or by the convention that framed it, which have not been submitted to the consideration of its legislature, yet have all the efficacy of laws. By the only authority which can be recognized as having any legal existence, that is, the State of Virginia, this act of the unauthorized confederation was enforced as a law of the Commonwealth. Its validity was drawn in question on the ground that it was repugnant to the Constitution of the United States; and the decision of the court below was in favor of its validity. Its repugnancy was asserted in this, that it impaired the obligation of the contract between the plaintiffs and the deceased, and undertook to release the latter from liability, contrary to the express prohibition of that instrument; and also in this, that it discriminated against the plaintiffs as citizens of a loyal State, and refused to them the same privileges accorded to the citizens of Virginia, contrary to the provision declaring that "the citizens of each State shall be entitled to all the privileges and immunities of citizens in the several States." This provision has been held, in repeated adjudications of this court, to prohibit discriminating legislation by one State against the citizens of another State, and to secure to them the equal protection of its laws, and the same freedom possessed by its own citizens in the acquisition and enjoyment of property. *Corfield* v. *Coryell*, 4 Wash. C. C. 371; *Ward* v. *Maryland*, 12 Wall. 418; *Paul* v. *Virginia*, 8 id. 168. The enactment of the confederation which by the assent of Virginia was enforced as a law in that Commonwealth, and which is now invoked by the defendant, not only impaired, but attempted to destroy, the obligation of the contract of the deceased with the plaintiffs; and it discriminated against them as citizens of a State that maintained its allegiance to the Union. The demurrers to the special pleas raised these objections. The decision made involved the upholding of the Confederate enactment and

the denial of the immunity claimed by the plaintiffs. It could not have been made without passing upon both of these points. It is sufficient to give this court jurisdiction that, though not in terms specially stated in the pleadings, they were necessarily involved in the decision, and that without their consideration the judgment would not have been rendered. We have no doubt of our jurisdiction, and we proceed, therefore, to the merits of the case.

Treating the Confederate enactment as a law of the State which we can consider, there can be no doubt of its invalidity. The constitutional provision prohibiting a State from *passing* a law impairing the obligation of contracts, equally prohibits a State from *enforcing* as a law an enactment of that character, from whatever source originating. And the constitutional provision securing to the citizens of each State the privileges and immunities of citizens in the several States could not have a more fitting application than in condemning as utterly void the act under consideration here, which Virginia enforced as a law of that Commonwealth; treating the plaintiffs as alien enemies because of their loyalty to the Union, and decreeing for that reason a sequestration of debts due to them by its citizens.

The defendant, however, takes the ground that the enactment of the Confederate States is that of an independent nation, and must be so treated in this case. His contention is substantially this: that the Confederate government, from April, 1861, until it was overthrown in 1865, was a government *de facto*, complete in all its parts, exercising jurisdiction over a well-defined territory, which included that portion of Virginia where the deceased resided, and as such *de facto* government it engaged in war with the United States; and possessed, and was justified in exercising within its territorial limits, all the rights of war which belonged to an independent nation, and, among them, that of confiscating debts due by its citizens to its enemies.

In support of this position, reference is made to numerous instances of *de facto* governments which have existed in England and in other parts of Europe and in America; to the doctrines of jurists and writers on public law respecting the powers of such governments, and the validity accorded to their acts; to the opinion of this court in *Thorington* v. *Smith* and in

the *Prize Cases;* to the concession of belligerent rights to the Confederate government; and to the action of the States during our own revolutionary war and the period immediately following it.

We do not question the doctrines of public law which have been invoked, nor their application in proper cases; but it will be found, upon examination, that there is an essential difference between the government of the Confederate States and those *de facto* governments. The latter are of two kinds. One of them is such as exists after it has expelled the regularly constituted authorities from the seats of power and the public offices, and established its own functionaries in their places, so as to represent in fact the sovereignty of the nation. Such was the government of England under the Commonwealth established upon the execution of the king and the overthrow of the loyalists. As far as other nations are concerned, such a government is treated as in most respects possessing rightful authority; its contracts and treaties are usually enforced; its acquisitions are retained; its legislation is in general recognized; and the rights acquired under it are, with few exceptions, respected after the restoration of the authorities which were expelled. All that counsel say of *de facto* governments is justly said of a government of this kind. But the Confederate government was not of this kind. It never represented the nation, it never expelled the public authorities from the country, it never entered into any treaties, nor was it ever recognized as that of an independent power. It collected an immense military force, and temporarily expelled the authorities of the United States from the territory over which it exercised an usurped dominion: but in that expulsion the United States never acquiesced; on the contrary, they immediately resorted to similar force to regain possession of that territory and re-establish their authority, and they continued to use such force until they succeeded. It would be useless to comment upon the striking contrast between a government of this nature, which, with all its military strength, never had undisputed possession of power for a single day, and a government like that of the Commonwealth of England under Parliament or Cromwell.

The other kind of *de facto* governments, to which the doc-

trines cited relate, is such as exists where a portion of the inhabitants of a country have separated themselves from the parent State and established an independent government. The validity of its acts, both against the parent State and its citizens or subjects, depends entirely upon its ultimate success. If it fail to establish itself permanently, all such acts perish with it. If it succeed, and become recognized, its acts from the commencement of its existence are upheld as those of an independent nation. Such was the case of the State governments under the old confederation on their separation from the British crown. Having made good their declaration of independence, every thing they did from that date was as valid as if their independence had been at once acknowledged. Confiscations, therefore, of enemy's property made by them were sustained as if made by an independent nation. But if they had failed in securing their independence, and the authority of the King had been re-established in this country, no one would contend that their acts against him, or his loyal subjects, could have been upheld as resting upon any legal foundation.

No case has been cited in argument, and we think none can be found, in which the acts of a portion of a State unsuccessfully attempting to establish a separate revolutionary government have been sustained as a matter of legal right. As justly observed by the late Chief Justice in *Shortridge & Co.* v. *Macon*, decided at the circuit, and, in all material respects, like the one at bar, "Those who engage in rebellion must consider the consequences. If they succeed, rebellion becomes revolution, and the new government will justify its founders. If they fail, all their acts hostile to the rightful government are violations of law, and originate no rights which can be recognized by the courts of the nation whose authority and existence have been alike assailed." Chase's Decisions, 136.

When a rebellion becomes organized, and attains such proportions as to be able to put a formidable military force in the field, it is usual for the established government to concede to it some belligerent rights. This concession is made in the interests of humanity, to prevent the cruelties which would inevitably follow mutual reprisals and retaliations. But belligerent rights, as the terms import, are rights which exist only during

war; and to what extent they shall be accorded to insurgents depends upon the considerations of justice, humanity, and policy controlling the government. The rule stated by Vattel, that the justice of the cause between two enemies being by the law of nations reputed to be equal, whatsoever is permitted to the one in virtue of war is also permitted to the other, applies only to cases of regular war between independent nations. It has no application to the case of a war between an established government, and insurgents seeking to withdraw themselves from its jurisdiction or to overthrow its authority. Halleck's Inter. Law, c. 14, sect. 9. The concession made to the Confederate government in its military character was shown in the treatment of captives as prisoners of war, the exchange of prisoners, the recognition of flags of truce, the release of officers on parole, and other arrangements having a tendency to mitigate the evils of the contest. The concession placed its soldiers and military officers in its service on the footing of those engaged in lawful war, and exempted them from liability for acts of legitimate warfare. But it conferred no further immunity or any other rights. It in no respect condoned acts against the government not committed by armed force in the military service of the rebellious organization; it sanctioned no hostile legislation; it gave validity to no contracts for military stores; and it impaired in no respect the rights of loyal citizens as they had existed at the commencement of hostilities. Parties residing in the insurrectionary territory, having property in their possession as trustees or bailees of loyal citizens, may in some instances have had such property taken from them by force; and in that event they may perhaps be released from liability. Their release will depend upon the same principles which control in ordinary cases of violence by an unlawful combination too powerful to be successfully resisted.

But, debts not being tangible things subject to physical seizure and removal, the debtors cannot claim release from liability to their creditors by reason of the coerced payment of equivalent sums to an unlawful combination. The debts can only be satisfied when paid to the creditors to whom they are due, or to others by direction of lawful authority. Any sum which

the unlawful combination may have compelled the debtors to pay to its agents on account of debts to loyal citizens cannot have any effect upon their obligations: they remain subsisting and unimpaired. The concession of belligerent rights to the rebellious organization yielded nothing to its pretensions of legality. If it had succeeded in its contest, it would have protected the debtor from further claim for the debt; but, as it failed, the creditor may have recourse to the courts of the country as prior to the rebellion. It would be a strange thing if the nation, after succeeding in suppressing the rebellion and re-establishing its authority over the insurrectionary district, should, by any of its tribunals, recognize as valid the attempt of the rebellious organization to confiscate a debt due to a loyal citizen as a penalty for his loyalty. Such a thing would be unprecedented in the history of unsuccessful rebellions, and would rest upon no just principle.

The immense power exercised by the government of the Confederate States for nearly four years, the territory over which it extended, the vast resources it wielded, and the millions who acknowledged its authority, present an imposing spectacle well fitted to mislead the mind in considering the legal character of that organization. It claimed to represent an independent nation and to possess sovereign powers; and as such to displace the jurisdiction and authority of the United States from nearly half of their territory, and, instead of their laws, to substitute and enforce those of its own enactment. Its pretensions being resisted, they were submitted to the arbitrament of war. In that contest the Confederacy failed; and in its failure its pretensions were dissipated, its armies scattered, and the whole fabric of its government broken in pieces. The very property it had amassed passed to the nation. The United States, during the whole contest, never for one moment renounced their claim to supreme jurisdiction over the whole country, and to the allegiance of every citizen of the republic. They never acknowledged in any form, or through any of their departments, the lawfulness of the rebellious organization or the validity of any of its acts, except so far as such acknowledgment may have arisen from conceding to its armed forces in the conduct of the war the standing and rights of those

engaged in lawful warfare. They never recognized its asserted power of rightful legislation.

There is nothing in the language used in *Thorington* v. *Smith* (8 Wall. 1) which conflicts with these views. In that case, the Confederate government is characterized as one of paramount force, and classed among the governments of which the one maintained by Great Britain in Castine, from September, 1814, to the treaty of peace in 1815, and the one maintained by the United States in Tampico, during our war with Mexico, are examples. Whilst the British retained possession of Castine, the inhabitants were held to be subject to such laws as the British government chose to recognize and impose. Whilst the United States retained possession of Tampico, it was held that it must be regarded and respected as their territory. The Confederate government, the court observed, differed from these temporary governments in the circumstance that its authority did not originate in lawful acts of regular war: but it was not, on that account, less actual or less supreme; and its supremacy, while not justifying acts of hostility to the United States, "made obedience to its authority in civil and local matters not only a necessity, but a duty." All that was meant by this language was, that as the actual supremacy of the Confederate government existed over certain territory, individual resistance to its authority then would have been futile, and, therefore, unjustifiable. In the face of an overwhelming force, obedience in such matters may often be a necessity, and, in the interests of order, a duty. No concession is thus made to the rightfulness of the authority exercised.

Nor is there any thing in the decision of this court in the *Prize Cases* which militates against the views expressed. It was there simply held, that when parties in rebellion had occupied and held in a hostile manner a portion of the territory of the country, declared their independence, cast off their allegiance, organized armies, and commenced hostilities against the government of the United States, war existed; that the President was bound to recognize the fact, and meet it without waiting for the action of Congress; that it was for him to determine what degree of force the crisis demanded, and whether the hostile forces were of such magnitude as to require him to

accord to them the character of belligerents; and that he had the right to institute a blockade of ports in their possession, which neutrals were bound to recognize. It was also held, that as the rebellious parties had formed a confederacy, and thus become an organized body, and the territory dominated by them was defined, and the President had conceded to this organization in its military character belligerent rights, all the territory must be regarded as enemy's territory, and its inhabitants as enemies, whose property on the high seas would be lawful subjects of capture. There is nothing in these doctrines which justified the Confederate States in claiming the *status* of foreign States during the war, or in treating the inhabitants of the loyal States as alien enemies.

Nor is there anything in the citations so often made from Wheaton and Vattel, as to the rights of contending parties in a civil war, which, if properly applied, militates against these views. After stating that, according to Grotius, a civil war is public on the side of the established government, and private on the part of the people resisting its authority, Wheaton says: "But the general usage of nations regards such a war as entitling both the contending parties to all the rights of war as against each other, and even as respects neutral nations." Wheaton, Int. Law, sect. 296. The writer is here referring to the consideration with which foreign nations treat a civil war in another country. So far as they are concerned, the contending parties to such a war, once recognized as belligerents, are regarded as entitled to all the rights of war. As between the belligerent parties, foreign nations, from general usage, are expected to observe a strict neutrality. The language used has no reference to the rights which a sovereign must concede, or is expected to concede, to insurgents in armed rebellion against his authority. Upon the doctrine stated in the citation the United States acted towards the contending parties in the civil war in South America. In speaking on this subject, in the case of *The Santissima Trinidad* (7 Wheat. 283), this court said: "The government of the United States has recognized the existence of a civil war between Spain and her colonies, and has avowed a determination to remain neutral between the parties, and to allow to each the same rights of

asylum and hospitality and intercourse. Each party is, therefore, deemed by us a belligerent nation, having, so far as concerns us, the sovereign rights of war, and entitled to be respected in the exercise of those rights. We cannot interfere to the prejudice of either belligerent, without making ourselves a party to the contest, and departing from the position of neutrality."

Vattel says: "A civil war breaks the bands of society and government, or, at least, suspends their force and effect; it produces in the nation two independent parties, who consider each other as enemies, and acknowledge no common judge. Those two parties, therefore, must necessarily be considered as thenceforward constituting, at least for a time, two separate bodies, two distinct societies. . . . On earth they have no common superior. They stand, therefore, in precisely the same predicament as two nations who engage in a contest, and, being unable to come to an agreement, have recourse to arms. This being the case, it is very evident that the common laws of war — those maxims of humanity, moderation, and honor, which we have already detailed in the course of this work — ought to be observed by both parties in every civil war. For the same reasons which render the observance of those maxims a matter of obligation between State and State, it becomes equally and even more necessary in the unhappy circumstance of two incensed parties lacerating their common country." Vattel, Law of Nations, p. 425. All that Vattel means by this language is, that in a civil war the contending parties have a right to claim the enforcement of the same rules which govern the conduct of armies in wars between independent nations, — rules intended to mitigate the cruelties which would attend mutual reprisals and retaliations. He has no reference to the exercise of legislative power by either belligerent in furtherance of its cause. The validity of such legislation depends not upon the existence of hostilities, but upon the ultimate success of the party by which it is adopted.

It is unnecessary to pursue the subject further. Whatever *de facto* character may be ascribed to the Confederate government consists solely in the fact, that it maintained a contest with the United States for nearly four years, and dominated for that period over a large extent of territory. When its military

forces were overthrown, it utterly perished, and with it all its enactments. Whilst it existed, it was regarded, as said in *Thorington* v. *Smith*, "as simply the military representative of the insurrection against the authority of the United States." 8 Wall. 1; *Keppel's Adm'rs* v. *Petersburg Railroad Co.*, Chase's Decisions, 167.

Whilst thus holding that there was no validity in any legislation of the Confederate States which this court can recognize, it is proper to observe that the legislation of the States stands on very different grounds. The same general form of government, the same general laws for the administration of justice and the protection of private rights, which had existed in the States prior to the rebellion, remained during its continuance and afterwards. As far as the acts of the States did not impair, or tend to impair, the supremacy of the national authority, or the just rights of citizens under the Constitution, they are, in general, to be treated as valid and binding. As we said in *Horn* v. *Lockhart* (17 Wall. 570): "The existence of a state of insurrection and war did not loosen the bonds of society, or do away with civil government or the regular administration of the laws. Order was to be preserved, police regulations maintained, crime prosecuted, property protected, contracts enforced, marriages celebrated, estates settled, and the transfer and descent of property regulated, precisely as in time of peace. No one, that we are aware of, seriously questions the validity of judicial or legislative acts in the insurrectionary States touching these and kindred subjects, where they were not hostile in their purpose or mode of enforcement to the authority of the national government, and did not impair the rights of citizens under the Constitution." The same doctrine has been asserted in numerous other cases.

It follows from the views expressed that the State court erred in overruling the demurrers to the special pleas. Those demurrers should have been sustained, and the plaintiffs should have had judgment upon the agreed statement of facts for the amount of their claim, with interest from its maturity, deducting in the computation of time the period between the 27th of April, 1861, at which date the war is considered to have commenced in Virginia, and the 2d of April, 1866, when it is

deemed to have closed in that State. *The Protector*, 12 Wall. 700; *Brown* v. *Hiatts*, 15 id. 177.

The action of the Court of Appeals of Virginia in refusing a *supersedeas* of the judgment of the Circuit Court must, therefore, be reversed, and the cause remanded for further proceedings in accordance with this opinion; and it is

So ordered.

DEWING v. PERDICARIES.

1. All acts done in aid of the rebellion were illegal and void.
2. Pursuant to a statute of the Confederate States, and to an order of the Confederate District Court for the District of South Carolina, certain shares of the stock of a corporation of that State were, upon the ground that the owners of them were alien enemies, sequestrated and sold in 1862 at public auction; and the company was required to erase from its stock-books the names of such owners, insert those of the purchasers, and issue stock certificates to them. All dividends thereafter from time to time declared were paid to the purchasers, against whom, or their assignees, and the company, this bill was filed by an original stockholder, praying for a decree that the certificates so issued be cancelled as null and void, and the defendants enjoined from selling them, bringing suits to effect the transfer thereof, or collect dividends thereon, and the company from allowing such transfers, issuing new certificates for the same, or paying such dividends. The court decreed accordingly. *Held*, 1. That the order of sequestration, the sale, the transfer on the stock-books of the company, and the new certificates, were void, giving no right to the purchasers or to their assignees, and taking none from the original owners. 2. That the bill was well brought, and the corporation a proper party defendant. 3. That the purchasers, or their assignees, have no claim against the company for indemnity; but if, under the circumstances, entitled to any redress, they must seek it by suit against the parties by whom they claim to have been defrauded.

APPEAL from the Circuit Court of the United States for the District of South Carolina.

The facts are stated in the opinion of the court.

Mr. Philip Phillips and *Mr. Edward McCrady* for the appellants.

Mr. H. E. Young and *Mr. W. D. Porter*, *contra.*

MR. JUSTICE SWAYNE delivered the opinion of the court.

There is no controversy about the material facts of this case.

At the beginning of the late civil war, the Charleston Gas-

light Company was a body politic and corporate of the city of Charleston, in the State of South Carolina. Its capital stock consisted of thirty thousand six hundred and sixty-four shares of $25 each. A part of the stock was held by citizens of other states. Pursuant to a statute of the Confederate States, and an order of the Confederate District Court for the District of South Carolina, three thousand seven hundred and seventy-six shares were sequestrated, and sold at public auction on the 11th of April, 1862, for the alleged reason that they belonged to "alien enemies." Of this stock the complainant owned thirteen hundred and fifty-one shares. The defendants, except the gas company, were purchasers at this sale, or are the assignees of such purchasers. The Confederate authorities required the company to erase from its stock-book the names of the loyal owners, to insert those of the purchasers, and to issue stock certificates to the latter; all which was accordingly done. Dividends were declared from time to time, and paid to those parties or their assignees. The company acted under duress. The slightest resistance or hesitation would not have been tolerated by the Confederate authorities.

In February, 1865, the military forces of the United States captured the city of Charleston, and seized all the property and effects of the gas company. The president of the company was relieved from his duties, and ordered to deliver all the records of the company to a lieutenant of the army, who was appointed to succeed him. In May, 1866, the property of the company which had been seized was restored to it. The conditions of the restoration were that the company should erase from its books the names of those who bought the sequestrated stock and of the assignees, and replace the names of the prior stockholders, and also pay to the latter the amount of the dividends declared upon the stock since January, 1861. These requirements were fully complied with by the company.

The bill was filed by Perdicaries for himself and such other stockholders in the same situation as might choose to come in and contribute to the expenses of the litigation. The stock certificates of the original holders, and those of the purchasers or their assignees, are still outstanding.

The complainant prays that the sale may be vacated; that

the certificates still outstanding issued to the purchasers and their assignees may be declared invalid, and ordered to be delivered up and cancelled; that the claimants may be enjoined from transferring or selling the shares, and from bringing suits to effect such transfers, or for dividends; and that the company be enjoined from allowing such transfers, from issuing new certificates, and from paying dividends on the shares to those parties.

Subsequently, an amended bill was filed. It alleged that some of the defendants had commenced actions on the case against the company, alleging that it had issued the certificates fraudulently, and that it was bound to make them good, or to indemnify the holders. It was prayed that all the parties be enjoined from prosecuting or instituting such suits, and that their rights should be finally settled in this suit. There was a decree for the complainants, whereupon the defendants brought the case here.

Nothing is better settled in the jurisprudence of this court than that all acts done in aid of the rebellion were illegal and of no validity. The principle has become axiomatic. It would be a mere waste of time to linger upon the point for the purpose of discussing it. *Texas* v. *White*, 7 Wall. 700; *Hickman* v. *Jones*, 9 id. 197; *Hanauer* v. *Doane*, 12 id. 342; *Knox* v. *Lee*, id. 457; *Hanauer* v. *Woodruff*, 15 id. 439; *Cornet* v. *Williams*, 20 id. 226; *Sprott* v. *United States*, id. 459.

The transactions here in question were clearly within the category thus denounced. The order of sequestration, the sale, the transfer, and the new certificates, were all utterly void. They gave no rights to the purchasers, and took none from the loyal owners. In the view of the law, the rightful relations of both to the property were just the same afterwards that they had been before. The purchasers had not then, and they have not now, a scintilla of title to the stock.

The transferees can be no better off than their vendors. This is necessarily so, for several reasons.

A thing void as to all persons, and for all purposes, can derive no strength from confirmation. 13 Comyns, Dig., tit. Confirmation, D. 1, 4, pp. 144, 145; *Blessing* v. *House's Lessee*, 8 Gill & J. (Md.) 290.

It is a *caput mortuum*, and nothing can give it vitality. The assignor could give no title to his assignee, when he had none himself.

The stock of such corporations may be held by a valid title without a certificate. The certificate is only one of the *indicia* of title. The right to the stock is in the nature of a non-negotiable chose in action. Angell & A. on Corp., sect. 560. The assignee takes it subject to all the equities which existed against it in the hands of the assignor. *Mechanics' Bank* v. *The New York & New Haven Railroad Co.*, 13 N. Y. 599. Such is the rule applied to all choses in action not having the element of negotiability. *National Bank of Washington* v. *Texas*, 20 Wall. 72.

Even where a negotiable note is void *ab initio*, because made so by statute, or by public policy on account of the consideration, or is so by reason of the incapacity of the maker, it can no more be enforced against the maker by a *bona fide* holder than by the payee. It is alike void in the hands of both. 1 Parsons, Bills and Notes (ed. 1873), pp. 276, 277.

It is needless to pursue the subject further. The assignors and assignees occupy exactly the same ground. Neither has any right or title to the stock in question.

The suit was well brought by the complainant. The capital stock and all the other property and effects of a corporation are a trust fund. The corporation owns and holds them as a trustee. The shares are a distinct and separate property. This subject was fully considered in *Farrington* v. *Tennessee*, 95 U. S. 679. What was there said need not be repeated. Where a cause of action affects the entire interests of a corporation as such, the corporation is the proper party to sue. Where it affects specially a stockholder, he has the same right to sue *pro interesse suo* as any one else. In the latter case, it may or may not be necessary to make the corporation a party. As between the complainant and the party who bought his stock at the pretended sale, the conflict was primarily between them. The question was one of *meum* and *tuum*. But the shares represented aliquot parts of the trust fund. It was, therefore, proper that the corporation, as the trustee of that fund, should be brought before the court, that it might have

effectual notice of the litigation, and be bound by the results. The corporation, as the owner and representative of the trust fund, had, however, an interest of its own to be litigated. So far as the prior and the latter holders of the stock were concerned, it might have made them parties, and had their rights settled by a bill of interpleader. There were also questions affecting all the stockholders alike. They were, (1) whether both sets of claimants could not hold the stock claimed by them respectively, and the aggregate of the capital stock be so much increased; (2) whether the corporation, by reason of the conduct of its officers, was or was not bound to indemnify the purchasers or their assignees, if they lost the stock which they claimed to own; and (3) whether dividends should be paid to both sets of claimants, and, if not, to whom such payments should be made. In such a proceeding the original owners of the confiscated stock must have been made parties. This would have brought the same questions before the court as are now presented for consideration. The liberality and flexibility of the doctrines and practice of courts of equity are such that this could as well be done in this case as in a separate and independent proceeding instituted by the corporation. The complainant had a clear right, on account of the cloud cast upon his title, and of the injury otherwise special to himself, of which he complained, to be heard upon his bills. The entire subject and the necessary parties being before the court, and the court having jurisdiction for one purpose, might well take and exercise it as to every thing involved in the controversy. This saved time, expense, circuity of proceedings, perhaps a multiplicity of suits, and promoted the ends of justice. There is clearly no misjoinder or multifariousness in the bill.

There are cases in which a corporation having refused to do its duty by suing to avert a threatened wrong, a stockholder was permitted to intervene in its stead, making the corporation a party. *Dodge* v. *Woolsey* (18 How. 331) is one of this kind. Cases are more numerous where the directors having made themselves personally liable for neglect or breach of duty, and the corporation refusing to proceed against them, a stockholder has been permitted to sue in its behalf. In such cases, the cor-

poration is an indispensable party. The refusal must be made distinctly to appear; and the avails of the litigation, if there be any, go to the corporation, and are a part of its means, as if it had itself sued and recovered. See *Hodges* v. *New England Screw Co.*, 1 R. I. 312; *Foss* v. *Harbottle*, 2 Hare, 461; *Hersey* v. *Veazie*, 24 Me. 1; *Cunningham* v. *Pell*, 5 Paige (N. Y.), 607; *Smith* v. *Hurd*, 12 Metc. (Mass.) 371; *Austin, Receiver*, v. *Daniels*, 4 Den. (N. Y.) 299. But this bill does not belong to either of these classes. It is founded upon the wrong and injury special to the complainant; but it happens that his case and that of the corporation, if the latter had sued, would depend upon the same considerations, and that the decision of either would decide the other, except, perhaps, as to a single point, in regard to which we entertain no doubt. That point is the claim of a part of the appellants for indemnity from the company. To this, aside from the state of the pleadings, there are fatal objections. If they are paid by the company, they must be paid in part out of the money of the loyal men who have been wronged and forced into this litigation for the vindication of their rights. A court of equity cannot be expected to entertain such a proposition. If those who make the claim are, under the circumstances of this case, entitled to any remedy, it must be sought against the parties personally by whom they say they were defrauded. *The Western Bank of Scotland* v. *Addie*, Law Rep. 1 Scotch App. 145. That question would be alien to those arising and proper to be decided in this case. The litigation as to that subject would be multifarious.

The rights and claims of all the parties before us, as respects both the corporation and the original stockholders, may therefore well be disposed of in this case.

We think the decree of the Circuit Court is right; and it is

Affirmed.

GOLD-WASHING AND WATER COMPANY v. KEYES.

1. A petition for the removal of a suit from a State court to a Federal court is insufficient, unless it sets forth in due form, such as is required in good pleading, the essential facts not otherwise appearing in the case, which, under the act of Congress, are conditions precedent to the change of jurisdiction.
2. A suit cannot be so removed, under the second section of the act of March 3, 1875 (18 Stat. 470), simply because, in its progress, a construction of the Constitution or a law of the United States may be necessary, unless it, in part at least, arises out of a controversy in regard to the operation and effect of some provision in that Constitution or law upon the facts involved.
3. As important questions of practice are likely to arise under that act, this decision is to be considered as conclusive only upon the question directly involved and decided.

ERROR to the Circuit Court of the United States for the District of California.

This was a suit in the nature of a bill in equity, commenced July 29, 1876, in a State court of California, by Keyes, the owner of certain agricultural lands situated on Bear River, against the Little York Gold-Washing and Water Company, and others, the plaintiffs in error, who were engaged in hydraulic mining upon the highlands adjacent to that river and its tributaries, to restrain them from depositing the tailings and debris from their several mines in the channel of the river. The defendants demurred to the complaint; and, before the term at which the cause could be first tried, filed their petition, accompanied by the necessary bond, for the removal of the suit to the Circuit Court of the United States for the District of California, under the provisions of the act of March 3, 1875 (18 Stat. 470). The material parts of the petition, which was otherwise in due form, are as follows: —

"Your petitioners further represent that they are the owners of certain extensive and valuable gold-bearing placer mines, situated in the counties of Placer and Nevada, in said State of California, which they claim under the laws of the United States, and are engaged in working the same by what is known as the hydraulic process of mining; that said hydraulic process necessarily requires the employment of large heads or streams of water, used through pipes or hose, under heavy pressure, for the purpose of loosening or washing the gold-bearing earth and gravel contained in said mining

claims into large flumes, where the gold is separated from the earth by the action of the water, and is retained. That the gold in said claim is distributed in very fine particles throughout the entire gravel deposit, and cannot be obtained in any other manner, nor can said mining claims of your petitioners be worked in any other manner save by said hydraulic process; that in working said mines your petitioners necessarily deposit in the channels of the Bear River and its tributaries large quantities of tailings from said mines; that the said Bear River and its tributaries are the natural and only outlets for said hydraulic gold-mines; and your petitioners claim the right to work, use, and operate said mines, and, in so doing, to use the channels of Bear River and its tributaries as a place of deposit for their said tailings, under the provisions of the act of Congress of the United States, entitled 'An Act granting the right of way to ditch and canal owners over the public lands, and for other purposes,' passed July 26, 1866, and the act amendatory thereof, passed July 9, 1870, and the 'Act to promote the development of the mining resources of the United States,' passed May 10, 1872, and other laws of the United States.

"That said action arises under, and that its determination will necessarily involve and require the construction of, the laws of the United States above mentioned, as well as the pre-emption laws of the United States. That the mines of your petitioners are of great value, to wit, of an aggregate value of not less than ten millions of dollars; and that if your petitioners are prevented from using the said channels of Bear River and its tributaries as outlets for their said tailings and water, their said mines will be thereby rendered wholly valueless."

The State court accepted the petition and bond, and transferred the suit; but the Circuit Court remanded it, on the ground that no real or substantial controversy, properly within the jurisdiction of that court, appeared to be involved. To obtain a review of this action of the Circuit Court, the present writ of error has been brought, under the provision of sect. 5 of the act of 1875, which gives authority for that purpose.

Mr. S. M. Wilson for the plaintiffs in error.

Although the construction of the act of March 3, 1875 (18 Stat. 470), under which the removal of this cause was ordered, has not been judicially settled, the sixth article of the Constitution, which differs from it only in not limiting the jurisdiction

of the courts of the United States to cases of a civil nature, has been the subject of repeated decisions. *Martin* v. *Hunter's Lessee*, 1 Wheat. 304; *Cohens* v. *Virginia*, 6 id. 264; *Osborne et al.* v. *The Bank of the United States*, 9 id. 738. And the case at bar seems to be within their principles.

Another argument in favor of the jurisdiction of the Circuit Court is found in the fact that, if the case should proceed in the State court, it may eventually be brought here by the defendants, should a decision adverse to their rights under the acts of Congress be rendered. *Delmas* v. *Insurance Company*, 14 Wall. 661; *Hall* v. *Jordan*, 15 id. 393; *Crapo* v. *Kelly*, 16 id. 610.

Mr. Montgomery Blair, contra.

MR. CHIEF JUSTICE WAITE delivered the opinion of the court.

It is well settled that in the courts of the United States the special facts necessary for jurisdiction must in some form appear in the record of every suit, and that the right of removal from the State courts to the United States courts is statutory. A suit commenced in a State court must remain there until cause is shown under some act of Congress for its transfer. The record in the State court, which includes the petition for removal, should be in such a condition when the removal takes place as to show jurisdiction in the court to which it goes. If it is not, and the omission is not afterwards supplied, the suit must be remanded.

The attempt to transfer this cause was made under that part of sect. 2 of the act of 1875 which provides for the removal of suits "arising under the Constitution or laws of the United States." In the language of Chief Justice Marshall, a case "may truly be said to arise under the Constitution or a law of the United States whenever its correct decision depends upon the construction of either" (*Cohens* v. *Virginia*, 6 Wheat. 379); or when "the title or right set up by the party may be defeated by one construction of the Constitution or law of the United States, or sustained by the opposite construction" (*Osborne* v. *Bank of the United States*, 9 id. 822).

The question of jurisdiction was submitted to the Circuit Court, upon the record sent from the State court. Upon the

pleadings alone, it is clear the defendants had not brought themselves within the statute. The complaint simply set forth the ownership by Keyes of his property, and the acts of the defendants which, it was claimed, created a private nuisance. No rights were asserted under the Constitution or laws of the United States, and nothing was stated from which it could in any manner be inferred that the defendants sought to justify the acts complained of by reason of any such authority. The defendants, in their demurrer, which set forth specifically the grounds relied upon, presented no question of Federal law. The validity of the judgment of the Circuit Court, therefore, depends upon the sufficiency of the facts set forth in the petition for removal.

For the purposes of the transfer of a cause, the petition for removal, which the statute requires, performs the office of pleading. Upon its statements, in connection with the other parts of the record, the courts must act in declaring the law upon the question it presents. It should, therefore, set forth the essential facts, not otherwise appearing in the case, which the law has made conditions precedent to the change of jurisdiction. If it fails in this, it is defective in substance, and must be treated accordingly. Thus, in *Insurance Company* v. *Pechner* (95 U. S. 183), we decided that a petition for removal, on account of the citizenship of the parties, did not divest the State court of its power to proceed; because, when taken in connection with the pleadings and process in the cause, it failed to show such citizenship at the time of the commencement of the action as would give the Circuit Court jurisdiction. And in *Amory* v. *Amory* (id. 186) we held to the same effect in reference to a petition which failed to set forth the personal citizenship of the parties.

The office of pleading is to state facts, not conclusions of law. It is the duty of the court to declare the conclusions, and of the parties to state the premises.

In this petition, the defendants set forth their ownership, by title derived under the laws of the United States, of certain valuable mines that can only be worked by the hydraulic process, which necessarily requires the use of the channels of the river and its tributaries in the manner complained of; and they allege that they claim the right to this use under the provisions

of certain specified acts of Congress. They also allege that the action arises under, and that its determination will necessarily involve and require the construction of, the laws of the United States specifically enumerated, as well as the pre-emption laws. They state no facts to show the right they claim, or to enable the court to see whether it necessarily depends upon the construction of the statutes.

Certainly, an answer or plea, containing only the statements of the petition, would not be sufficient for the presentation of a defence to the action under the provisions of the statutes relied upon. The immunities of the statutes are, in effect, conclusions of law from the existence of particular facts. Protection is not afforded to all under all circumstances. In pleading the statute, therefore, the facts must be stated which call it into operation. The averment that it is in operation will not be enough; for that is the precise question the court is called upon to determine.

The statutes referred to contain many provisions; but the particular provision relied upon is nowhere indicated. A cause cannot be removed from a State court simply because, in the progress of the litigation, it may become necessary to give a construction to the Constitution or laws of the United States. The decision of the case must depend upon that construction. The suit must, in part at least, arise out of a controversy between the parties in regard to the operation and effect of the Constitution or laws upon the facts involved. That this was the intention of Congress is apparent from sect. 5 of the act of 1875, which requires the Circuit Court to dismiss the cause, or remand it to the State court, if it shall appear, "at any time after such suit has been brought or removed thereto, that such suit does not really or substantially involve a dispute or controversy properly within the jurisdiction of said Circuit Court."

Before, therefore, a circuit court can be required to retain a cause under this jurisdiction, it must in some form appear upon the record, by a statement of facts, "in legal and logical form," such as is required in good pleading (1 Chit. Pl. 213), that the suit is one which "really and substantially involves a dispute or controversy" as to a right which depends upon the con-

struction or effect of the Constitution, or some law or treaty of the United States. If these facts sufficiently appear in the pleadings, the petition for removal need not restate them; but, if they do not, the omission must be supplied in some form, either by the petition or otherwise. Under the application of this rule, we think that the record in this case is insufficient, and that the Circuit Court did not err in remanding the cause.

The act of 1875 has made some radical changes in the law regulating removals. Important questions of practice are likely to arise under it, which, until the statute has been longer in operation, it will not be easy to decide in advance. For the present, therefore, we think it best to confine ourselves to the determination of the precise question presented in any particular case, and not to anticipate any that may arise in the future. Under these circumstances, the present case is not to be considered as conclusive upon any question except the one directly involved and decided.

Judgment affirmed.

MR. JUSTICE BRADLEY, dissenting.

The question intended to be raised in this case is, whether the grants made by the United States of placer mines, as such, involve the right to discharge the refuse earth and gravel produced by working said mines, called "tailings," into the neighboring streams, in this case Bear River, inasmuch as the mines cannot be worked except by means of a discharge of the streams of water loaded with such refuse. This question depends upon the construction of the titles given by the United States. When the government determined to sell mining property as such, and placer mines *eo nomine*, did it, or did it not, intend to confer a right of working them in the only way in which they could be worked? It seems to me that the question is clearly raised by the allegations of the petition in this case; and the claim of the right is clearly made. Whether it can be maintained as against the occupants of inferior lands in the valleys which may be injured thereby is another question, not now before us. I think the parties were entitled to a removal of the cause.

COUNTY COMMISSIONERS v. CHANDLER.

1. A bridge intended for and used as a thoroughfare is a public highway, and hence a work of internal improvement, within the meaning of the act of Nebraska passed Feb. 15, 1869, authorizing cities, counties, and precincts in that State to issue bonds in aid of works of internal improvement.
2. The fact that the bridge, in aid of the construction of which the bonds were issued, was built as a toll-bridge, and is used as such, does not affect their validity in the hands of a *bona fide* holder for value before maturity.

ERROR to the Circuit Court of the United States for the Northern District of Nebraska.

This was an action brought by George B. Chandler to recover the amount of certain coupons attached to certain bonds issued by the board of county commissioners of the county of Dodge, in the State of Nebraska, on behalf of the precinct of Fremont in said county. Chandler purchased the coupons sued on before maturity, and for a valuable consideration. The controversy in the case relates to the validity of the bonds and his title to the coupons.

By a law of the State of Nebraska, passed Feb. 15, 1869, it was enacted that any county or city in the State should be authorized to issue bonds to aid in the construction of any railroad or other work of internal improvement, the amount to be determined by the county commissioners of such county or the city council of such city, not exceeding ten per cent of the assessed valuation of all taxable property in said county or city: *Provided*, the county commissioners or city council should first submit the question of issuing such bonds to a vote of the legal voters of said county or city in the manner provided by chap. 9 of the Revised Statutes of Nebraska for submitting to the people of a county the question of borrowing money. By a subsequent section, it was enacted that any precinct in any organized county of the State should have the privilege of voting to aid works of internal improvement, and be entitled to all the privileges conferred upon counties and cities; and that in such cases the precinct election should be governed in the same manner, so far as applicable, and the county commissioners should issue special bonds for the precinct.

It thus appears that the board of county commissioners had sufficient power to issue bonds for the precinct, if authorized and required so to do by the latter, for the purpose of aiding works of internal improvement.

In the present case, the bonds purport on their face to have been thus issued. The following is a copy of one of them: —

'UNITED STATES OF AMERICA,
"STATE OF NEBRASKA.

"It is hereby certified that Fremont Precinct, in the county of Dodge, in the State of Nebraska, is indebted unto the bearer in the sum of $1,000, payable on or before twenty years after date, with interest at the rate of ten per cent per annum from date. Interest payable annually on the presentation of the proper coupons hereto annexed. Principal payable at the office of the county treasurer, in Fremont, Dodge County, Nebraska. Interest payable at the Ocean National Bank, in the city of New York.

"This bond is one of a series issued in pursuance of and in accordance with a vote of the electors of said Fremont Precinct, at a special election held on the eleventh day of November, A.D. 1870, at which time the following proposition was submitted: —

"'Shall the county commissioners of Dodge County, Nebraska, issue their special bonds on Fremont Precinct, in said county, to the amount not to exceed $50,000, to be expended and appropriated by the county commissioners, or as much thereof as is necessary, in building a wagon-bridge across the Platte River, in said precinct; said bonds to be made payable on or before twenty years after date, bearing interest at the rate of ten per cent per annum, payable annually; which proposition was duly elected, adopted, and accepted by a majority of the electors of said precinct voting in favor of the proposition.'

"And whereas the Smith Bridge Company of Toledo, Ohio, have entered into a contract with said county commissioners to furnish the necessary materials and to build and construct said bridge referred to in the foregoing proposition; therefore, this bond with others is issued in pursuance thereof, as well as under provisions of an act of the legislature of the State of Nebraska, approved Feb. 15, A.D. 1869, entitled 'An Act to enable counties, cities, and precincts to borrow moneys on their bonds, or to issue bonds to aid in the construction or completion of works of internal improvements in this State, and to legalize bonds already issued for such purposes.'

"In witness whereof, we, the said county commissioners of said Dodge County, have hereunto set our hands, this first day of September, A.D. 1871."

[Signed and sealed by the county commissioners.]

It is conceded that the precinct regularly voted for an issue of bonds to the amount named therein, to be appropriated for building a bridge across the Platte River; but the defendant, in its answer, set forth the notice of the election, by which it appears that the proposition submitted to the people was to build a toll-bridge and not a free bridge; and that the bridge was accordingly built and operated as a toll-bridge. The notice of election further declared that the tolls were to be used for the purpose of raising a sinking fund to pay the principal, interest, repairs, and expenses of the bridge, and were to be regulated from time to time by the county commissioners.

The plaintiff demurred to this answer. The demurrer was sustained, and judgment rendered in his favor. In the argument below, three questions were raised, on which the judges were divided in opinion; and it is on this division of opinion that the case comes here. The questions were as follows: —

1. Whether the said answer sets up a sufficient defence in law to the causes of action stated in the petition.

2. Whether the recital in the bond charged the holder thereof with notice of the proposition, which was in fact the one submitted to a vote of the people, as contained in and shown by the records of the county.

3. Whether the fact that the bonds were issued for a toll-bridge of the character of the one set forth in the proposition submitted to the votes of said Fremont Precinct, as shown in the answer, makes them invalid in the hands of the holder thereof for value before due, without other notice than that imparted on the face of the bonds.

Mr. W. A. Marlow for the plaintiffs in error.

Mr. W. H. Munger, *contra*.

MR. JUSTICE BRADLEY, after stating the case, delivered the opinion of the court.

In approaching the solution of the questions presented by this certificate, the first inquiry that naturally presents itself is,

whether a toll-bridge like that referred to is a public bridge, and hence a work of internal improvement. And we can hardly refrain from expressing surprise that there should be any doubt on the subject. What was the bridge built for, if not fit for public use? Certainly not for the mere purpose of spanning the Platte River as an architectural ornament, however beautiful it may be as a work of art; nor for the private use of the common council and their families; nor even for the exclusive use of the citizens of Fremont. All persons, of whatever place, condition, or quality, are entitled to use it as a public thoroughfare for crossing the river. The fact that they are required to pay toll for its use does not affect the question in the slightest degree. Turnpikes are public highways, notwithstanding the exaction of toll for passing on them. Railroads are public highways, and are the only works of internal improvement specially named in the act; yet no one can travel on them without paying toll. Railroads, turnpikes, bridges, ferries, are all things of public concern, and the right to erect them is a public right. If it be conceded to a private individual or corporation, it is conceded as a public franchise; and the right to take toll is granted as a compensation for erecting the work and relieving the public treasury from the burden thereof. Those who have such franchises are agents of the public. They have, it is true, a private interest in the tolls; but the works are public, and subject to public regulation, and the entire public has the right to use them. These principles are so elementary in the common law, that we can hardly open our books without seeing them recognized or illustrated. Comyns's Digest, title "Toll-thorough," commences thus: "Toll-thorough is a sum demanded for a passage through an highway; or, for a passage over a ferry, bridge, &c.; or, for goods which pass by such a port in a river: and it may be demanded in consideration of the repair of the pavement in a high street; or, of the repair of a sea-wall, bridge, &c.; cleansing of a river, &c. But toll-thorough cannot be claimed simply, without any consideration." These few sentences indicate conclusively that the existence of a toll is not inconsistent with the public character of the work on which it is exacted.

Of course, there may be private bridges as there may be pri-

vate ways, and they are put in the same category by the text-writers. Woolrych on Ways, 195. But all bridges intended and used as thoroughfares are public highways, whether subject to toll or not. Regularly, all public bridges are a county charge, and the county is bound to erect and maintain them. 1 Bla. Com. 357. But others may be charged with this duty, and a toll is the commonest of means for obtaining compensation for its performance. In Angell on Highways, it is said that public bridges may be divided into three classes: "First, those which belong to the public, as State, county, or township bridges, over which all people have a right to pass, without or with paying toll; these are built by public authority at the public expense, either of the State itself, or of a district or portion of the State; secondly, those which have been built by companies (like turnpike and railroad companies) or at the expense of private individuals, over which all persons have a right to pass on the payment of a toll fixed by law; thirdly, those which have been built by private individuals, and which have been surrendered or dedicated to the use of the public." Angell on Highways, sect. 38. Chancellor Kent says: "The privilege of making a road or establishing a ferry, and taking tolls for the use of the same, is a franchise, and the public have an interest in the same; and the owners of the franchise are answerable in damages if they should refuse to transport an individual without any reasonable excuse, upon being paid or tendered the usual rate of fare." In the same connection, he enumerates in this class of franchises ferries, bridges, turnpikes, and railroads. 3 Kent, Com. 458, 459.

But it is unnecessary to continue the discussion further. In our judgment, the bridge in question is a public bridge, and a work of internal improvement within the meaning of the statute.

Whether the precinct or the county commissioners have the right, without further legislative authority, to demand tolls for passing on the bridge is a totally different question, and one that does not, in our judgment, affect the validity of the bonds. The bridge being an internal improvement, the precinct had the power to aid in its construction. This it resolved to do, and on this resolve is founded the issue of the bonds. Whether

it should get any consideration from the public in return was a question in which the purchaser of the bond is not concerned. A resolve to make the bridge a toll-bridge was an incidental matter, that might or might not be valid, and might or might not be carried out, if valid, without affecting the main purpose, — the construction of the bridge, or the bonds issued in aid of its accomplishment. The toll question was an incidental one, in which the precinct alone was beneficially interested. If in the execution of their power to aid in the construction of the bridge the people of the precinct proposed to get some return in the shape of tolls, and should find that they had no authority to exact them, how can that affect their bonds, to issue which their power was undoubted? In voting the bonds, they may have acted, and undoubtedly did act, under the expectation that the proposed tolls would relieve them from some taxation for their payment; but, if mistaken in this, — that is, in their power to exact tolls, — how can this affect the bonds? And how can their want of power to exact tolls concern the purchaser of the bonds? The truth is, the two things — the power to aid in the construction of the bridge, and the power to stipulate for tolls thereon — are distinct; and in that light they should be viewed on the question of the validity of the bonds. The bridge is an accomplished fact, a public improvement, of which the public and the people of Fremont have the benefit; and its erection is due to those who advanced their money on the bonds. There are some equities in the case that ought not to be entirely ignored in considering, not the powers of the precinct, but the manner in which it has attempted to exercise them. If any party is to suffer from a mistake of law in respect to the power of exacting tolls, equity and justice require that it should be that party which has received the benefit, and not the party that advanced the consideration. This principle should always govern when it involves no violation of any rule of law.

We deem it unnecessary to advert to other points made in the argument. They present nothing that requires distinct consideration.

On the whole, we are of opinion that the answer does not set up a sufficient defence in law to the cause of action stated in

the petition, whether the plaintiff had notice of the election proceedings and of the character of the proposed bridge or not before purchasing the coupons on which the suit is brought.

This conclusion requires, and our judgment is, that the first and third questions should be answered in the negative, and that the second question is immaterial; and, consequently, that the judgment of the Circuit Court should be affirmed.

Judgment affirmed.

UNITED STATES v. COUNTY OF CLARK.

A county subscribed for stock of a railroad corporation, and issued bonds in payment therefor, pursuant to a law which authorized a levy of a special tax to pay them, "not to exceed one-twentieth of one per cent upon the assessed value of taxable property for each year," but contained no provision that only the fund so derived should be applied to their payment. *Held*, that the bonds are debts of the county as fully as any other of its liabilities, and that for any balance remaining due on account of principal or interest after the application thereto of the proceeds of such tax the holders of them are entitled to payment out of the general funds of the county.

ERROR to the Circuit Court of the United States for the Eastern District of Missouri.

On the fourth day of January, 1876, the United States, on the relation of William A. Johnston, filed in the court below a petition for a *mandamus* against the County Court of Clark County, Missouri, and the justices thereof.

The case exhibited by the pleadings is this: On the sixth day of June, 1874, said Johnston recovered a judgment in said Circuit Court against that county for $8,606.64 and costs. The judgment was for unpaid instalments of interest on bonds of the county, each for $500, issued on the first day of June, 1871, by order of the county court, in execution of a power conferred by the charter of the Missouri & Mississippi Railroad Company. The whole issue under the order was $200,000, and the judgment was for interest upon one-fourth of the amount. An execution having been issued upon the judgment, and a return made that no property could be found, he applied for a *mandamus* requiring the county court and the justices thereof to direct

the clerk of the county to draw a warrant on the county treasurer for the balance of the judgment remaining unpaid, so that he might be enabled, on its presentation, to have it paid in its order out of the county treasury. His right to such a warrant, and the duty of the county court to direct it to be drawn, are claimed to be founded upon the general statutes of the State. The act respecting the powers and duties of county courts (Wagner, Stat. 414, sect. 28) enacts as follows: "Each county court shall have power to audit, adjust, and settle all accounts to which the county shall be a party; to order the payment out of the county treasury of any sum of money found due by the county;" and the thirty-first section provides that, "when the court shall ascertain any sum of money to be due from the county, they shall order their clerk to issue a warrant therefor," drawn upon the county treasurer, prescribing the form. The thirty-second section requires every such warrant to be drawn for the whole amount ascertained to be due to the person entitled to the same; and by the eighth section of the act warrants are required to be paid in the order of their presentation.

Such, in the main, is the case made by the relator. The defendants concede the recovery of the judgment and the lawful issue of the bonds, but aver that the charter of said company expressly provided that the levy of a tax by the county court should not exceed one-twentieth of one per cent each year for the payment of the bonds and the interest thereon. They further aver that they have levied that tax; that they have no authority to provide any other revenue fund for the payment of the said bonds or interest, or any judgment thereon; that the relator is not entitled to have his judgment paid out of any other fund; that the fund is to be distributed proportionately among all the holders of the bonds of the $200,000 issue; that there is no fund in the treasury applicable to the bonds; and that they are not authorized to order a warrant for the relator's judgment payable out of any other fund than that derived from the tax of one-twentieth of one per cent authorized by that charter.

The provision of the charter mentioned in the pleadings is as follows: "It shall be lawful for the corporate authorities of any city or town, or the county court of any county, desiring so to

do, to subscribe to the capital stock of said company, and may issue bonds therefor, and levy a tax to pay the same not to exceed one-twentieth of one per cent upon the assessed value of taxable property for each year."

The statutes of the State make it the duty of the county court to levy taxes for county uses, not exceeding the rate of five mills, or one-half per cent. The tax of one-twentieth of one per cent is an authorized addition to this.

The United States demurred to the defence. The demurrer was sustained and the petition dismissed. This writ of error was then sued out.

Mr. George W. McCrary in support of the judgment below.

The county court is expressly restricted from levying more than one-twentieth of one per cent in any one year to pay the bonds and coupons in controversy, or any judgment thereon. Sect. 13 of the charter of the Missouri & Mississippi Railroad Company. Session Acts of Mo., 1865, p. 88; *Supervisors* v. *United States*, 18 Wall. 71; *State* v. *Shortridge et al.*, 56 Mo. 126.

The relator is not entitled to a warrant payable out of the ordinary revenues of the county, and the defendants below have no authority to direct its issue. The only fund applicable to the payment of his judgment is that derived from the special tax which the charter empowers the county court to levy.

The statute of Missouri (1 Wagner, Stat. 410 *et seq.*) provides that all warrants drawn upon the treasurer of the county shall state the fund out of which the same are to be paid, and prescribes a form for drawing them. If there be on hand no such fund as that mentioned in the warrants which are presented for payment, he makes on them an indorsement to that effect.

The law in force when the bonds were issued obviously requires that the different funds in the county treasury shall be faithfully and exclusively applied to the specific purposes for which they have been respectively collected. Notice was thus given that these securities were payable out of a special fund, in raising which the taxing power of the county court is expressly limited, and the holders of them must resort to that fund alone for payment.

Mr. James Grant, contra.

No question as to the validity of the bonds is raised. As they

are the obligations of the county, the holder of them is entitled to payment from its funds in the same manner as other parties whose claims are a general charge upon it.

The provision of the charter for the levy of a special tax was intended to give increased value in the market to the bonds, and furnish an additional security to the holder of them, but not to limit his right to the avails which that tax would produce.

MR. JUSTICE STRONG, after stating the case, delivered the opinion of the court.

The question presented by the record is, whether the relator is entitled to payment of his judgment out of the general funds of the county, so far as the special tax of one-twentieth of one per cent is insufficient to pay it. And we think that he is thus entitled is plain enough, unless the act which gave the county authority to issue the bonds directs otherwise. That act gave plenary authority to the county to subscribe to the capital stock of the railroad company and to issue bonds therefor, but imposed no limit upon the amount which it empowered a county to subscribe, and for the payment of which authority was given for the issue of county bonds. This was left to the discretion of the county court. So it has been held by the Supreme Court of the State. *State* v. *Shortridge et al.*, 56 Mo. 126. A limitation was, however, prescribed for the special tax which was allowed to be levied. But that was a special tax, distinct from and in addition to the ordinary tax which, by other statutes, the county court was authorized to levy; probably supposed to be made necessary by the new liabilities the county might assume. There is no provision in the act that the proceeds of the special tax alone shall be applied to the payment of the bonds. None is expressed, and none, we think, can fairly be implied. It is no uncommon thing in legislation to provide a particular fund as additional security for the payment of a debt. It has often been done by the States, and more than once by the Federal government. The act of Congress of Feb. 25, 1862 (12 Stat. 346), set apart the coin paid for duties on imported goods as a special fund for the payment of interest on the public debt and for the purchase of one per cent thereof for a sinking fund; yet no one ever thought the

obligation to pay the debt is limited by the amount of the duties collected. Limitations upon a special fund provided to aid in the payment of a debt are in no sense restrictions of the liability of the debtor. Why, then, must not the special tax of one-twentieth of one per cent be regarded as merely an additional provision made for the payment of the new debt authorized, rather than as a denial to the creditors of any resort to the ordinary sources from which payment of county debts is to be made? Why should such a provision be construed as placing the holders of the bonds in a worse situation than that of other creditors of the county? These bonds are a debt of the county as fully as is any other liability. Had the act which gave power to the county to issue them said nothing of any special tax, there could be no question that the holders of the bonds, like other creditors, would have a resort to the money in the county treasury collected for the discharge of its obligations; for it is by the law made the duty of the county court to order the payment out of the county treasury of any sum of money found by them to be due from the county. It would, therefore, have been the court's duty to direct its clerk to issue a warrant for payment, as in other cases. And surely it is not to be held, unless such a construction of the statute is absolutely necessary, that when the legislature authorized the county to incur the debt, it intended to deny to the creditor the right to look to the treasury of the county for its payment; in other words, that the debt was sanctioned, but that it was stripped of the usual incidents of a debt, and the debtor was relieved from attendant liabilities. And it is not to be inferred, from a provision giving the creditor the benefit of a special fund, that it was intended to place him in a worse position than that he would have occupied had no such provision been made. And that, too, in the absence of any direction that he must look exclusively to that fund. Such is not a reasonable construction of the statute. Such is not a fair implication of its purpose. It accords neither with its letter nor with its spirit. Yet it is for such an implication the defendants contend, and upon it their case wholly rests.

The bonds, as we have said, and as is conceded, are an authorized debt of the county. The purpose for which they were authorized is manifest. It was to furnish aid to the construc-

tion of a railroad in which the public, and especially the county of Clark, were thought to be interested. The bonds, it is to be presumed, were intended to be for sale in the market; and it was the obvious intent alike of the State, of the railroad company, and of the county that they should bring the highest price possible. For this reason, probably, the tax of one-twentieth of one per cent was authorized, with a view to give to them additional credit, to make them more salable, and to enable the railroad company or the county to obtain for them a larger price. Surely it could not have been to depreciate their value, and make them almost worthless in the market. It was said during the argument, and not denied, that the taxable property of the county is valued at $3,700,000. A tax of one-twentieth of one per cent upon that sum, taking no account of exonerations and failure to collect, would yield only $1,850, less than one-eighth of the annual interest of the debt authorized and incurred. It is incredible that the legislature intended to deny to the purchasers of the bonds any right to look for payment beyond such a meagre provision; or, if it was so intended, that the intention would not have been expressed in precise terms. In the absence of any express declaration that the creditor's right to claim payment shall not reach beyond the fund derived from the small special tax, we cannot think the legislature proposed rendering the bonds unsalable or almost worthless in the hands of those who might be so unfortunate as to hold them. Such an intention would have defeated the object sought to be secured by giving authority for their issue. Nor can we think that the legislature intended to set a trap for purchasers, and lead them to suppose they were obtaining valuable securities, when, in fact, they would obtain what was worth next to nothing. The statute justifies no implication of any such legislative intention. If it be said that the legislature, in limiting the special tax allowed, contemplated no issue of bonds beyond what one-twentieth of one per cent would pay, and did not anticipate the improvidence of purchasers who might buy bonds issued in excess of that sum, it may be answered, that still a larger issue was in fact authorized. Such an issue must, therefore, have been considered as possible. And it would be absurd to hold that the legislative intent was to allow the issue and

sale of county bonds for a sum more than one hundred times larger than the debt acknowledged by them to be due, and more than one hundred times larger than the purchasers would be entitled to recover.

We have been referred to the cases of *Supervisors* v. *United States* (18 Wall. 71) and *State* v. *Shortridge et al.* (*supra*), as sustaining the construction of the statute contended for by the defendants. In fact, however, they afford it no support. In the former of these cases, we held that a statute of the State of Iowa conferred no power to levy a specific tax to pay a judgment rendered against a county on warrants for ordinary county expenditures, and we asserted that a *mandamus* will not be awarded to compel county officers of a State to do any act which they are not authorized to do by the laws of the State from which they claim their powers. We adhere now to what we then decided. But we have in hand no such case. The present is not an attempt to enforce the levy of any special tax, or of any tax. It asserts no power in the county court to levy a tax, which the defendants deny they have. It claims only a right to share in the product of a tax confessedly authorized. We do not, therefore, perceive that the case has any applicability to the subject we have before us. And *State* v. *Shortridge et al.*, though claimed to be in point, is equally inapplicable, when it is observed what the case was and what was decided. It was a suit for a *mandamus* to compel the county court of Macon County to levy a tax for the payment of the principal and interest of several railroad bonds issued in payment of a subscription by the county to the capital stock of the Missouri & Mississippi Railroad Company. The bonds had been issued by virtue of a legislative act similar to that under which the bonds of the present relator were issued. The county had levied the special tax authorized by the act, and the application was for a *mandamus* to compel the levy of another tax specially for the payment of the bonds, in addition to that allowed; namely, that of one-twentieth of one per cent. The court refused the writ, holding that no other special tax was authorized by law than the one mentioned in the charter of the railroad company; and, as that had been levied, that there was no right to levy another. This was the only question before the court, and the

decision is authority only to the extent of the case before it. The court does not appear to have decided that the county court could not levy a general tax for the expenses and liabilities of the county. It was only called upon to consider how far an extraordinary or special tax could be levied. The case called for nothing more; and, if more was intended by the judge who delivered the opinion, it was purely *obiter*. In the present case, as already said, there is no effort to enforce the levy of any special tax.

Upon the whole, therefore, we think the relator is entitled to the *mandamus* for which he prays.

Judgment reversed, with instructions to give judgment on the demurrer to the return against the respondents.

MR. CHIEF JUSTICE WAITE, with whom concurred MR. JUSTICE MILLER and MR. JUSTICE BRADLEY, dissenting.

I am unable to concur in this judgment. I think the act under which the bonds were issued limited the power of taxation for their payment, and that the holders are chargeable with notice of the limitation. The debt authorized was one payable from a particular fund. If the fund is deficient, the legislature alone has the power to grant the necessary relief.

WERNER v. KING.

1. Form, when of the essence of an invention, is necessarily material; and, if it be inseparable from the successful operation of the machine, the attainment of the same object by a machine different in form is not an infringement.
2. The use by Robert Werner, under letters-patent No. 134,621, for crimping and fluting-machines, issued to him Jan. 7, 1873, of the detent, or finger, in combination with fluting-rollers to produce crinkles or puffings, is not an infringement of the double-plated semi-cylinder guides covered by reissued letters-patent No. 3000, granted to George E. King June 23, 1868.

APPEAL from the Circuit Court of the United States for the Southern District of New York.

This was a bill in chancery by George E. King against Robert Werner for the alleged infringement by the latter of two reissued letters-patent, No. 3000 and No. 3001, granted to

the complainant June 23, 1868, the first being for an improvement in fluting-machines. The schedule referred to in the letters-patents therefor, and making part of them, is as follows: —

" *To all whom it may concern:*

"Be it known that I, George Edwin King, of the city, county, and State of New York, have invented certain new and useful improvements in fluting-machines; and I do hereby declare that the following is a full, clear, and exact description of the same, reference being had to the accompanying drawings, making a part of this specification, in which —

"Fig. 1 is a front elevation of a fluting-machine constructed according to my invention.

"Fig. 2 is an end elevation of the same.

"Fig. 3 is a detached section representing a portion of the same.

"Fig. 4 is a plan view of a piece of the fluted puffing for the manufacture of which my invention is intended.

"Similar letters of reference indicate corresponding parts in all the figures.

"This invention is designed for making puffing applicable to shirt-bosoms, trimming, or other purposes of dress, in which the article, as it issues from the machine, is (without having recourse to laundering) delivered in a complete form, either singly or in two or more series or rows, composed of flattened borders, with flutes running along their inner edges, and puffed or crinkled surfaces between the flutes.

"The invention consists in a guide constructed with one or more curved or arched portions, in combination with one or more suitable fluting-rollers, whereby the material, in passing through the machine, is fluted and contracted laterally, as it were, or drawn up between the flutes to produce the required crinkled surface or surfaces in the puffing.

"To enable others to understand the construction and operation of my invention, I will proceed to describe it with reference to the drawings.

"A represents the frame which supports the working parts of the apparatus, and situated longitudinally, in the upper part of which are two fluting-rollers, B and C, which are situated one above the other, with their ends projecting through large vertical slots, *a*, formed in the ends of the frame, A; the roller, B, being supported

in semicircular bearings formed in the lower ends of the slots, *a*, and furnished at one end with a crank, *b*, and the upper roller, C, working in semicircular bearings, *c*, formed in sliding-blocks, *c*, placed upon the ends thereof, and pressed down upon the same by a spring, *d*, the tension of which may be regulated by means of a vertical screw, *e*, situated centrally in the top of the frame, A.

"When desired, the upper roller, C, may be held within a given distance of the lower roller by vertical set-screws, *f*, situated one at each end of the top of the aforesaid frame, A, and acting upon the sliding or adjustable bearings, *c*.

"The puffing is represented in Fig. 4, and is formed of strips of any suitable fabric, and of a width, when finished, nearly or quite equal to the length of the fluting-rollers, B C, and is formed with longitudinal portions, *g*, which are fluted transversely to the length of the strip aforesaid; also with portions, *h*, in which the fabric is pressed flat, and through which longitudinal rows of stitching are formed, to render permanent the conformation of the puffing; and also with portions, *l*, which are intended to be wider than the parts just described, and which are puffed or crinkled in such manner as to possess an irregular wavy surface.

"In order to form these several portions of the puffing, each of the flutting-rollers, B C, is formed with as many annular or circumferential series, A′, of grooves and flutes as there are fluted portions, *g*, upon the puffing, with as many narrow annular faces, B′, as there are flattened portions, *h*, and with as many comparatively broad portions, C′, as there are puffed portions, *i*, in the finished puffing; each of the said parts of the rollers being of the same width as that portion of the completed puffing which it is designed to shape, and the circumferential faces or portions, C′, being of such diameter, that, when the two rollers are in proper position, those upon one roller will be situated at such distance from those upon the other that no considerable pressure will be exerted upon the fabric in passing between them and the several series, A′, of grooves and flutes upon one roller gearing into those upon the other roller.

"D indicates pressers, the rearmost end of each one of which is curved downward, and fitted upon the upper rearmost part of each of the faces, B′, of the lower roller, B, with its forward end curved upward in contact with the forward sides of the corresponding face, B′, upon the other roller, as shown in Figs. 2 and 3, the aforesaid rearmost ends of these pressers, D, being pressed against the roller, B, by set-screws, *j*, passing through a horizontal bar or brace, *k*, secured upon the rear of the frame, A.

"Fixed upon the forward side of the frame, A, in front of the roller, B, is a horizontal supporting-brace, *m*, which has fixed upon it an inclined plate, *n*, upon which is supported the inclined guide, E, which is composed of two pieces of sheet metal, secured one over the other, at such a distance apart as to permit the passage of the cloth or fabric between them; and those parts of this guide, E, in front of the plain cylindrical portions, C′, of the rollers, are curved upward or arched transversely, as shown at *a*′, in such manner that the width of the fabric passed between each pair of the plain portions, C′, will be greater, if stretched out to its full extent, than the width of the said portions, so that the said fabric, by means of its increased width, will be crinkled or puffed in passing between the aforesaid portions, C′, as will be presently fully set forth.

"The end of the strip of cloth or fabric from which the fluted puffing is to be formed is passed into and through the guide, E, and between the rollers, B C, and a rotary motion in the direction of the arrow, shown in Fig. 2, is communicated to said rollers by turning the crank *b*, or by other suitable means.

"The fabric is drawn lengthwise between the rollers, those portions thereof which pass between the several opposite series, A′, of grooves and flutes of the two rollers being fluted, as shown at *g*, in Fig. 4, while those portions of the said fabric which pass between the smooth, narrow annular faces, B′, of the rollers, being formed into gathers by the fluting of the fabric at the sides or edges thereof, are pressed flat by passing under the pressers, D, as the fabric is drawn along, at the same time that those portions of the fabric drawn through the curved or arched parts, *a*′, of the guide, E, being, if stretched to their full extent, of a width greater than that of the smooth cylindrical portions, C′, and being also gathered by the fluting formed at their sides or edges, are caused to assume a crinkled or puffed form, as they are passed between the aforesaid portions, C′, the distance between the opposite smooth portions, C′, aforesaid being such that no pressure is exerted upon the fabric passing between them beyond that required to simply press the convex surfaces thereof downward to a sufficient degree to insure the shaping thereof into the puffed condition just herein described.

"The extent to which the material will be thus contracted laterally, as it were, or drawn up between the flutes, will be governed by the excess in length of the arched portions, *a*′, of the guide over a straight line or lines connecting such arched portions at their base.

"By these means, the fluted puffing is brought into the form required in the finished article without the necessity of washing the same, in order to bring the puffing into such form.

"To complete the puffing, longitudinal rows of stitching are formed in the flat parts, *h*, of the puffing, to retain it in shape; and, when desired, the puffing as thus completed may be divided longitudinally in the said parts, *h*, to separate it into narrow pieces, as required for various trimming purposes.

"What I claim as new, and desire to secure by letters-patent, is —

"The guide, E, constructed with one or more curved or arched portions, *a'*, in combination with suitable fluting-rollers, substantially as herein set forth, for the purpose specified."

The drawings referred to in the foregoing specification are as follows: —

Fig. 1.

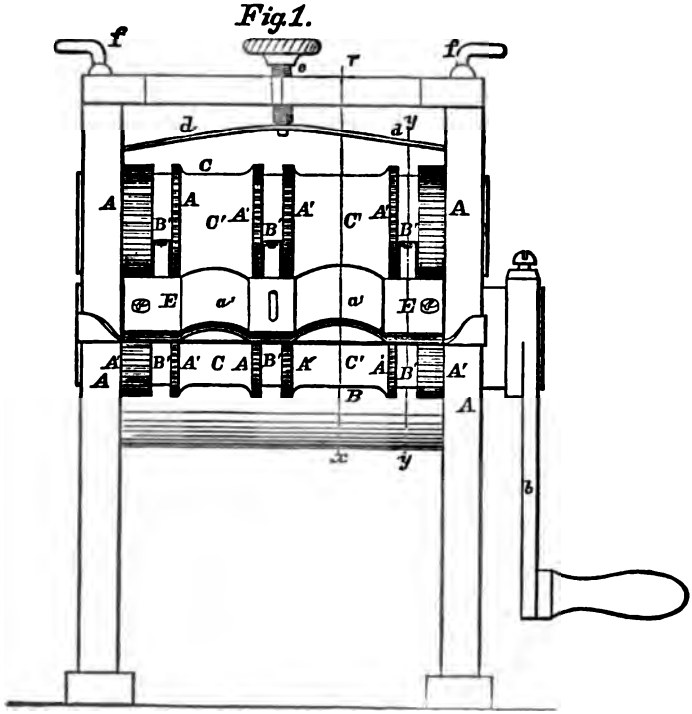

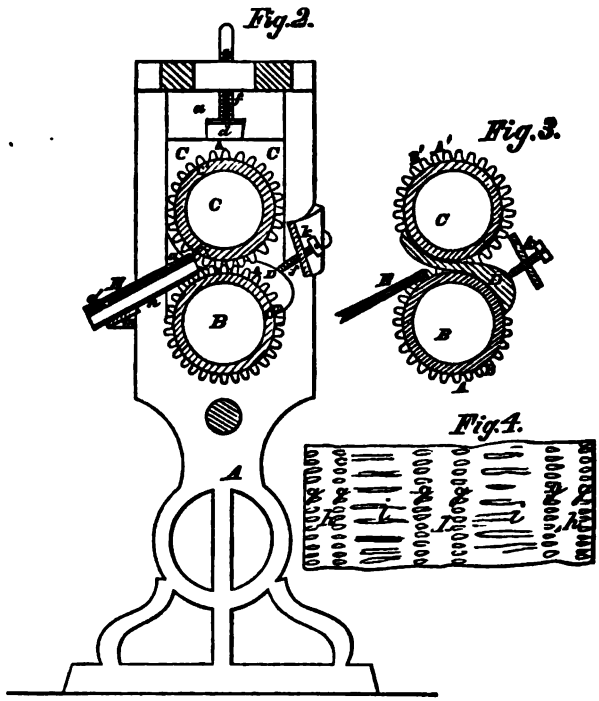

The reissued letters-patent No. 3001 were for a new article of manufacture therein described, being an improvement in fluted puffing.

Werner, to whom were granted letters-patent No. 134,621, bearing date Jan. 7, 1873, for an improvement in crimping and fluting machines, denied the infringement, and insisted that the letters-patent granted to King were void, for want of novelty. The specification forming part of the letters-patent granted to Werner is as follows: —

"*To all whom it may concern:*

"Be it known that I, Robert Werner, of Hoboken, in the county of Hudson, State of New Jersey, have invented a new and improved combined crimping and fluting machine, of which the following is a specification: —

"Fig. 1 represents a vertical transverse section of my improved crimping and fluting machine, the line, *c c*, Fig. 2, indicating the

plane of section. Fig. 2 is a plan or top view of the same. Fig. 3 is a perspective view of the device for holding the fluting against the rollers. Fig. 4 is a vertical transverse section of a modification of my invention; Fig. 5, a face-view of the crimping and fluting produced on the machine; Fig. 6, a transverse section; and Fig. 7, a longitudinal section of such fluting and crimping.

"Similar letters of reference indicate corresponding parts.

"This invention relates to a new machine for producing a fluted and crimped fabric, substantially like that for which a design patent was granted to me on the twenty-ninth day of November, 1870, from a smooth and flat woven fabric; and the invention consists principally in the application to fluting-rollers of a detent, or finger, by which a portion of the fabric is held back, and thereby formed into V-shaped, but more or less irregular, lateral waves and crinkles, whereby the stated and desired effect is produced. This finger is made to bear against a platform over which the fabric is passed to the fluting-rollers, or directly against one of the rollers, as may be desired. The invention also consists in a new arrangement and connection, with said fluting-rollers, of a device for holding the fluted fabric in contact with the same while the crinkled portion of the fabric is being elevated and puffed up by a projecting rib or stationary plate, all as hereinafter more fully described.

"In the accompanying drawing the letter A represents the frame of the machine. In the same are the bearings of two fluting-rollers, B B, which are parallel with each other, and, by preference, in a horizontal position, as indicated. The rollers, B, are provided with zones, *a a*, of fluting or toothed portions, which will cause certain strips of the fabric which pass between the said rollers to be fluted, while the remaining portions of the same fabric will not be fluted. C is a platform secured to the framework, A, in front of and about in line with the space between the two rollers. D is a detent or spring fastened to a bar, *b*, which rests by posts, *d*, upon the platform, C. The free end of the spring, D, bears against said platform midway between the two inner zones, or any pair of zones, *a a*, on said rollers. The fabric is passed over the platform, C, before it enters the rollers, or rather in its passage to the said rollers, and is consequently passed under and subjected to the pressure of the spring, D, being fed or drawn forward by and between the rollers. That portion of the fabric which is subjected to the pressure of the spring, D, will be detained or held back or stretched back to be drawn into the V-shaped crinkles or crimping, which is indicated

in Fig. 5, at *e*. This effect, of course, can only be produced if the detent, D, bears upon the fabric previous to its being acted upon by the rollers, so that the portion affected by said spring can be drawn back by the detent in the manner shown. The same effect can be produced by the modified form of detent shown in Fig. 4, in which case the said detent is made to bear against one of the rollers, B, and fastened to the under side of a plate, C. This modification can only be used when the detent bears against the rollers so far forward of the line that connects the two axes of the two rollers that sufficient material will be at the command of the detent to draw the fabric back into the V-shaped crimping; for, if the detent would apply to the middle of the roller when the fluting has already hold of the fabric, the drawing back could not be produced, inasmuch as the fluting would take up all the surplus fabric, and none would be left for the effect by the detent. E E are metallic plates or bars provided with projecting cheeks, *f*, which said cheeks bear against the fluted portions of the fabric as it emerges from between the two rollers, and hold said fluted portion in contact with the lower roller while a projecting rib, *g*, moves the centre of the crinkled portion from off said roller. This gives the transverse wave of the fabric which is indicated in Fig. 6. The plates or bars, E E, can, by set-screws, *h h*, be adjusted nearer to or further away from the fluted portions of the rollers for the purpose of holding the fluted portion of the fabric more or less firmly against the rollers, and for flattening portions of the fluting between the zones, *a*. The rollers may be made to be hollow, to be heated by steam or otherwise, so that the fabric which is passed between them — preferably in a moist state — may retain the form into which it is put by the action of the machine. It will be found convenient to raise the detent, D, off the platform, C (or withdraw it from contact with the roller, B, when placed as in Fig. 4), in order to enter the end of the fabric between the rollers. With this object, the bar, *b*, is made detachable, and locked by keys, *l l* (or the plate C made to be drawn back and forward).

"Having thus described my invention, I claim as new, and desire to secure by letters-patent, —

"1. The detent, D, arranged in combination with the fluting-rollers, B B, to produce the crinkles or puffing on the fabric, which is partially fluted, as set forth.

"2. The platform C, or C′, arranged in combination with the detent, D, and rollers, B, as specified.

"3. The cheek-pieces, *f*, in the plates, E, applied, in conjunction with the projecting rib, *g*, to the fluting-rollers, B B, as specified."

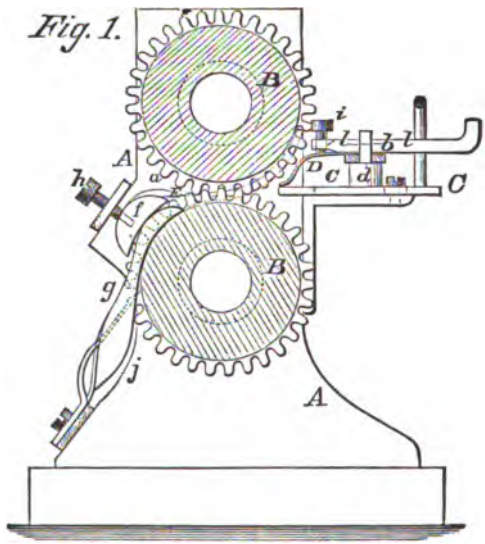

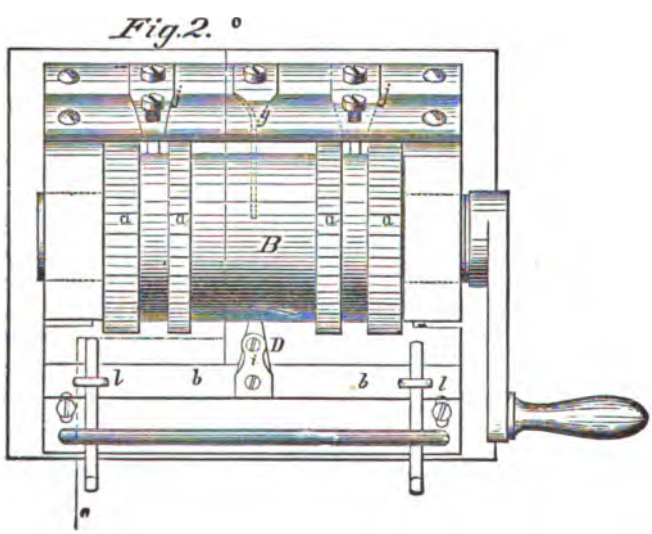

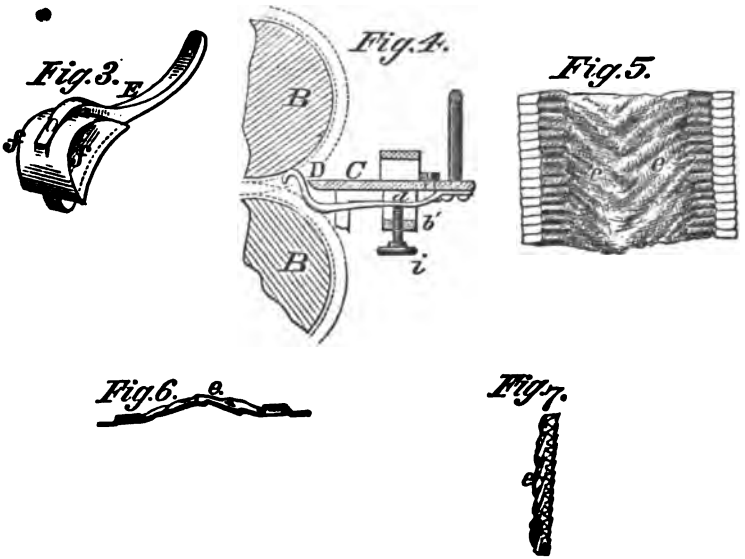

The court below decreed in favor of King, whereupon Werner appealed here.

Mr. Arthur v. Briesen for the appellant.

Mr. Frederic H. Betts, contra.

MR. JUSTICE MILLER delivered the opinion of the court.

Letters-patent were issued to George E. King on the 26th February, 1867, for a new and useful improvement in fluting machines. He surrendered them, and on the 23d June, 1868, had two patents granted him as reissues of the original. The first of these, No. 3000, was for the machine by which the article of fluting and puffing described in the patent was made; and the other, No. 3001, was for the article made as described. The record before us is that of a suit in chancery brought by him against Robert Werner for an infringement of both these patents. Werner defended on the ground that the patents were void for want of novelty, and also by denying the infringement. The Circuit Court held that the defence was sustained as to the patent for the article produced, on the ground that it was not new, but rendered a decree in favor of King as to the reissued patent, No. 3000, for the machine.

Werner alone appeals, and seeks a reversal of the decree on both the grounds urged below.

We will examine the question of infringement first; for, if the appellant has not infringed the patent of the appellee, he can very well leave to others the task of contesting its validity.

The appellant is also patentee of a machine for crimping and fluting, which produces an article similar to that of the appellee, and parts of the machine by which the purpose is effected are substantially the same as his. If on looking at the machine in detail there is such substantial identity as to all its parts, the appellant must be held to be an infringer, for his patent bears a date more than four years subsequent to that of the appellee.

The appellee's schedule declares that his invention is designed for making puffing applicable to shirt-bosoms, trimming, or other purposes of dress, in which the article, as it issues from the machine, is (without having recourse to laundering) delivered in a complete form, either singly, or in two or more series or rows, composed of flattened borders with flutes running along their inner edges, and puffed or wrinkled surfaces between the flutes.

The fabric to be fluted and puffed is drawn between a pair of rollers moved by a crank, the rollers, where they approach each other, having flutes or grooves so arranged as by their pressure on the fabric as it passes between them to make the fluting and to flatten it. These grooves on the rollers, while they are continuous in the annular or circumferential direction of the rollers, are interrupted in their longitudinal direction by smooth spaces, so that the material passing between the rollers is fluted or crimped in parts of its width and left plain in other parts which do not pass over the grooves. It is obvious, if this plain portion of the fabric, as it passes over the plain surface of the roller, can be so presented as to be compressed laterally, or in any other manner to have more of the material thus forced into the machine than is necessary to cover this plain surface, that when it comes out of the machine, while the fluted parts are fixed and flattened, the intermediate portion must present a puffed and irregular surface. It is this effect which is desired, and which King, by an additional contrivance, produces; and it is this contrivance which, in combination with the fluting-rollers

already described, but which are not new, he claims as his invention.

This part of the machine consists of a double-plated segment of a hollow cylinder, the arch of which is upwards, so arranged with regard to the fluting-rollers that the part of the material which is intended to be puffed and not fluted, passing first between the plates of this arched guide, is presented to the plain surface of the roller, with the width of the strip increased by the difference between the lines of the curved or arched surface of the cylinder and the plain or horizontal surface of the roller which receives it. The result is, that when the material comes out of the machine this redundancy of the plain part of it assumes the form of irregular puffs, which is the end to be attained. All this is very well described, and specific references illustrated by drawings are given to the various parts of the machine.

"What I claim as new," he says, in conclusion, "and desire to secure by letters-patent, is: the guide, E, constructed with one or more curved or arched portions, *a*, in combination with suitable fluting-rollers, substantially as herein set forth for the purpose specified."

The schedule of Werner's patent, which is numbered 134,621, describes the same kind of fluting-rollers, and is designed to produce, while passing through them, what he calls a crinkled surface in that part of the fabric not fluted. But in his machine the redundancy of material is produced by passing it over a smooth, flat surface, from which it is presented to the fluting-rollers; and while so passing over this flat surface a detent, or finger, is applied to that part of it not to be fluted, which, by reason of the pressure of a spring, holds back this part of the material. It is thus formed into V-shaped waves or crinkles, more or less irregular, whereby the desired effect is produced.

It will be observed that the main features of both machines are the same, and that whatever is new in either is ingrafted upon a fluting-machine, many of which were patented long prior to both of them.

The question we are now to consider is, whether the flat surface and finger, or detent, of Werner are the mechanical

equivalents of the double-plated segment of a cylinder used by King, within the principles of the patent law on that subject.

It is said that they are equivalents, because they produce the same result. The fact stated may be doubted; for an examination of numerous pieces of textile fabrics passed through both machines show in those crimped by Werner's the regular V-shaped crinkle, with the acute angle pointing in the same direction with great uniformity; while in those passed through King's the puffs are elevated, wavy, and irregular. But since the patent for the article is not contested here, this difference is of no other importance than as it illustrates the difference in the mode of operation of the two machines.

It is further said, that the difference is merely one of form; and cases are cited in which this court has held that a mere variation in the form or shape of the instrument cannot be successfully used to evade the monopoly. But where form is of the essence of the invention, it is necessarily material; and, if the same object can be attained by a machine different in form where that form is inseparable from the successful operation of the instrument, there is no infringement. *Winans* v. *Denmead*, 15 How. 330. In King's patent, the result sought is wholly due to the guiding arch, through which the fabric is carried. It is this semicircular form which gives the redundancy of material necessary to the puff; and no guide which did not in some manner give the material an arched or curved shape as it passed into the fluting-rollers can be considered as a part of King's patent. It is not only necessary to an infringement that the arrangement which infringes should perform the same service, or produce the same effect, but, as Mr. Justice Nelson said in *Sickles* v. *Borden* (3 Blatchf. 535), it must be done in substantially the same way. *Burr* v. *Duryee*, 1 Wall. 531.

The difference in the shape or form of the guide in these machines is not the only one. They operate on entirely different principles. King's instrument is, to some extent, automatic.

The strip of the fabric to be used, being once between the upper and under plates of his arched guide, cannot escape, and it must, in passing into the fluting-rollers, present the same amount of redundant material, whatever may be the elasticity

or rigidity of the fabric. A piece of leather would, if it passed through, present precisely the same elevation of the arch, and length of line of the semicircles, as a piece of gauze. Whereas, under the operation of the detent of Werner, the length of the lines and the acuteness of the angle of the V would vary with the resisting strength of the fabric and the power of the spring which pressed the detaining finger.

Another marked difference is, that in King's machine the redundant fulness which makes the puff is produced by a pressure which is uniform over the surface of the fabric, the two plates giving it the exact form required, and no other; while Werner's finger seizes the fabric in the centre of the part to be crinkled, and by pulling on it at this central point, as it is dragged in between the rollers, enough of the material is drawn in from the edges towards the centre to create the redundancy necessary to the puff or crinkle. This is done by the material passing over a flat, smooth surface; and while on this flat plate the finger is applied to it, and detains or draws to this central point a portion of the fabric. There exists no such plate or flat surface or finger in King's machine. It seems impossible to hold that this flat surface, this pointed finger whose force is dependent on a spring, are the mechanical equivalents of the double-plated semi-cylinder of King's guide. If this be so, it is because King's patent covers every method which can be invented for presenting the material to the fluting-rollers in such a manner as to create a redundancy to be made into puffs. This is not claimed; and, if claimed, the claim would be fatal to the patent.

We are of opinion that the machine of Werner, and its use by him, is no infringement of King's, and the decision of the Circuit Court will, therefore, be reversed, and the case remanded with directions to dismiss the bill; and it is

So ordered.

UNITED STATES v. MORRISON.

1. A quartermaster of a regiment of cavalry, who also serves as acting assistant commissary, is entitled to the additional compensation of $100 per annum provided for by sect. 1261 of the Revised Statutes.
2. As such quartermaster receives no compensation for staff service separate from that of rank, he does not, within the meaning of the army regulations, receive pay for his staff appointment.

APPEAL from the Court of Claims.

Morrison, the appellee, a lieutenant in the tenth regiment of cavalry, was appointed regimental quartermaster, and his appointment approved June 30, 1875. On the same day, Hunt, a second lieutenant in the regiment, was promoted to be first lieutenant in the place of Morrison, "appointed regimental quartermaster." On the 22d October, 1875, Morrison, "in addition to his other duties," was "assigned to duty as assistant-commissary of post;" and, by virtue of that appointment, served as acting assistant-commissary from Nov. 1, 1875, to and including, Feb. 28, 1877. He has been paid in full as quartermaster, but nothing in addition as acting assistant-commissary. This action is brought to recover at the rate of $100 a year for the extra service. The court below gave judgment in his favor for $133.33, whereupon the United States appealed here.

Mr. Assistant-Attorney-General Smith for the appellant.

Mr. Halbert E. Paine and *Mr. Benjamin F. Grafton*, *contra*.

MR. CHIEF JUSTICE WAITE delivered the opinion of the court.

The single question presented in this case is, whether, since the Revised Statutes, a regimental quartermaster, serving also as acting assistant-commissary, is entitled to additional pay on that account.

By sect. 1102, Rev. Stat., each regiment of cavalry is to have among its officers one quartermaster, who is to be an "extra lieutenant, selected from the first and second lieutenants of the regiment." Such has been the law since 1866. 12 Stat. 599, sect. 11; 14 id. 332, sect. 3. The selection is made by the

colonel or permanent commanding officer of the regiment, subject to the approval of the Secretary of War.

Until 1870, the pay of regimental quartermasters was "ten dollars per month in addition to their pay in the line," and forage (2 Stat. 482, sect. 24); but the act of July 15, 1870 (16 id. 320, sect. 24), provided that the "pay of regimental quartermaster shall be $1,800 [a year]; the pay of first lieutenant, mounted, shall be $1,600; the pay of first lieutenant, not mounted, shall be $1,500; the pay of second lieutenant, mounted, shall be $1,500; the pay of second lieutenant, not mounted, shall be $1,400; . . . the pay of acting assistant-commissary shall be $100 in addition to pay of his rank." This provision has been reproduced in the Revised Statutes, sect. 1261.

A regimental quartermaster is, therefore, either a first or second lieutenant in rank, and his pay $1,800. There is no provision for the pay of the rank of lieutenant disconnected from the service to be performed, but the pay of the rank is graduated by the service. The compensation is not for rank and service, but for rank according to service. Thus, a lieutenant in cavalry service is paid more than in infantry, and in regimental service more than in cavalry. Whether in one service or another, his rank is that of lieutenant, and consequently his pay is that of his rank. Under the law as it was before 1870, he was paid for his service upon the staff in addition to that for his rank, but now the pay of his rank includes all. Being an extra lieutenant in the regiment assigned to duty as quartermaster, and consequently performing regimental service, his pay as lieutenant is $1,800. When, therefore, the additional duty of acting assistant-commissary is put upon him, it would seem to be clear that, looking at the statute alone, he is entitled to the additional pay allowed for that service.

It is contended, however, that he is not, because, by the army regulations, "no officer shall receive pay for two staff appointments at the same time." Army Reg. 1863, par. 1345. If it be conceded that both the quartermaster and acting assistant-commissary are now staff appointments, the result claimed does not necessarily follow. When these regulations were adopted, the compensation of a quartermaster for his staff ser-

vice was by a specific addition to his pay in the line. At that time, therefore, it might well be said that the addition was pay for the staff appointment. But now there is no compensation for staff service separate from that of rank; and, in our opinion, it cannot be said that, within the meaning of the regulation, a quartermaster receives pay for his staff appointment. He gets more pay as lieutenant by reason of his transfer to a new service, but nothing separate for his appointment. This being the case, the additional compensation which the law gives an acting assistant-commissary is not, in the case of a quartermaster performing that service, pay for a second staff appointment.

Judgment affirmed.

INSURANCE COMPANY v. NORTON.

1. An insurance company may waive any condition of a policy inserted therein for its benefit.
2. As the company may at any time, at its option, give authority to its agents to make agreements, or to waive forfeitures, it is not bound to act upon the declaration in its policy that they have no such authority.
3. Whether it has or has not exercised that option is a fact provable by either written evidence or by parol.
4. As denoting the power given by an insurance company to a local agent, evidence is admissible as to its practice in allowing him to extend the time for the payment of premiums and premium notes; and the jury, upon such evidence, may find whether he was authorized to make such an extension, and, if so, whether it was in fact made in the case on trial.
5. In this case, the court holds that the fact that the premium note was already past due when the agreement to extend it was made is not sufficient to prevent that agreement from operating as a waiver of the forfeiture.

ERROR to the Circuit Court of the United States for the Northern District of Illinois.

This action was brought by Phoebe A. Norton on a policy of insurance, issued by the Knickerbocker Life Insurance Company of New York, on the life of Jesse O. Norton, for the benefit of his wife and children. The original policy was dated April 20, 1867; and, being partly destroyed by fire, was reissued in April, 1874. The premium was $385, payable annually on the twentieth day of April in each year; and the

policy, amongst other things, contained the following condition: —

"*Second*, If the said premium shall not be paid on or before twelve o'clock, noon, on the day or days above mentioned for the payment thereof, at the office of the company in the city of New York (unless otherwise expressly agreed in writing), or to agents when they produce receipts signed by the president or secretary, or if the principal of or interest upon any note or other obligation given for the premium upon said policy shall not be paid at the time the same shall become due and payable, then, and in every such case, the company shall not be liable to pay the sum assured, or any part thereof; and said policy shall cease and be null and void, without notice to any party or parties interested herein, except that the stipulation for a new policy, as hereinbefore provided, shall remain in force.

"*Third*, In case a loan of or credit for a portion of said premium shall be made on this policy, said policy shall be subject to all of the terms and conditions expressed in the acknowledgment or obligation given for such loan or credit, and to the payment of interest thereon in advance; and said loan or credit shall be a just counterclaim against any amount which shall become due and payable on the policy, and shall be deducted therefrom."

By an indorsement on the policy, it was declared that "agents of the company are not authorized to make, alter, or abrogate contracts, or waive forfeitures."

The insured died on the 3d of August, 1875; and the company refused to pay the insurance, on the ground that the policy was forfeited by reason of the non-payment of certain notes given for the last premium, which was due April 20, 1875. It was conceded that all the other premiums had been paid.

The declaration, besides a special count on the policy, contained the ordinary money counts. The defendant pleaded the general issue, and, specially, that the premium notes were not paid at maturity, and that the policy thereby became forfeited. The plaintiff replied, first, that the agent of the defendant at Chicago, regularly authorized by the defendant so to do, extended the time of payment of the first note, which became due on the 20th of June, to the 20th of July, when she tendered the amount thereof to the agent, who refused to receive

the same; and that she also tendered the amount of the second note at its maturity, which was likewise refused: secondly, that, after the maturity of the first note, the agent of the defendant, regularly authorized so to do, waived all advantages the company might have claimed because of its non-payment at maturity, and extended the time of payment, as before stated, with an averment of tender and refusal. The defendant, by way of rejoinder, denied that it had extended the time of payment, or that it had waived any advantages, as alleged. This was the issue at the trial.

It appeared on the trial that the premium in question was settled by the payment of $50 in cash, and the balance in two promissory notes given by Jesse O. Norton to the insurance company, payable respectively in two and three months, and maturing, one on the 20th of June, the other on the 20th of July, 1875. Each note contained a clause, declaring that if it were not paid at maturity the policy would be void, — this being the usual form of premium notes.

On the issue as to extension of time on the notes, and the authority of the agent to grant it, the plaintiff produced three witnesses: Randall, agent of the company down to March, 1874; Frary, his successor, who was agent at the time in question; and Martin Norton, son of the insured, who acted in behalf of his father in reference to the alleged extension, and to the tender of payment.

The testimony of these witnesses tended to show that formerly the company had allowed their agent to extend time on premium notes for a period of ninety days; that this indulgence was afterwards reduced to sixty days, and then to thirty; and that, at the period in question, the agent was required, as a general thing, to return the notes in his hands if not paid by the 15th of the month following that in which they became due.

As to what took place with reference to the notes in question, there is some conflict in testimony between Martin Norton and the agent, Frary. The former testified, in substance, that he called on the agent, in behalf of his father, in June, 1875, a few days after the first note became due, and told him that his father wished it extended for thirty days; to which the agent agreed, — his answer being, "All right." That he called again

on or about the 8th of July, to request an extension of the other note, which would become due on the 20th of that month, and a further extension of the first note to the 10th of August. That the agent said he would have to write to the company about this. That, on the 13th, he called again, and told the agent that his father had concluded to pay both notes; and the agent gave him the figures, showing what was due on them. That he called again on the 15th, prepared to pay the notes, when he was informed by the agent that he could not receive the money, having received orders from the company to return all the papers to New York, and he had done so. That he then made a legal tender of the amount due on the first note, which was refused. Frary testified that he had no recollection of the first interview, or of agreeing to extend the first note. As to the rest, they did not materially differ.

In addition to the testimony relating to the general practice of the agents in granting extensions of time for the payment of premium notes, evidence was given tending to show that Norton, the insured, had usually received more or less indulgence of that kind.

The counsel for the defendant moved to strike out the testimony touching the usages of the company as to non-payment of prior premium notes by Norton, and prior indulgence thereon to him, as incompetent, and in conflict with the terms of the policy, and as showing no authority in Frary to give the alleged extension; which was without consideration, if made, and after the forfeiture had occurred.

The counsel for the defendant also moved to strike out that portion of Martin Norton's testimony relative to an agreement for an extension of the premium notes, such agreement being without authority on the part of the agent, &c. The court overruled the latter motion; and, as to the first, directed the jury to disregard so much of Randall's testimony as tended to show the conduct of the defendant and plaintiff in regard to former payments; but allowed to stand so much of Randall's and Frary's testimony as tended to show the powers of the agents in reference to giving extensions on premiums or prem ium notes. This ruling was excepted to.

In charging the jury, the court left it to them to say, from

the evidence, whether the agent of the defendant had power to waive a strict compliance with the terms of the agreement as to the time of paying the notes given for the premium; and, if he had such power, whether such a waiver was in fact made: if it was, and if the insured offered to pay the notes within the time to which they were extended, and the company refused to receive payment, that then the plaintiff was entitled to recover. The jury were further instructed that the power vested in Randall, the previous agent, was only pertinent as it tended to throw light on the powers vested in his successor, Frary. The defendant's counsel excepted to the charge, and submitted several instructions, the purport of them being, in substance, that, in view of the express provisions of the policy, the evidence was utterly irrelevant and incompetent to show any authority in the agent to grant any indulgence as to the time of paying the notes, and to waive the forfeiture incurred by their non-payment at maturity; or to show that any valid and legal extension was, in fact, granted, or that the forfeiture of the policy was waived.

These instructions were refused. There was a judgment for the plaintiff, whereupon the company sued out this writ of error.

Mr. H. G. Miller and *Mr. Thomas G. Frost* for the plaintiff in error.

The parties are bound by the policy, and the court must enforce it according to its tenor. *Pitt* v. *Berkshire Life Insurance Co.*, 100 Mass. 500; *Roehner* v. *Knickerbocker Life Insurance Co.*, 4 Daly (N. Y.), 412; *Robert* v. *New England Life Insurance Co.*, 1 Disney (Ohio), 355; *Fifty Associates* v. *Howland*, 5 Cush. (Mass.) 214; *Baker* v. *Union Mutual Life Insurance Co.*, 43 N. Y. 283; *Howell* v. *Knickerbocker Life Insurance Co.*, 3 Robt. (N. Y.) 232; *Catoir* v. *American Life Insurance and Trust Co.*, 33 N. J. L. 487; *Wall* v. *Home Insurance Co.*, 36 N. Y. 157; *New York Life Insurance Co.* v. *Statham et al.*, 93 U. S. 24; *Beadle* v. *Chenango County Mutual Insurance Co.*, 3 Hill (N. Y.), 161; *Shaw* v. *Berkshire Life Insurance Co.*, 103 Mass. 254; *Bradley* v. *Potomac Fire Insurance Co.*, 32 Md. 108; *Union Mutual Life Insurance Co.* v. *McMillen*, 24 Ohio St. 67; *Mutual Benefit Life Insurance Co.* v. *Ruse*, 8 Ga. 534; *Sullivan* v. *Cotton States Life Insurance Co.*, 43 id. 423.

The time of payment in such an instrument is material, and of the essence of the contract, and a failure to pay involves an absolute forfeiture, which the agent had no authority to waive, nor could he grant an extension of time for the payment of the premium note. *Security Insurance Co.* v. *Fay*, 22 Mich. 467.

When such extension was applied for, the forfeiture of the policy had been already incurred, and the pretended agreement for an extension was void, for want of consideration.

Mr. S. P. McConnell for the defendant in error.

Although a policy declares that agents have no power to waive a forfeiture or modify the contract of insurance, the company issuing it may nevertheless, by grant, authorize them to do either, or, by its conduct, estop itself from denying that such grant has been made. *Ætna Insurance Co.* v. *Maguire et al.*, 51 Ill. 342; *Perkins* v. *Washington Insurance Co.*, 4 Cow. (N. Y.) 645; *Lightbody* v. *American Life Insurance Co.*, 23 Wend. (N. Y.) 18; *McEwen* v. *Montgomery County Insurance Co.*, 5 Hill (N. Y.), 101; *Eclectic Life Insurance Co.* v. *Fahrenkrug*, 68 Ill. 463; *Keenan* v. *Missouri State Mutual Insurance Co.*, 12 Iowa, 126.

The extent of the agent's authority is a question for the jury. *Sheldon* v. *Connecticut Mutual Life Insurance Co.*, 25 Conn. 207; *Hough* v. *City Fire Insurance Co.*, 29 id. 10; *Farmers' Mutual Insurance Co.* v. *Taylor*, 73 Pa. St. 342.

A new consideration is not necessary to validate either the waiver of a forfeiture or an extension of time for the payment of the premium, or of the notes given therefor. *Leslie* v. *Knickerbocker Life Insurance Co.*, 2 Hun (N. Y.), 616; *Viele* v. *Germania Insurance Co.*, 26 Iowa, 9.

A party cannot insist upon a condition precedent, the breach of which he caused. *Young* v. *Hunter*, 6 N. Y. 203.

MR. JUSTICE BRADLEY, after stating the case, delivered the opinion of the court.

The material question in this case is, whether, in view of the express provisions of the policy, the evidence introduced by the assured was relevant and competent to show that the company had authorized its agent to grant indulgence as to the time of paying the premium notes, and waive the forfeiture incurred by

their non-payment at maturity; or to show that any valid extension had, in fact, been granted, or the forfeiture of the policy waived.

The written agreement of the parties, as embodied in the policy and the indorsement thereon, as well as in the notes and the receipt given therefor, was undoubtedly to the express purport that a failure to pay the notes at maturity would incur a forfeiture of the policy. It also contained an express declaration that the agents of the company were not authorized to make, alter, or abrogate contracts or waive forfeitures. And these terms, had the company so chosen, it could have insisted on. But a party always has the option to waive a condition or stipulation made in his own favor. The company was not bound to insist upon a forfeiture, though incurred, but might waive it. It was not bound to act upon the declaration that its agents had no power to make agreements or waive forfeitures; but might, at any time, at its option, give them such power. The declaration was only tantamount to a notice to the assured, which the company could waive and disregard at pleasure. In either case, both with regard to the forfeiture and to the powers of its agent, a waiver of the stipulation or notice would not be repugnant to the written agreement, because it would only be the exercise of an option which the agreement left in it. And whether it did exercise such option or not was a fact provable by parol evidence, as well as by writing, for the obvious reason that it could be done without writing.

That it did authorize its agents to take notes, instead of money, for premiums, is perfectly evident, from its constant practice of receiving such notes when taken by them. That it authorized them to grant indulgence on these notes, if the evidence is to be believed, is also apparent from like practice. It acquiesced in and ratified their acts in this behalf. For a long period, it allowed them to give an indulgence of ninety days; after that, of sixty; then of thirty days. It is in vain to contend that it gave them no authority to do this, when it constantly allowed them to exercise such authority, and always ratified their acts, notwithstanding the language of the written instruments.

We think, therefore, that there was no error committed by the court below in admitting evidence as to the practice of the

company in allowing its agents to extend the time for payment of premiums and of notes given for premiums, as indicative of the power given to those agents; nor any error in submitting it to the jury, upon such evidence, to find whether the defendant had or had not authorized its agent to make such extensions; nor in submitting it to them to say whether, if such authority had been given, an extension was made in this case.

Much stress, however, is laid on the fact that the extension claimed to have been given in this case was not given, or applied for, until after the first note became due and the forfeiture had been actually incurred. But we do not deem this to be material. The evidence does not show that any distinction was made in granting extensions before or after the maturity of the notes. The material question is, whether the forfeiture was waived; and we see no reason why this may not be done as well by an agreement made for extending the note after its maturity, as by one made before. In either case, the legal effect of the indulgence is this: the company say to the insured, Pay your note by such a time, and your policy shall not be forfeited. If the insured agrees to do this, and does it, or tenders himself ready to do it, the forfeiture ought not to be exacted. In both cases, the parties mutually act upon the hypothesis of the continued existence of the policy. It is true, if the agreement be made before the note matures and before the forfeiture is incurred, it would be a fraud upon the assured to attempt to enforce the forfeiture, when, relying on the agreement, he permits the original day of payment to pass. On the other hand, if the agreement be made after the note matures, such agreement is itself a recognition, on the company's part, of the continued existence of the policy, and, consequently, of its election to waive the forfeiture. It is conceded that the acceptance of payment has this effect; and we do not see why an agreement to accept, and a tender of payment according to the agreement, should not have the same effect. Both are acts equally demonstrative of the election of the company to waive the forfeiture of the policy. Grant that the promise to extend the note is without consideration, and not binding on the company, — which is perhaps true as well when the promise is made before maturity as when it is made afterwards, — still it does not take from the company's act the

legitimate effects of such act upon the forfeiture of the policy. Perhaps the note might be sued on in disregard of the extension; but if it could be, that would not annihilate the fact that the company elected to waive the forfeiture by entering into the transaction. If it should repudiate its agreement, it could not repudiate the waiver of the forfeiture, without at least giving to the assured reasonable notice to pay the money.

Forfeitures are not favored in the law. They are often the means of great oppression and injustice. And, where adequate compensation can be made, the law in many cases, and equity in all cases, discharges the forfeiture, upon such compensation being made. It is true, we held in *Statham's Case* (93 U. S. 24), that, in life insurance, time of payment is material, and cannot be extended by the courts against the assent of the company. But where such assent is given, the courts should be liberal in construing the transaction in favor of avoiding a forfeiture.

The case of leases is not without analogy to the present. It is familiar law, that, when a lease has become forfeited, any act of the landlord indicating a recognition of its continuance, such as distraining for rent, or accepting rent which accrued after the forfeiture, is deemed a waiver of the condition.

In *Doe* v. *Meux* (4 Barn. & Cress. 606) there was a general covenant to repair, and a special covenant to make specific repairs after three months' notice; and a condition of forfeiture for non-performance of covenants. The landlord gave notice to the tenant to make certain specific repairs within three months. This was held a waiver of the forfeiture already incurred under the general covenant. Justice Bailey said: "The landlord, in this case, had an option to proceed on either covenant; and, after giving notice to repair within three months, he might have brought an action against the defendant upon the former covenant, for not keeping the premises in repair. But that is very different from insisting upon the forfeiture. . . . I think that the notice amounted to a declaration that he would be satisfied if the premises were repaired within three months, and that he thereby precluded himself from bringing an ejectment before the expiration of that period."

In *Doe* v. *Birch* (1 Mee. & W. 402), there was a covenant on

the part of the tenant to make certain improvements on the premises within three months, or that the lease should be void. He failed to make the improvements in the manner stipulated; and, after the expiration of the three months, the landlord's son, on his father's behalf, made a demand of a quarter's rent. But, it not appearing that the landlord knew of the tenant's failure with regard to the improvements, it was held that the son had not sufficient authority to waive the forfeiture. Otherwise, it seems, that the demand of the rent would have amounted to a waiver. Baron Parke referred to *Green's Case* (1 Croke, 3), where calling the party a tenant, in a receipt for bygone rent, was held to be sufficient evidence of a waiver, though the acceptance of that rent was not such. And he adds: "If it had been proved that the father had notice of the alterations, and he had still allowed the son to receive the rent, the forfeiture might have been waived. But that was not proved; and the question of waiver does not, therefore, distinctly arise in the case. If it had, the authorities cited show that this was a lease voidable at the election of the landlord. Then, I think that an absolute, unqualified demand of rent, by a person having sufficient authority, would have amounted to a waiver of the forfeiture, and it would have been like the case I cited from Croke's Reports."

In *Ward* v. *Day* (4 Best & Smith, 335), after a forfeiture of a license to gather minerals off of a manor had been incurred, the landlord entered into negotiations with the licensee and his son, to grant to the latter a renewal of the license when it should expire; and terms were agreed on, which the landlord afterwards refused to carry out. It was held, that, by entering into these negotiations, he waived the forfeiture of the original license. The negotiations assumed that the original license was to continue to its termination. The exaction of the forfeiture was in the landlord's election; and he evinced his election not to enforce it by entering into the negotiations. Justice Blackburn says: "Most of the cases in which the doctrine of election has been discussed have been cases of landlord and tenant under a regular lease, in which has been reserved a right of re-entry for a forfeiture; that is, an option to determine the lease for a forfeiture: but this doctrine is not, as Mr. Russell seems to

think, confined to such cases. So far from that being so, the doctrine is but a branch of the general law, that, where a man has an election or option to enter into an estate vested in another, or to deprive another of some existing right, before he acts he must elect, once for all, whether he will do the act or not. He is allowed time to make up his mind; but when once he has determined that he will not consider the estate or lease, whichever it may be, void, he has not any further option to change his mind." And then the learned judge cites authorities, going back to the Year Books, to show that a determination of a man's election in such cases may be made by express words, or by act; and that if, by word or by act, he determines that the lease shall continue in existence, and communicates that determination to the other party, he has elected that the other shall go on as tenant.

These cases show the readiness with which courts seize hold of any circumstances that indicate an election or intent to waive a forfeiture. We think that the present case is within the reason of these authorities; and that the objection, that the note was already past due when the agreement to extend it was made, is not sufficient to prevent said agreement from operating as a waiver of the forfeiture.

Several minor points were raised by the defendant; but they are all either substantially embraced in the main points already considered, or are not of sufficient force to require special discussion.

We find no error in the record, and the judgment of the Circuit Court is

Affirmed.

MR. JUSTICE SWAYNE, MR. JUSTICE FIELD, and MR. JUSTICE STRONG dissented.

MR. JUSTICE STRONG. I dissent from the judgment given in this case. The insurance effected by the policy became forfeited by the non-payment *ad diem* of the premium note. The policy then ceased to be a binding contract. It was so expressly stipulated in the instrument. Admitting that the company could afterwards elect to treat the policy as still in force, or, in other words, could waive the forfeiture, the local agent could

not, unless he was so authorized by his principals. The policy declared that agents should not have authority to make such waivers. And there is no evidence in this case that the company gave to the agent parol authority to waive a forfeiture after it had occurred. They had ratified his acts extending the time of payment of premium notes, when the extension was made before the notes fell due. But no practice of the company sanctioned any act of its agent done after a policy had expired, by which new life was given to a dead contract.

McLEAN v. FLEMING.

1. Where a manufacturer has habitually stamped his goods with a particular mark or brand, a court of equity will restrain another party from adopting it for the same kind of goods.
2. Positive proof of fraudulent intent on the part of the infringer is not required where the infringement is clearly shown.
3. Although no precise rule, applicable to all cases, can be laid down as to the degree of resemblance necessary to constitute an infringement of a trade-mark, an injunction will be granted where the imitation is so close, that, by the form, marks, contents, words, or their special arrangement, or by the general appearance of the infringing device, purchasers exercising ordinary caution are likely to be misled into buying the article bearing it for the genuine one.
4. It is not necessary, to entitle a party to an injunction, that a specific trade-mark has been infringed. It is sufficient to satisfy the court that the respondent intended to represent to the public that his goods were those of the complainant.
5. In this case, the court holds that the appellant has infringed the trade-mark of the appellee, but that the latter, by his long-continued acquiescence therein, and his unreasonable delay in seeking relief, has been guilty of inexcusable laches, and is not entitled to an account for profits. The decree below is therefore affirmed, so far as it awards an injunction, but reversed as to damages; and costs in this court are allowed to the appellant.

APPEAL from the Circuit Court of the United States for the Eastern District of Missouri.

The bill in this case was filed June 1, 1872, by Cochrane Fleming, to restrain the alleged infringement of his trade-mark for liver pills, by James H. McLean.

As early as 1834, Dr. Charles McLane, of Morgantown, Va., made and sold liver pills, putting them up in wooden boxes,

labelled "Dr. McLane's Liver Pills." In June, 1844, Jonathan Kidd, having purchased the exclusive right from him, began, at Pittsburg, Penn., to make and sell them. In 1845, Kidd formed a partnership with John Fleming, under the name of Jonathan Kidd & Co. Kidd died in 1853, and Fleming, the surviving partner, and one Cochrane Fleming, having purchased from Kidd's executors all his interest in the business, entered into partnership, under the name of Fleming Brothers. That firm continued until 1865, when Cochrane retired. John carried on the business in the firm name until his death, in November, 1870, whereupon Cochrane succeeded under his will to all his rights in the business.

Up to August, 1847, the pills in question were wrapped in an ordinary printed label. In that year, Kidd & Co. commenced putting them up in wooden boxes, on the cover of each of which were stamped in red wax the words "McLane's Liver Pill," and on the wrapper, in a narrow border of scalloped pattern surrounding a panel, with a background of wave-line engraving, was printed in red ink a label bearing the words "Dr. C. McLane's Celebrated Liver Pills." In 1855, Fleming Bros. changed the color of the label to black, and made certain other changes, as follows: the groundwork of the engraved wrapper on the top of the box being composed of fine lines, crossing the box diagonally, and at right angles with each other, and bearing the words, in white, "Dr. C. McLane's Celebrated Liver Pills," "Celebrated Liver Pills" being upon a scroll similar to a double ogee in form with a black background. On the wrapper were also in white letters the words, "Prepared only by Fleming Bros., successors to Jon. Kidd & Co.," and a fac-simile of their signature and that of C. McLane, in black. This label, which is referred to in the opinion of the court as "Exhibit F," was used until October 1871, when another change was made, and the label mentioned in the decree below, and in the opinion of the court as "Exhibit H," was adopted. In it the groundwork has shaded curved lines cutting and crossing each other in such a way as to produce the effect of alternate light and shade, crossing the top of the box diagonally in place of the straight lines in "Exhibit F." In this label, the words "successors to Jon. Kidd & Co." are omitted.

In 1849, James H. McLean commenced, at St. Louis, Mo., to manufacture his proprietary medicines, and, in 1851, to manufacture and sell liver pills, under the name of "Dr. McLean's Universal Pills;" using first a type-printed label in red letters, which he, in 1852, changed to a lithographed red label, called in the decree "Exhibit L."

This label is printed in ink of a light red color, with the words, "Dr. McLean's Universal Pills," in white letters shaded by red lines running parallel with the length of the label. He used this label until 1866, having in 1863 inserted therein the initials (J. H.) of his name. In 1866, he changed his label to that referred to in the decree as "Exhibit K." In this label, the lines of the background, which is black, cross the top of the box diagonally and at right angles to each other, with the words "Dr. J. H. McLean's Universal Pills or Vegetable Liver Pills" thereon, in white letters. The use of this label he continued until May, 1872, when he adopted a new one, in the use of which no infringement of the complainant's label was found. He also used a stamp in red wax on his goods.

The court below decreed that the respondent, his agents, employés, and servants, be perpetually enjoined and restrained from using, or causing to be used, the words, "D'r J. H. McLean's Universal Pills or Vegetable Liver Pills," or "D'r McLean's Universal Pills," or "D'r J. H. McLean's Universal Pills," upon any label or wrapper for boxes or other packages of pills, resembling or in imitation of the labels or wrappers or trade-mark of the complainant, described as Exhibit H, whether in style of engraving, printing, or lettering; and from vending or exposing for sale, or causing to be vended or exposed for sale, any article of pills having upon the boxes or other packages thereof any such labels or wrappers so made in imitation of or resemblance to the said labels or wrappers of the complainant; but did not enjoin or restrain him from using them on any other labels or wrappers for pills than those described. It also referred the cause to a master, to take and state an account of the damages resulting to the complainant since Nov. 9, 1870, from the violation of his rights.

The master reported the complainant's damages at $7,399.35. The respondent excepted. His exception having been over-

ruled, the report confirmed, and a final decree entered, he appealed to this court.

Mr. Samuel S. Boyd for the appellant.
Mr. M. L. Gray, contra.

MR. JUSTICE CLIFFORD delivered the opinion of the court.

Protection for lawful trade-marks may be obtained by individuals, firms, or corporations entitled to the same, if they comply with the requirements prescribed by the act of Congress; and the provision is, that a trade-mark, duly registered as required, shall remain in force thirty years from the date of such registration, subject to an exception not necessary to be noticed. 16 Stat. 210; Rev. Stat., sects. 4937, 4941.

Exclusive ownership of a certain medicinal manufacture, known as "Dr. C. McLane's Liver-Pills," and of the trade-mark used in advertising and vending the same, is claimed by the complainant; and the record shows that he, on the first day of June, 1872, filed in the Circuit Court a bill of complaint against the respondent, charging that the respondent had unlawfully infringed the said trade-mark; and he prayed for a decree that the respondent shall render an account of the gains and profits made by the infringement, and for an injunction.

Service was made, and the respondent appeared and filed an answer. Proofs were taken; and, the parties having been heard, the court entered a decretal order in favor of the complainant, and sent the cause to a master, to compute the amount of the gains and profits. Due report was made by the master, to which the respondent excepted; and the court overruled the exception, confirmed the report of the master, and entered a final decree for the complainant, in the sum of $7,399.35.

All matters in that court having been finally determined, the respondent appealed to this court, and assigns errors as follows: 1. That the court erred in finding that the labels L and K, or either of them, infringed Exhibit F, as set forth in the decretal order. 2. That the court erred in finding that the complainant was entitled to any damages, and in ordering the assessment thereof, and in allowing him costs. 3. That the court erred in ordering an account of the sales of Exhibits L and K, prior to the 16th of October, 1871, the date of the first use of Exhibit H

by the complainant. 4. That the court erred in overruling the respondent's exception to the master's report.

Medicines of the kind described were first prepared and sold by the physician whose name the pills bear, by putting the same in wooden boxes, labelled with the name of the inventor. For ten years, or more, he used the pills in his practice; but the evidence shows that, on the 19th of June, 1844, he sold the right to use the same to Jonathan Kidd, who, for a year or more, prepared and sold the pills under that agreement, when he formed a partnership with John Fleming, under the style of "Jonathan Kidd & Co.;" which firm continued to prepare and sell the pills until March 29, 1853, when the senior partner died.

They (the firm) dealt largely in the business; and, as early as 1847, in order to designate the medicine as an article of their own manufacture, and to prevent imposition and fraud, they commenced putting the pills in wooden boxes, of uniform size, shape, and appearance, each box containing twenty-two pills, with the name of the original inventor stamped in red wax upon the cover of each box, around which they placed the red label or wrapper described in the bill of complaint. Beyond doubt, that label, with its devices, and the red seal on the box, constituted the trade-mark by which the firm made known to their customers and the public the genuine pills which they prepared and sold; the firm being at the time the owners of the original recipe, and having the exclusive right to make and vend the pills.

Within a month subsequent to the death of the senior partner of the firm, his executors sold and conveyed all the interest of the decedent in the business to the surviving partner and the complainant, whereby they, under the firm name of "Fleming Brothers," acquired not only the title to the recipe and the right to make and vend the pills, but also the right to use the labels and trade-marks used by the former owners. Possessed of the whole interest, they (the firm, Fleming Brothers) prosecuted the business, with some changes in the individual partners, until July 1, 1865, when the present complainant sold out his whole interest to his brother, John Fleming, who, as sole proprietor of what the firm owned, continued the business until the 2d

of November, 1870, when he died, leaving a last will and testament.

When that firm acquired the entire interest, they immediately enlarged the business, and in the year 1855 they adopted the dark label, Exhibit F, which is fully and minutely described in the bill of complaint; and the complainant avers that it has since been used in the business, with no other substantial alterations than what are shown in Exhibit H, mentioned in the decretal order.

Both parties agree that the complainant, by the will of his deceased brother, acquired all the rights which the deceased had in the business; and the record shows that he has, since the probate of the will on the 9th of November, 1870, been preparing and vending said pills, and using the labels and trade-marks to designate their genuineness and to commend their value and utility.

Evidence was introduced by the respondent, whose name is James H. McLean, that he commenced in 1849, in St. Louis, to manufacture his own medicines; that in 1851 he began to manufacture and sell liver-pills, under the name of "Dr. McLean's Universal Pills," using first a type-printed label in red letters, which was changed, in 1852, to a lithographed red label, called in the decretal order "Exhibit L," which was used down to 1866, except that about 1863 he added to his name the initials "J. H.," so that the label read, "Dr. J. H. McLean's Universal Pills;" that in 1866 he changed his label to the one referred to in the decretal order as "Exhibit K," which he continued to use until May 21, 1872, when he adopted a new label, the use of which does not infringe the trade-mark of the complainant.

Governed by these facts as stated, the court will examine the first error assigned; which is, that the court erred in finding that the labels L and K infringed complainant's Exhibit H, as set forth in the decretal order. By the order, the respondent, James H. McLean, his agents, employés, and servants, are perpetually enjoined and restrained from using, or causing to be used, the words "Dr. J. H. McLean's Universal Pills or Vegetable Liver Pills," or the words "Dr. McLean's Universal Pills," upon any label or wrapper for boxes or other pack-

ages of pills resembling or in imitation of the labels, wrappers, or trade-mark of the complainant, described in his bill of complaint as "Exhibit H," whether in style of engraving, printing, or lettering; and from vending or exposing for sale, or causing to be vended or exposed for sale, any article of pills having upon the boxes or other packages thereof any such labels or wrappers so made in imitation of or resemblance to the said labels or wrappers of the complainant.

Equity gives relief in such a case, upon the ground that one man is not allowed to offer his goods for sale, representing them to be the manufacture of another trader in the same commodity. Suppose the latter has obtained celebrity in his manufacture, he is entitled to all the advantages of that celebrity, whether resulting from the greater demand for his goods or from the higher price the public are willing to give for the article, rather than for the goods of the other manufacturer, whose reputation is not so high as a manufacturer. Where, therefore, a party has been in the habit of stamping his goods with a particular mark or brand, so that the purchasers of his goods having that mark or brand know them to be of his manufacture, no other manufacturer has a right to adopt the same stamp; because, by doing so, he would be substantially representing the goods to be the manufacture of the person who first adopted the stamp, and so would or might be depriving him of the profit he might make by the sale of the goods which the purchaser intended to buy. *Seixo* v. *Provezende*, Law Rep. 1 Ch. 195.

What degree of resemblance is necessary to constitute an infringement is incapable of exact definition, as applicable to all cases. All that courts of justice can do, in that regard, is to say that no trader can adopt a trade-mark, so resembling that of another trader, as that ordinary purchasers, buying with ordinary caution, are likely to be misled.

Unreasonable delay in bringing a suit is always a serious objection to relief in equity; but cases arise in litigations of the kind before the court where the complainant may be entitled to an injunction to restrain the future use of a trade-mark, even when it becomes the duty of the court to deny the prayer of the bill of complaint for an account of past gains and profits. *Harrison* v. *Taylor*, 11 Jur. N. S. 408.

In such cases, the question is not whether the complainant was the original inventor or proprietor of the article made by him, and on which he puts his trade-mark, nor whether the article made and sold under his trade-mark by the respondent is equal to his own in value or quality, but the court proceeds on the ground that the complainant has a valuable interest in the good-will of his trade or business, and, having adopted a particular label, sign, or trade-mark, indicating to his customers that the article bearing it is made or sold by him or by his authority, or that he carries on business at a particular place, he is entitled to protection against one who attempts to deprive him of his trade or customers by using such labels, signs, or trade-mark without his knowledge or consent. *Coats* v. *Holbrook*, 2 Sandf. (N. Y.) Ch. 586; *Partridge* v. *Menck*, 2 Barb. (N. Y.) Ch. 101.

Everywhere courts of justice proceed upon the ground that a party has a valuable interest in the good-will of his trade, and in the labels or trade-mark which he adopts to enlarge and perpetuate it. Hence it is held that he, as proprietor, is entitled to protection as against one who attempts to deprive him of the benefits resulting from the same, by using his labels and trade-mark without his consent and authority. Decided cases to that effect are quite numerous, and it is doubtless correct to say that a person may have a right in his own name as a trade-mark as against a trader or dealer of a different name; but the better opinion is, that such a party is not, in general, entitled to the exclusive use of a name, merely as such, without more. *Millington* v. *Fox*, 3 Myl. & Cr. 338; *Dent* v. *Turpin*, 2 Johns. & Hem. 139; *Meneely et al.* v. *Meneely*, 62 N. Y. 427.

Instead of that, he cannot have such a right, even in his own name, as against another person of the same name, unless such other person uses a form of stamp or label so like that used by the complaining party as to represent that the goods of the former are of the latter's manufacture. Nor will any other name, merely as such, confer any such exclusive right, unless the name is printed in some particular manner in a label of some peculiar characteristics, so that it becomes, to some extent, identified with a particular kind of goods, or when the name is used by the party, in connection with his place of busi-

ness, in such a manner that it assumes the character of a trade-mark within the legal meaning of that term, and as such entitles the party to the protection of a court of equity, to prevent others from infringing the proprietor's exclusive right. *Gilman* v. *Hunnewell*, 122 Mass. 139; *Colladay* v. *Baird*, 4 Phil. (Pa.) 139; *Sykes* v. *Sykes*, 3 B. & C. 541; *Croft* v. *Day*, 7 Beav. 89; *Burgess* v. *Burgess*, 3 DeG., M. & G. 896; *Holloway* v. *Holloway*, 13 Beav. 209; *Rogers and Others* v. *Taintor*, 97 Mass. 291.

Much must depend, in every case, upon the appearance and special characteristics of the entire device; but it is safe to declare, as a general rule, that exact similitude is not required to constitute an infringement or to entitle the complaining party to protection. If the form, marks, contents, words, or the special arrangement of the same, or the general appearance of the alleged infringer's device, is such as would be likely to mislead one in the ordinary course of purchasing the goods, and induce him to suppose that he was purchasing the genuine article, then the similitude is such as entitles the injured party to equitable protection, if he takes seasonable measures to assert his rights, and to prevent their continued invasion. *James* v. *James*, Law Rep. 13 Eq. 425; *Singleton* v. *Bolton*, 3 Doug. 293; *Morrison* v. *Salmon*, 2 Man. & G. 385; *Boardman* v. *Meriden Britannia Co.*, 35 Conn. 413.

Such a proprietor, if he owns or controls the goods which he exposes to sale, is entitled to the exclusive use of any trade-mark adopted and applied by him to the goods, to distinguish them as being of a particular manufacture and quality, even though he is not the manufacturer, and the name of the real manufacturer is used as part of the device. *Walton* v. *Crowley*, 3 Blatchf. 440; *Emerson* v. *Badger*, 101 Mass. 82.

Equity courts will not, in general, refuse an injunction on account of delay in seeking relief, where the proof of infringement is clear, even though the delay may be such as to preclude the party from any right to an account for past profits. *Rodgers* v. *Rodgers*, 31 L. T. 285; *Blackwell* v. *Crabb*, 45 L. J. Pt. I. 505.

Positive proof of fraudulent intent is not required where the proof of infringement is clear, as the liability of the infringer

arises from the fact that he is enabled, through the unwarranted use of the trade-mark, to sell a simulated article as and for the one which is genuine. *Wotherspoon* v. *Currie*, Law Rep. 5 App. Cas. 512.

Nor is it necessary, in order to give a right to an injunction, that a specific trade-mark should be infringed; but it is sufficient that the court is satisfied that there was an intent on the part of the respondent to palm off his goods as the goods of the complainant, and that he persists in so doing after being requested to desist. *Woollam* v. *Ratcliff*, 1 Hem. & M. 259.

Apply these rules to the case, and it is clear that the charge of infringement is satisfactorily proved in this case.

Words or devices, or even a name in certain cases, may be adopted as trade-marks which are not the original invention of the party who appropriates the same to that use; and courts of equity will protect the proprietor against any fraudulent use or imitation of the device by other dealers or manufacturers. Property in the use of a trade-mark, however, bears very little analogy to that which exists in copyrights or in patents for new inventions or discoveries, as they are not required to be new, and may not involve the least invention or skill in their discovery or application. Phrases, or even words in common use, may be adopted for the purpose, if, at the time of their adoption, they were not employed by another to designate the same or similar articles of production or sale. Stamps or trade-marks of the kind are employed to point out the origin, ownership, or place of manufacture or sale of the article to which it is affixed, or to give notice to the public who is the producer, or where it may be purchased. *Canal Company* v. *Clark*, 13 Wall. 311.

Subject to the qualification before explained, a trade-mark may consist of a name, symbol, figure, letter, form, or device, if adopted and used by a manufacturer or merchant in order to designate the goods he manufactures or sells to distinguish the same from those manufactured or sold by another, to the end that the goods may be known in the market as his, and to enable him to secure such profits as result from his reputation for skill, industry, and fidelity. Upton, Trade-marks, 9; *Taylor* v. *Carpenter*, 2 Sandf. (N. Y.) Ch. 603; Coddington, Dig. 9.

Complainant's pills have been in the market as a vendible

article for more than forty years, and during that whole period have been sold under trade-marks of the forms heretofore sufficiently described, and they are still sold under the trade-mark mentioned in the decretal order.

Difficulty frequently arises in determining the question of infringement; but it is clear that exact similarity is not required, as that requirement would always enable the wrong-doer to evade responsibility for his wrongful acts. Colorable imitation, which requires careful inspection to distinguish the spurious trade-mark from the genuine, is sufficient to maintain the issue; but a court of equity will not interfere, when ordinary attention by the purchaser of the article would enable him at once to discriminate the one from the other. Where the similarity is sufficient to convey a false impression to the public mind, and is of a character to mislead and deceive the ordinary purchaser in the exercise of ordinary care and caution in such matters, it is sufficient to give the injured party a right to redress, if he has been guilty of no laches. *Amoskeag Manufacturing Co.* v. *Spear*, 2 Sandf. S. C. 599; Coddington, Dig. 109; *McAndrew* v. *Bassett*, 4 DeG., J. & S. 380.

Argument to show that the name of the pills, as given in the trade-mark of the respondent, was of a character to mislead and deceive, is scarcely necessary, as they are *idem sonans* in the usual pronunciation; nor can it be doubted that the form of the box containing the pills and the general appearance of the wrapper which surrounded it were calculated to have the same effect. Mention may also be made of the fact that the color of the label and the wax impression on the top of the box are well suited to divert the attention of the unsuspecting buyer from any critical examination of the prepared article.

Chancery protects trade-marks upon the ground that a party shall not be permitted to sell his own goods as the goods of another; and, therefore, he will not be allowed to use the names, marks, letters, or other *indiciæ* of another, by which he may pass off his own goods to purchasers as the manufacture of another. *Croft* v. *Day*, 7 Beav. 84; *Perry* v. *Truefitt*, 6 id. 66; *Newman* v. *Alford*, 51 N. Y. 192.

Witnesses in great numbers were called by the complainant, who testified that the Exhibits L and K of the respondent were

calculated to deceive purchasers; and the reasons given by them in support of the conclusion are both persuasive and convincing. Difference between those exhibits and Exhibits F and H of the complainant undoubtedly exist; and still it is manifest that the general appearance of the package in the respects mentioned, and others which might be suggested, is well calculated to mislead and deceive the unwary and all others who purchase the article without opening the box and examining the label. *Caswell et al.* v. *Davis*, 58 N. Y. 223.

Two trade-marks are substantially the same in legal contemplation, if the resemblance is such as to deceive an ordinary purchaser giving such attention to the same as such a purchaser usually gives, and to cause him to purchase the one supposing it to be the other. *Gorham Company* v. *White*, 14 Wall. 511.

Suffice it to say, without entering further into details, the court is of the opinion that the first assignment of error must be overruled, and that the injunction was properly granted to prevent infringement subsequent to the filing of the bill of complaint.

Suppose that is so, still the respondent contends that the court erred, as alleged in the second assignment of errors, and that the complainant is not entitled to an account, nor to a decree for gains, profits, or damages. Support to that proposition is attempted to be drawn from the long delay of the complainant, and those under whom he claims, to take any legal steps to protect their alleged rights. Opposed to that, it is insisted by the complainant that no such defence is open to the respondent, as it was not set up in the answer. Nothing of the kind is directly set up in the answer; but the respondent denies all intent to injure or defraud the complainant, and avers that he has been engaged during the last twenty years in perfecting his pills, and that he had no idea that his trade-marks infringed the trade-marks of the complainant.

Proofs were taken upon both sides upon the subject; and the respondent, in his petition for rehearing filed in the court below, expressly alleges that the immediate predecessor of the complainant was perfectly familiar with the pills manufactured by the respondent, and well knew that the respondent used the labels in question; that the agent of the complainant, May 20,

1872, called on the respondent and remonstrated with him for using the label Exhibit K, and that he on the following day adopted a different label, as therein fully explained.

Examined in the light of these suggestions, the court is of the opinion that the question presented in the second assignment of error is open for re-examination. *Sullivan* v. *Portland, &c. Railroad Co.*, 94 U. S. 806.

Repetition of the facts is unnecessary, as it sufficiently appears that the respondent has been engaged in preparing and selling his pills for more than forty years; that during that period, or more than half of it, he has been using labels and trade-marks corresponding more or less to those used by the predecessors of the complainant, some of whom, during all or most of that time, knew what the labels and trade-marks were which were used by the respondent, the evidence to that effect being full and decisive.

Negotiations took place at one time between the respondent and one of the predecessors of the complainant for an interchange of commodities, with a view that both commodities might be sold at each of their respective places of business.

Evidence of a decisive character is exhibited in the record to show that the complainant or his predecessor knew throughout what description of labels and trade-marks the respondent was using; and it does not appear that any objection was ever made, except as heretofore stated and explained. Once, the respondent was requested to insert the initials of his Christian name before his surname, in the label; and it appears that he immediately complied with the request.

Cases frequently arise where a court of equity will refuse the prayer of the complainant for an account of gains and profits, on the ground of delay in asserting his rights, even when the facts proved render it proper to grant an injunction to prevent future infringement. *Harrison* v. *Taylor*, 11 Jur. N. S. 408; Cox, Trade-marks, 541.

Relief of the kind is constantly refused, even where the right of the party to an injunction is acknowledged because of an infringement, as in case of acquiescence or want of fraudulent intent. *Moet* v. *Couston*, 33 Beav. 578; *Edelsten* v. *Edelsten*, 1 De G., J. & S. 185; *Millington* v. *Fox*, 3 Myl. & Cr. 398;

Myeth v. *Stone*, 3 Story, 284; *Beard* v. *Turner*, 13 Law Times, N. S. 747; *Estcourt* v. *Estcourt*, Law Rep. 10 Ch. 276; Coddington, Dig. 162; High, Injunc. 405.

Acquiescence of long standing is proved in this case, and inexcusable laches in seeking redress, which show beyond all doubt that the complainant was not entitled to an account nor to a decree for gains or profits; but infringement having been proven, showing that the injunction was properly ordered, he is entitled to the costs in the Circuit Court; but the decree for an account and for the supposed gains and profits being erroneous, the respondent, as appellant, is entitled to costs in this court. Browne, Trade-marks, sect. 497.

Decree as to the injunction and costs in the Circuit Court will be affirmed, but it will be reversed as to the decree for an account and as to the allowance for gains and profits, with costs in this court for the appellant; and the cause will be remanded with direction to enter a decree in conformity with the opinion of this court; and it is

So ordered.

RAILWAY COMPANY v. MCCARTHY.

1. The court reaffirms its former decisions, that a court is not bound to give instructions in the language in which they are asked. If those given sufficiently cover the case, and are correct, the judgment will not be disturbed.
2. Unless forbidden by its charter, a railroad company may contract for a shipment over connecting lines; and, having done so, is liable in all respects upon them as upon its own lines. In such a case, the shipper is authorized to assume that it has made the requisite arrangements to fulfil its obligations.
3. Where such a contract is not, on its face, necessarily beyond the scope of the powers of the corporation, it will, in the absence of proof to the contrary, be presumed to be valid.
4. The doctrine of *ultra vires*, when invoked for or against a corporation, should not be allowed to prevail, where it would defeat the ends of justice or work a legal wrong.
5. Where a party gives a reason for his conduct and decision touching any thing involved in a controversy, he is estopped, after litigation has begun, from changing his ground and putting his conduct upon another and different consideration.

ERROR to the Circuit Court of the United States for the Eastern District of Missouri.

This is an action by John McCarthy against the Ohio and Mississippi Railway Company, to recover damages alleged to have been sustained by him in consequence of negligence, carelessness, and delay on the part of the defendant in the execution of the following contract of affreightment: —

"This agreement, made this twenty-third day of September, A.D. 1873, between the Ohio and Mississippi Railway Company, party of the first part, and John McCarthy, party of the second part, witnesseth: —

"That the party of the first part will forward to the party of the second part the following freight: to wit, sixteen cars, more or less, from E. St. Louis to Philadelphia, at the rate of $130 per car, which is a reduced rate, made expressly in consideration of this agreement; in consideration of which the party of the second part agrees to take care of said freight while on the trip, at his or their own risk and expense; and that the party of the first part shall not be responsible for any loss, damage, or injury which may happen to said freight in loading, forwarding, or unloading, by suffocation or other injury caused by overloading cars, by escapes from any cause whatever, by any accident in operating the road, or delay caused by storm, fire, failure of machinery or cars, or obstruction of track from any cause, or by fire from any cause whatever, or by any other cause except gross negligence; and that said party of the first part and such connecting lines shall be deemed merely forwarders and not common carriers, and only liable for such loss, damage, injury, or destruction of freight as may be caused by gross negligence only, and not otherwise.

"Witness our hands and seals in duplicate.

"OHIO & MISSISSIPPI RAILROAD COMPANY. [SEAL.]
"By H. COPE, *Agent.*
"JOHN MCCARTHY." [SEAL.]

The facts in the case, as exhibited by the bill of exceptions, are set forth in the opinion of the court. They are, therefore, omitted here.

Upon the close of the testimony, the defendant requested the court to charge the jury —

1. That the plaintiff cannot recover damages for such loss, damage, or injury as was sustained by his cattle by loading, forwarding, or unloading; by suffocation or other injury caused by overloading cars; by escapes from any cause whatever; by

any accident in operating the road, or delay caused by failure of machinery or cars, or obstruction of track from any cause except gross negligence; or from any cause not occasioned by gross negligence on the part of the Ohio and Mississippi Railroad Company, or the Marietta and Cincinnati Railroad Company, or the Baltimore and Ohio Railroad Company.

2. That under the contract the plaintiff can only recover for such injuries or damages as the cattle sustained before they passed into the possession of the Marietta and Cincinnati Railroad Company.

3. That the plaintiff cannot recover for such injuries as his stock sustained after they passed into the possession of the Baltimore and Ohio Railroad Company at Parkersburg.

4. That it was not the duty of the defendant, or its connecting line, the Baltimore and Ohio Railroad Company, to start out from Parkersburg on Sunday with the plaintiff's cattle, and that the plaintiff cannot recover damages for failure to do so.

5. That the jury must find for the defendant, unless they shall believe from the evidence that the plaintiff was the sole owner of the cattle in controversy; and that if they shall believe from the evidence that Hensley was a part-owner of the cattle, or in the proceeds thereof, that they must find for the defendant.

6. That the plaintiff cannot recover for such injuries as the cattle sustained through the negligence of the defendant, or of the other railroad companies operating the connecting lines, provided that the negligence of the plaintiff, or his employés or agents, contributed thereto.

7. That if the jury shall find from the evidence that the cattle in controversy had been confined in the defendant's cars for a longer period than twenty-eight consecutive hours upon their arrival at Cincinnati, it was the duty of the defendant to unload them, for rest, water, and feeding; and the defendant cannot be made liable for that detention.

8. That if injuries were sustained in consequence of causes specified and excepted in the contract of shipment made at East St. Louis, then the burden of proof is upon the plaintiff to show that such injuries were occasioned by the negligence of the defendant.

The court gave the instructions embraced by the sixth, seventh, and eighth requests, but refused all the rest. To which refusal the defendant excepted.

The court thereupon, *sua sponte*, charged as follows: —

"The contract between the plaintiff and the defendant contemplates that the owner, through his own agents, should have the care and custody of the cattle throughout the entire route, — that is, the loading and unloading of them at the necessary intervals of rest, food, and water, — seeing that they were properly loaded and unloaded, and properly cared for.

"The defendant bound itself to transport safely, if it could be so done through the exercise of ordinary care and diligence on its part.

"Ordinarily, a common carrier, — that is, a railroad, — in the absence of a special contract of this kind, is held as an insurer. In other words, nothing that could be prevented by prudence or foresight is he excused from having done; and he must transport the cattle to their destination, unless something beyond his power and control prevents it. But that is not this contract. The parties to this suit presented a special contract for the transportation of the cattle in question; and it is for the jury to determine from the evidence whether the cattle were injured, or the plaintiff sustained any damages, in consequence of the gross neglect of the defendant or of the connecting railroads. The defendant was bound to exercise ordinary care and diligence in operating the railroad, so as to prevent injury to the cattle, arising from delays or otherwise.

By the terms of the contract, the care of the cattle devolved on plaintiff and his agents, and not on the defendants. For any injury to the cattle caused by the manner of loading or unloading the same, or by the nature of their habits, not caused by the negligence of the defendant in operating the railroad and cars, the plaintiff cannot recover. That is, if those cattle, from their very nature, among themselves hurt themselves, independent of what the railroad was doing, externally to the cars, the plaintiff cannot recover for that.

"The defendant contends that at Parkersburg the plaintiff, instead of sending forward the cattle, made a new and

independent contract with the Baltimore and Ohio Railroad Company; that for the transportation from Parkersburg to Baltimore the plaintiff made an entirely new contract, and did not go forward under the old contract; that he entered into a new contract with other parties, and under that contract he will have to look to the other parties for redress. But, on the other hand, the plaintiff contends that the Baltimore and Ohio Railroad Company refused to permit the cattle to go forward unless the alleged new contract was signed. If the alleged contract was signed by the plaintiff's agent as the sole means whereby the cattle could go forward, as the original contract with defendant contemplated, then the signing of that new paper at Parkersburg did not release or discharge the defendant from its obligations to send forward such cattle, as originally agreed, without unreasonable delay.

"The original contract was made upon the part of the Ohio and Mississippi Railroad to transport to Philadelphia, for a certain price per car, sixteen car-loads of cattle, the privilege being given to the plaintiff to sell as he pleased at Cincinnati or at Baltimore. Now, the Ohio and Mississippi Railroad took upon itself the sending of the cattle beyond its terminus at Cincinnati, and took the freight for the whole distance, and was bound to see that the cattle were carried the whole distance. It made the agreement, and must see it executed.

"Consequently, if when under that agreement those cars reached Parkersburg, this intermediate road, which was the agent, the Baltimore and Ohio Road, refused to take the cattle forward despite the agreement with the Ohio and Mississippi Railroad, unless the plaintiff would sign a paper whereby he would exonerate it from any thing that might happen; if, then, the plaintiff signed, or his agent signed, the paper under those circumstances, as the only means of getting those cattle forward, that defence avails nothing.

"The transportation of cattle for long distances has caused, for its protection, recent legislation by Congress. That legislation requires, under a penalty, that cattle transported over railroads shall, in the absence of unavoidable delays by storm or accident, have a rest for at least five consecutive hours, for each

run of twenty-eight hours. In other words, cattle shall not be confined in cars for more than twenty-eight consecutive hours, without giving them at least five consecutive hours for rest, food, and water. An act very important, though it is not involved directly in this case. You have heard a great deal about the forty-four hours' run in this case. Every effort to do that is a violation of the express law of the land, unless occasioned by storm or accident.

"In the transit from East St. Louis to Baltimore, in obedience to the law of the land, a delay which said law requires is not an unreasonable delay for which the defendant is chargeable It was bound to obey the law; and that amount of delay is not a reasonable delay, but a required delay. For all such delays as occurred in that run, pursuant to law, it, so far as being amenable to this plaintiff, is justified, for it was bound by law to make such delays; and the plaintiff himself, having custody of the cattle, is subject to a penalty if he transported the cattle for a longer run than twenty-eight hours without giving them, after that, five full hours' rest. So, in computing this question of unreasonable delay, you will bear in mind they were bound to give five consecutive hours for every twenty-eight hours run.

"It is, therefore, for the jury, in the light of said requirements of law, for such delays, to determine whether there was, in addition thereto, any unreasonable delays caused by negligence on the part of the defendant or the other roads. Take into consideration the distance to be travelled, and the usual and ordinary modes of transportation in such cases. The main question, then, is, whether the cattle were injured from the negligence of the defendant or any of the intermediate lines, without the plaintiff or his agents contributing thereto. If both parties contributed to the injury, neither party can recover from the other."

To the said charge and statement of facts by the court made to the jury, and to the several propositions therein announced by the court as the law of the case, the defendant then and there excepted.

There was a verdict and judgment for the plaintiff, whereupon the company brought the case here.

Mr. D. W. Paul for the plaintiff in error.

The plaintiff in error was only a forwarder. In the absence of any special contract, it was, therefore, only bound to carry the cattle safely and securely over its own road, and, at its terminus, deliver them to the succeeding company, with suitable directions for their carriage the rest of the way. *Railroad Company* v. *Manufacturing Company*, 16 Wall. 318; *Railroad Company* v. *Pratt*, 22 id. 123; Story, Bailments, sect. 448; *Reed* v. *United States Express Co.*, 48 N. Y. 462; *Inhabitants, &c.* v. *Hall et al.*, 61 Me. 519; *Hooper* v. *Wells, Fargo, & Co.*, 27 Cal. 40.

The plaintiff in error cannot be held liable for the failure of its connecting line, the Baltimore and Ohio Railroad Company, to forward the cattle from Parkersburg on Sunday. Code of West Virginia (1868), p. 694, c. 149, sects. 16, 17; *Pate* v. *Wright et al.*, 30 Ind. 476; *Powhatan Steamboat Co.* v. *Appomattox Railroad Co.*, 24 How. 247.

Mr. John D. S. Dryden, contra.

MR. JUSTICE SWAYNE delivered the opinion of the court.

The defendant in error was the plaintiff in the court below. He brought this action to recover damages from the railroad company for alleged breaches of a contract entered into by the parties on the 23d of September, 1873, for the transportation by the company of sixteen car-loads of cattle from East St. Louis to the city of Philadelphia. It was stipulated that McCarthy should have the entire care and charge of the cattle during the trip; that he should load and unload them; that the company should be deemed forwarders and not common carriers; and that it should be liable only for loss or injuries caused by its gross negligence. The cattle were shipped, accordingly, at East St. Louis, under the care of Hensley, an employé of McCarthy. They were transported thence by the defendant's road to Cincinnati, thence by the Marietta and Cincinnati road to Parkersburg, in West Virginia, and thence by the Baltimore and Ohio road to Baltimore. There the performance of the contract terminated. The plaintiff gave evidence tending to prove the following state of facts: Between East St. Louis and Cincinnati there was unnecessary delay and serious

injury to the cattle, arising from the gross negligence of the company's servants. At Cincinnati, Hensley sold forty of the cattle. This was done because, by reason of the injuries they had received, they were unfit for further transportation. Between Cincinnati and Parkersburg there was further unnecessary delay, arising from the same cause which produced it between East St. Louis and Cincinnati. The cattle arrived at the latter place five hours behind the proper time. Hensley insisted that they should be shipped for Baltimore on the morning of the next day, which was Sunday. The Baltimore company received but refused to forward them until Monday morning; and refused to ship them at all, until Hensley signed a new and onerous contract touching their transportation upon the Baltimore road. He at first refused; but, there being no other means of transportation east, he was constrained to submit, and signed under protest.

The defendant company gave evidence tending to contradict the plaintiff's evidence on all these points. It was expressly proved that the Baltimore company "was not able to send the cattle out of Parkersburg on Sunday, because they had not the necessary cars therefor at the time, and that they were sent at the first opportunity, which was on Monday morning."

The evidence as set forth in the bill of exceptions is wholly silent as to any other reason for not making the shipment on Sunday.

The testimony being closed, the company's counsel submitted sundry instructions, and prayed that they should be given to the jury. A part was given and a part refused. Proper exceptions were taken as to the latter. Finally, the court instructed the jury at large according to its own views.

There is no question presented in the record as to the sufficiency of the pleadings, or the admission or rejection of testimony. The exceptions and the assignments of error are confined to the instructions refused and to those given by the court *sua sponte*.

It has been repeatedly determined by this tribunal that no court is bound to give instructions in the forms and language in which they are asked. If those given sufficiently cover the

case, and are correct, the judgment will not be disturbed, whatever those may have been which were refused.

We have examined the charge of the learned judge who tried the case below, and are entirely satisfied with it. It was full, clear, and unexceptionable. It submitted the case well and fairly to the jury, and was quite as favorable to the company as the company had a right to demand.

We have found no error in it.

There are a few points, and only a few, to which we deem it necessary particularly to advert: —

The suit was well brought by McCarthy. The only testimony as to the ownership of the cattle was given by him. He said, "William Hensley, besides myself, was interested in the cattle. He had a half-interest in the profits. I was the owner." If Hensley had been joined with McCarthy as a plaintiff, there must, upon this testimony, have been an amendment, by striking his name from the record, or the action must have failed. The facts called for no instruction, and the court properly refused to give any.

The contract with the defendant was for the transportati of the cattle the entire distance they were to go. It was sti lated that the company would forward "sixteen cars, more less, from East St. Louis to Philadelphia, at the rate of $130 car, which is a reduced rate, made expressly in consideratio of this agreement." No other company was named, there was no mention of compensation to any other party, and nothing was said of a change to the cars of any other company on the way. Such corporations, unless forbidden by their charters, have the power to contract for shipments the entire distance over any connecting lines. *Railroad Company* v. *Pratt* (22 Wall. 123) is conclusive in this court upon the subject. The principle is so well settled in this country, that a further citation of authorities in support of it is unnecessary. Such is also the rule of the English law. Both here and there the company is liable in all respects upon the other lines as upon its own. In such cases, the public has a right to assume that the contracting company has made all the arrangements necessary to the fulfilment of the obligations it has assumed. *The Great Western Railway Co.* v. *Blake*, 7 H. & N. 986: *Weed* v. *Railroad Com-*

pany, 19 Wend. (N. Y.) 534; *Knight* v. *Portland, Saco, & Portsmouth Railroad Co.*, 56 Me. 234. When a contract is not on its face necessarily beyond the scope of the power of the corporation by which it was made, it will, in the absence of proof to the contrary, be presumed to be valid. Corporations are presumed to contract within their powers. The doctrine of *ultra vires*, when invoked for or against a corporation, should not be allowed to prevail where it would defeat the ends of justice or work a legal wrong. *Union Water Co.* v. *Murphy's Flat Fluming Co. et al.*, 22 Cal. 620; *Morris Railroad Co.* v. *Railroad Company*, 29 N. J. Eq. 542; *Whitney Arms Co.* v. *Barlow et al.*, 63 N. Y. 62. There is no conflict in the evidence as to the terms of the contract. It is all one way, and leaves no room for doubt.

The contract contains some provisions in favor of the company, to which we have not adverted. They do not appear to have been challenged in the court below, and have not been here. They are, therefore, not before us for consideration, and we pass them by without remark.

It does not appear that Hensley had any authority to enter into the contract forced upon him at Parkersburg. The original contract included the Baltimore road. The Parkersburg contract could not, therefore, in any wise, affect his rights with respect to the defendant. The court instructed the jury properly on the subject. It must be laid out of view as an element in the case.

The question made by the company upon the Sunday law of West Virginia does not, in our view, arise in this case. We have already shown that the defendant proved upon the trial that it was impossible to forward the cattle on Sunday, for want of cars. And it is fairly to be presumed that no other reason was given for the refusal at that time. It does not appear that any thing was then said as to the illegality of such a shipment on the Sabbath. This point was an after-thought, suggested by the pressure and exigencies of the case.

Where a party gives a reason for his conduct and decision touching any thing involved in a controversy, he cannot, after litigation has begun, change his ground, and put his conduct upon another and a different consideration. He is not per-

mitted thus to mend his hold. He is estopped from doing it by a settled principle of law. *Gold* v. *Banks*, 8 Wend. (N. Y.) 562; *Holbrook* v. *White*, 24 id. 169; *Everett* v. *Saltus*, 15 id. 474; *Wright* v. *Reed*, 3 Durnf. & E. 554; *Duffy* v. *O'Donovan*, 46 N. Y. 223; *Winter* v. *Coit*, 7 id. 288. The judge below committed no error in refusing to charge as requested upon this subject.

Judgment affirmed

WHEELER v. NATIONAL BANK.

Suit by a national bank upon a bill of exchange. Defence, usury. The bank, in discounting the bill, reserved a greater amount than was allowed for interest by the law of the State where it was situated. There was no proof of the current rate of exchange. *Held*, that the bank was entitled to recover.

ERROR to the Superior Court of the city of New York.

This suit was brought by the Union National Bank of Pittsburg, Pa., against George M. Wheeler, as indorser of two bills of exchange, one dated Jan. 20, 1871, for $10,000, and one dated March 8, 1871, for $5,000, drawn by Slack, superintendent of the Brady's Bend Iron Company, on and accepted by the treasurer of said company, pursuant to authority vested in him for that purpose, and payable sixty days after their respective dates at the American Exchange National Bank of New York. The plaintiff discounted both bills for the benefit of the company: the first on the twenty-fourth day of January, 1871, and the second on the day of its date, — the company receiving the amount mentioned in the bills, less the sum of $246.

The rate of interest in Pennsylvania was six per cent per annum.

Said bills were duly protested for non-payment, and notice given to the defendant. There was no proof of the rate of exchange when they were discounted.

There was a judgment in favor of the bank, which was affirmed by the Court of Appeals of the State of New York, and the record remitted to the inferior court. Wheeler then brought the case here by a writ of error.

Mr. Thomas M. Wheeler for the plaintiff in error.
Mr. Joseph M. Dixon, contra.

MR. JUSTICE HARLAN delivered the opinion of the court.

The controlling question presented in this case for our determination involves the construction of the National Currency Act of June 3, 1864 (13 Stat. 108), which declares that "the knowingly taking, receiving, reserving, or charging a rate of interest greater" than that "allowed by the laws of the State or Territory where the bank is located," shall be "held and adjudged a forfeiture of the entire interest which the bill, note, or other evidence of debt carries with it, or which has been agreed to be paid thereon." The same section also declares: "But the purchase, discount, or sale of a *bona fide* bill of exchange, payable at another place than the place of such purchase, discount, or sale, at not more than the current rate of exchange for sight drafts in addition to the interest, shall not be considered as taking or receiving a greater rate of interest."

Wheeler, the plaintiff in error, was sued as indorser upon two bills of exchange, drawn at Brady's Bend, Pa., payable sixty days after date at the American Exchange Bank, in New York, and discounted by the Union National Bank of Pittsburg for the benefit of the Brady's Bend Iron Company, a corporation created under the laws of Pennsylvania. Wheeler claims that the bank, under the provisions of the statute, forfeited the entire interest which the bills carried, or which was agreed to be paid. This claim was denied: first, in the Superior Court for the city and county of New York, where this action was commenced; and, subsequently, in the Court of Appeals of that State.

No question having been raised as to the *bona fide* character of the bills, the bank had, by the express words of the statute, the right to charge and receive the current rate of exchange for sight drafts, in addition to interest at the rate of six per cent per annum, which is the rate fixed by general statute in the State of Pennsylvania. But, upon examining the special finding of facts upon which the State court based its judgment, we discover no evidence of the current rate of exchange at the date

of discount. That exchange was, in fact, charged cannot be gainsaid by Wheeler, since he avers, in his answer, that the bills were discounted under an usurious agreement that the bank should receive, in addition to certain interest in excess of the statutory rate, commissions or exchange of one-quarter of one per cent. No such agreement was, however, proven. Indeed, the record furnishes no evidence of any distinct agreement, either as to the amount of interest or exchange to be reserved by the bank upon discounting the bills. Nothing seems to have been said at the time of discount as to the amount to be reserved by way of interest or upon the subject of exchange, and the court refused, upon the request of Wheeler, to find it as a fact in the case, that "no exchange was charged." While it may be inferred that exchange was charged by the bank, we are uninformed by the record whether it exceeded the current rate for sight drafts.

The statute should be liberally construed to effect the ends for which it was passed; but a forfeiture under its provisions should not be declared, unless the facts upon which it must rest are clearly established. It should appear affirmatively that the bank knowingly received or reserved an amount in excess of the statutory rate of interest, and the current exchange for sight drafts. There is no proof of the rate of exchange; and, since the courts uniformly incline against the declaration of a forfeiture, the party seeking such declaration should be held to make convincing proof of every fact essential to forfeiture.

It is unnecessary to consider any other question in the case.

Judgment affirmed.

TOWNSHIP OF ROCK CREEK v. STRONG.

1. The act of the legislature of Kansas, entitled "An Act to authorize counties, incorporated cities, and municipal townships to issue bonds for the purpose of building bridges, aiding in the construction of railroads, water-power, or other works of internal improvement, and providing for the registration of such bonds, and the repealing of all laws in conflict therewith," approved March 2, 1872 (c. 68, Laws of Kansas, 1872, p. 110), authorizes a township to issue its bonds to aid in constructing within its limits the depots and side-tracks of an existing railroad.
2. The provisions of that act, that the bonds shall be payable in not less than five nor more than thirty years from the date thereof, with interest not to exceed ten per cent per annum, all in the discretion of the officers issuing the same, are directory, and not of the essence of the power to issue.
3. Certain municipal bonds, dated Sept. 10, 1872, and payable thirty years from Oct. 15, 1872, with interest thereon at the rate of seven per cent per annum, payable semi-annually on the fifteenth days of April and October of each year, were registered by the auditor of the State Oct. 17, 1872. *Held*, that their legal effect is precisely what it would have been had the date inserted been Oct. 15 instead of Sept. 10, 1872.
4. The action of the persons or the tribunal authorized by law to determine the result of an election held for the purpose of ascertaining whether a municipal township shall issue its bonds in aid of an object authorized by law is conclusive, and a *bona fide* purchaser of the bonds is under no obligation to look beyond it.
5. A municipal bond, on the back of which is indorsed the certificate of the auditor of the State that it has been duly registered in his office according to law, is not invalid because he failed to make in his office an entry of his action.

ERROR to the Circuit Court of the United States for the District of Kansas.

This was an action by Strong, against the township of Rock Creek, Jefferson County, Kansas, upon interest coupons attached to bonds issued by it to aid in constructing within its limits the depots and side-tracks of the Atchison, Topeka, and Santa Fé Railroad. The bonds refer to the act of the legislature under which they were issued, and are of tenor following: —

"$1,000.] UNITED STATES OF AMERICA. [No. ——.

"ROCK CREEK TOWNSHIP RAILROAD AND DEPOT BONDS.

"*State of Kansas, County of Jefferson.*

"Thirty years from the fifteenth day of October, 1872, the township of Rock Creek, in the county of Jefferson and State of Kansas,

for value received, promises to pay to the Atchison, Topeka, and Santa Fé Railroad Company, or bearer, the sum of $1,000, in lawful money of the United States, with interest from the said fifteenth day of October, 1872, at the rate of seven (7) per cent per annum, payable semi-annually on the fifteenth days of April and October of each year, upon the presentation and surrender, as they severally become due, of the proper coupons therefor hereto attached, both principal and interest payable at the Fourth National Bank in the city of New York, and State of New York.

"This bond is one of a series, amounting to the sum of $20,000, made and issued to the said Atchison, Topeka, and Santa Fé Railroad Company in payment of a subscription and donation to the said company in aid of the construction of its railroad depots and side-tracks, in said township, under and in pursuance of the provisions of an act of the legislature of the State of Kansas, entitled 'An Act to authorize counties, incorporated cities, and municipal townships to issue bonds for the purpose of building bridges, aiding in the construction of railroads, water-power, or other works of internal improvement, and providing for the registration of such bonds, the registration of other bonds, and the repealing of all laws in conflict therewith,' approved March 2, 1872; and the faith of the said township is hereby pledged for the redemption and payment of said bonds and the interest coupons thereto attached.

"In testimony whereof, the township trustee and clerk of said Rock Creek township have hereunto set their hands as such trustee and clerk, as by law it is provided shall be done, this tenth day of September, A.D. 1872.

"N. A. LAFON, *Trustee.*

"Attest: ALBERT OWEN, *Clerk.*"

Indorsed on the back thereof as follows: —

"STATE OF KANSAS, ss.

"I, auditor of the State of Kansas, do hereby certify that this bond has been regularly and legally issued, and the signatures thereto are genuine, and that the same has been duly registered in my office according to law.

"In witness whereof, I have hereunto set my hand and affixed my seal of office, at the city of Topeka, this seventeenth day of October, A.D. 1872.

[L. S.] "A. THOMAN, *Auditor.*"

The coupons are in the usual form.

The plaintiff having at the trial introduced evidence tending

to show that he was an innocent purchaser for value of the coupons before maturity, the defendant offered evidence tending to show, —

1. That the only election held in the township upon any proposition of issuing the bonds was one held Aug. 27, 1872, pursuant to the notice of the trustee and clerk of the township, dated July 30, of that year, for the purpose of submitting to the qualified voters of the township "the question of aiding in the construction of two permanent depots, with side-tracks to accommodate the same, on the line of the Atchison, Topeka, and Santa Fé Railroad, in said township, by a donation to the Atchison, Topeka, and Santa Fé Railroad Company of the bonds of said township, in the sum of $20,000, to be issued in sums of $1,000 each, payable in thirty years from the date of issue, payable in the city of New York, and bearing interest at the rate of seven per cent per annum, payable semi-annually in the city of New York, signed by the trustee of said township and attested by the township clerk, and upon the following conditions, to wit: Said bonds to be issued as aforesaid, and delivered to the said company whenever said company shall have constructed and completed said depots and said side-tracks in said township, the same to be located as follows, to wit: one depot at some point within one-half of one mile of the point where said company's railroad intersects the line between the north-east quarter of the south-east quarter of section twenty, township nine, in range seventeen east; and the other depot at a point within one-half of one mile of the point where said company's railroad intersects the west boundary line of section seven, in township ten, range seventeen east, and each to be accommodated with side-tracks suitable and of sufficient length for the accommodation of the business to be done at said depots, the said company to erect said depots and each of them, and to construct the said side-tracks of the same, so that the same shall be ready for use, and the reception of business thereat, on or before the fifteenth day of October, A.D. 1872; otherwise, the said company to forfeit all claims to the said bonds." That the total number of votes cast by qualified electors of said township was one hundred and two, of which fifty-one were for, and fifty-one were against, the said proposition; and that one

Rice, who was not a qualified elector of said township, cast his vote in favor of said proposition.

2. That the board of county commissioners of said county never canvassed the returns of said election, and never determined nor declared the result of any election in said township to be in favor of issuing any of the bonds of said township; but upon the records of the county the following entry, certified in due form, was made prior to the issue of the bonds: —

"FRIDAY, Aug. 30, 1872. At this, a called meeting of the board, there were present H. W. Wellman and P. M. Gilbert.

"The board proceeded to canvass the vote of Rock Creek township, on the proposition to donate the bonds of said township to the Atchison, Topeka, and Santa Fé Railroad Company, and determine the following as a result of said election: —

"For the issuing of said bonds	52	votes.
Against the issuing of said bonds . .	51	"
"Total	103	"

"Adjournment: Upon motion, it was ordered that the board adjourn, to meet Monday, Sept. 2, 1872."

3. That there is not now, and never has been, in the office of the auditor of the State of Kansas, any registration of any such bonds of said township; but his certificate of registration was placed on them.

4. That the depots and side-tracks mentioned in said bonds were located and erected upon and appurtenant to a railroad built and in operation through said township prior to said election.

Whereupon the following questions arose, upon which the judges were divided in opinion: —

1. Does the act of the legislature of the State of Kansas, referred to in said bonds, authorize the issue of the bonds of a township to aid in the construction of depots and side-tracks, as recited in the bonds in suit?

2. Are the bonds mentioned in plaintiff's petition void, for the reason that they are made payable thirty years and thirty-five days from their date of execution therein written, but only drawing interest for the last thirty years of said time?

3. Is the defendant estopped by the recitals in said bonds from introducing the testimony as above stated?

4. On the foregoing facts, is the plaintiff entitled to recover?

Judgment having been entered in favor of the plaintiff, in accordance with the opinion of the presiding judge, the defendant sued out this writ of error.

Mr. George R. Peck for the plaintiff in error.

There being no express authority conferred by the act of March 2, 1872, for a municipal township in Kansas to issue its bonds in aid of the construction of depots and side-tracks for a railroad which was then built, any doubt as to the existence of the power supposed to be conferred must be resolved against it. *Minturn* v. *Larue*, 23 How. 435; *Thompson* v. *Lee County*, 3 Wall. 327; *Thomas* v. *City of Richmond*, 12 id. 349.

The legislature did not intend to confer such authority, as it is the legal duty of a railroad corporation to furnish the necessary depots and side-tracks for the accommodation of the public. *St. Joseph & Denver City Railroad Co.* v. *Ryan*, 11 Kan. 602; *Pacific Railway Co.* v. *Seeley*, 45 Mo. 212.

The objects in aid of which the bonds were issued cannot be claimed to be works of internal improvement, within the meaning of that act. *Township of Burlington* v. *Beasley*, 94 U. S. 310.

The bonds having been issued for a period of time in excess of that fixed by law, they are void on their face. *Commissioners of Marion County* v. *Clark*, 94 U. S. 278. The presumption is that they were delivered on the day of their date. 1 Pars. Bills and Notes, 42; Edwards, Bills, 144; *Anderson* v. *Weston*, 6 Bing. N. C. 296.

The plaintiff in error was not estopped by the recitals in the bonds from showing that the conditions precedent to their issue had not been complied with, because the right to determine those questions was vested in an entirely different tribunal from the one authorized to issue the bonds. *Town of Coloma* v. *Eaves*, 92 U. S. 484.

The record shows that the bonds were never registered as required by the statute. They were, therefore, not negotiable. Negotiability could be imparted to them only by the fact of registration, not by the mere certificate of the auditor.

Mr. H. Strong, for the defendant in error, in support of the judgment below, cited *Leavenworth* v. *Miller*, 7 Kan. 536; *Knox County* v. *Aspinwall*, 21 How. 544; *Moran* v. *Miami County*, 2 Black, 732; *Mercer County* v. *Hackett*, 1 Wall. 83; *Supervisor* v. *Schenck*, 5 id. 784; *Town of Coloma* v. *Eaves*, 92 U. S. 484; *Town of Venice* v. *Murdock*, id. 494; *Converse* v. *Fort Scott*, id. 503; *Marcey* v. *Town of Oswego*, id. 637; *Humboldt Township* v. *Long*, id. 642; *Leavenworth County* v. *Barnes*, 94 id. 70; *Douglass County* v. *Bolles*, id. 104; *Johnson County* v. *January*, id. 202; *Township of Burlington* v. *Beasley*, id. 310; *County of Moulton* v. *Rockingham Bank*, id. 631; *Town of East Lincoln* v. *Davenport*, id. 801.

MR. JUSTICE STRONG delivered the opinion of the court.

The act of the Kansas legislature approved March 2, 1872, expressly authorized the issue of township bonds "to aid in the construction of railroads or water-power, by donation thereto, or the taking of stock therein, or for other works of internal improvement." Like all expressions of legislative will, this provision of the act must receive a reasonable construction, and we cannot doubt that in the grant of power to aid in the construction of railroads or other works of internal improvement is included authority to assist in the construction of depots and side-tracks of a railroad. Such constructions are constituents, — essential parts of every railroad, without which it would be incomplete and incapable of serving the uses for which it is intended. The cost of building them is always, and properly, charged to construction account, and not to repairs or expenses of operation; and a mortgage of a railroad, without further description than such as is necessary to identify it, covers its side-tracks and depots.

We do not see any force in the argument pressed upon us by the plaintiff in error, that, because it was the duty of the railroad company to furnish suitable side-tracks and depots, the act of 1872 cannot be construed as authorizing the issue of township bonds to aid in building such structures. It was equally the duty of the company to build the main line, and it is not questioned that the township was empowered to aid in doing that work. Nor is there any thing in the proviso to the act that

tends in the least degree to the conclusion that the legislature did not mean to authorize aid to the building of depots.

The first question certified to us was, therefore, correctly answered by the Circuit Court in the affirmative, and the first assignment of error is overruled.

The second question certified is, "Are the bonds mentioned in the plaintiff's petition void, for the reason that they are made payable thirty years and thirty-five days from their date of execution therein written, but only drawing interest for the last thirty years of said time?"

The second section of the act authorizing their issue enacted that the bonds should be payable in not less than five nor more than thirty years from the date thereof, with interest not to exceed ten per cent per annum, all in the discretion of the officers issuing the same. These provisions were obviously directory, and not of the essence of the power. The bonds issued were dated Sept. 10, 1872, made payable thirty years from the fifteenth day of October, 1872, with interest thereon from that time at the rate of seven per cent. When they were delivered to the railroad company does not appear, though they were not registered by the auditor of the State until Oct. 17, 1872. They were thus practically thirty-year bonds, bearing a less rate of interest than the rate authorized. Their legal effect is precisely what it would have been had the date inserted been Oct. 15, instead of Sept. 10, 1872. Substantially, therefore, the legislative direction was followed. The doctrine of *Commissioners of Marion County* v. *Clark* (94 U. S. 278) is applicable to the present case.

The third assignment of error is that the court erred in not holding the township was not estopped by the recitals in the bonds from introducing the testimony offered. The bonds were executed by the township trustee, and attested by the township clerk. These were the officers designated by the statute to execute such bonds. The recitals were that the bonds were made and issued in pursuance of the provisions of the act of the legislature of March 2, 1872. But whether the recitals were an estoppel against showing what the defendant proposed to show, or whether they were not, is quite immaterial in this case. The proof offered was, that, in the records of the county

commissioners of the county of which Rock Creek township is a part, it appeared the board had canvassed the vote at the election held to determine whether the township should issue the bonds, and had determined the result to be, for the issue, fifty-two votes, against the issue, fifty-one votes, making one hundred and three votes in all cast; but that in fact no canvass was made, and that only one hundred and two votes were cast, fifty-one of which only were in favor of issuing the bonds, and that one person who voted in favor was not a qualified elector.

Now, if the town clerk and treasurer were not the persons authorized by law to determine the result of the election, the board of county commissioners were, and their action, according to all our rulings, was conclusive. A *bona fide* purchaser of the bonds was under no obligation to look beyond it. It was not his duty to canvass the vote, much less to ascertain whether those who had voted were qualified electors. The law cast the duty upon the board, and in such a case the action of the board must be found in their records. If it be admitted that the purchaser of the bonds was under obligation to inquire whether an election had been held, and what its result was, the only place to which he could resort for the information sought was the records of the board; and, had he sought there, he would have found that the township clerk and treasurer could rightfully issue the bonds. It follows that the evidence offered by the defendant was quite immaterial, or, if not, that it was destructive to his defence.

The defendant further offered to show that no registration of the bonds exists, or ever has been in the office of the auditor of the State, though the auditor's certificate of registration does appear upon the bonds. We cannot think this evidence, if admitted, could in any degree avail the defendant.

The certificate of that officer indorsed on the bonds was all that was required for the holder of them. If the State auditor failed to make in his office an entry of his action, we do not perceive how his failure in this respect can invalidate bonds upon which he has certified a registration.

Judgment affirmed.

CONRAD v. WAPLES.

1. The act of July 17, 1862 (12 Stat. 589), so far as it related to the confiscation of property, applied only to the property of persons who thereafter might be guilty of acts of disloyalty and treason; and it reached only the estate of the party for whose offences the property was seized.
2. Until some provision was made by law for the condemnation of property in land of persons engaged in the rebellion, the courts of the United States could not decree a confiscation of it, and direct its sale.
3. Such persons were not denied the right of contracting with and selling to each other; as between themselves, all the ordinary business could be lawfully carried on, except in cases where it was expressly forbidden by the United States, or would have been inconsistent with or have tended to weaken its authority.
4. The purpose of the United States to seize and confiscate the property of certain classes of persons engaged in the rebellion having been declared by the act of July 17, 1862, sales and conveyances of property subsequently made by them could only pass a title subject to be defeated, if the government should afterwards proceed for its condemnation. The fact that the property sold and conveyed was at the time within the territory occupied by the Federal troops, created no other legal impediment to the transfer.
5. The provision in that act, that "all sales, transfers, or conveyances" of property of persons therein designated shall be null and void, only invalidates such transactions as against any proceedings taken by the United States for the condemnation of the property. They are not void as between the parties, or against any other party than the United States. The case of *Corbett* v. *Nutt* (10 Wall. 464) cited on this point, and approved.
6. A sale by public act, before a notary within the insurrectionary territory, of land in the city of New Orleans by one enemy to another for a valuable consideration, previous to the passage of the Confiscation Act, passed the title to the purchaser, which was not affected by subsequent judicial proceedings for its condemnation for alleged offences of the vendor. The case of *Fairfax's Devisee* v. *Hunter's Lessee* (7 Cranch, 603) cited and approved.
7. An actual delivery of immovables in Louisiana is not essential to the validity of a sale of them made by public act before a notary. The law of the State considers the tradition or delivery of the property as accompanying the act.

ERROR to the Circuit Court of the United States for the District of Louisiana.

This was an action for the recovery of certain real property, described in the petition of the plaintiff, situated in the city of New Orleans, and of the rents and profits. The plaintiff claimed title to the premises by a conveyance from his father, Charles M. Conrad, made to himself and his brother on the 6th of May,

1862, and a subsequent conveyance to himself of his brother's interest. The conveyance of the father was made in settlement and discharge of certain obligations resting upon him under the laws of Louisiana, by reason of his having received, as the natural tutor of his children, property belonging to them as minor heirs of their deceased mother. It appears from the record that she died intestate, at New Orleans, in 1839, leaving the plaintiff and his brother her only heirs, and an estate valued at a sum over $35,000. The estate consisted principally of her separate property; a small portion was her share of the real property belonging to the matrimonial community. The surviving husband qualified, and was confirmed as the natural tutor of the children, and took charge of their property. The law of Louisiana imposes a general mortgage upon all the property of a tutor, to secure the interests of minors and his faithful execution of the trust, but gives him the right to substitute in place of it a special mortgage upon particular parcels of his property. The tutor here availed himself of this right at different times. The last special mortgage was executed in 1847, and, with other property, covered the premises in controversy. Previously to this, and in 1845, his indebtedness to his sons had been ascertained, and fixed by decree of the Probate Court at the sum of $26,757. This amount was subsequently increased.

No account of his administration was ever rendered by the tutor until May 6, 1862, when a settlement took place between him and his sons; and, in discharge of his obligations to them, he executed, before the recorder and *ex-officio* notary-public of the parish of St. Helena, a public act of sale, by which he sold and conveyed to them several lots situated in New Orleans, and among them the one in controversy in this case. This act of sale, which purports to have been recorded in the city of New Orleans on the 31st of the same month, the court refused to admit in evidence.

The defendant, Waples, in his answer, asserted title to the premises in controversy, under a deed to him by the marshal of the United States, executed in March, 1865, upon a sale under a decree of the District Court, rendered in February of that year, condemning and forfeiting the property to the United States, as that of Charles M. Conrad, in proceedings taken under

the Confiscation Act of July 17, 1862. The other defendants disclaimed title.

On the 1st of May, 1862, New Orleans passed into the possession of the army of the United States; and, on the 6th of the month, General Butler, commanding our forces there, issued a proclamation re-establishing the national authority in the city. The proclamation bears date on the 1st of May, but was not published until the 6th. The Conrads, father and sons, had left the city before it was captured. They had previously been engaged in the rebellion against the United States, — the father as a member of the Confederate Congress, and the sons as officers of the Confederate army, — and they continued in such rebellion until the close of the war. The parish of St. Helena was within the Confederate lines when the act of sale of May 6, 1862, was executed. When this act was offered in evidence by the plaintiff, objection was made to its introduction, on substantially the following grounds: 1. That the act was not a sale, but a giving in payment; and that no delivery of the property was or could be made, as the same was situated within the Federal lines, and the act was executed within the military lines of the Confederate States, where the parties were sojourning. 2. That it being admitted that the vendor and vendees had been before, and were at the date of the act, and afterwards, engaged in rebellion against the United States, and so continued until the end of the war, and that the act was passed within the Confederate lines, the property being situated within the Federal lines, the act of transfer was inoperative and void. 3. That such evidence would tend to contradict the decree of condemnation previously entered in the District Court, and set up by the defendant in his answer. 4. That, it being admitted that the grantor and grantees were enemies of the United States at the time the act was passed, the grantor was incompetent to complete the transfer of the property, the same being within Federal military lines. 5. That the copy of the act offered in evidence was not, by the statute of the State, admissible in evidence against any right set up by a third person, without being accompanied with proof that the same had been duly and legally registered in the proper office where the properties were situated. 6. That a state of war then existing, a deed exe-

cuted in the parish of St. Helena, within the Confederate lines, could not be legally recorded in the parish of Orleans, which at that date was within Federal military lines.

These several objections were sustained by the court, and the plaintiff excepted.

The plaintiff requested the court to instruct the jury substantially as follows: —

1st, That even if the Confiscation Act contained a prohibition against sales, transfers, and conveyances, made in good faith prior to its passage, such prohibition did not apply to transfers and conveyances wherein all parties to the same, vendor and vendees, were equally engaged in rebellion against the United States, and, consequently, where the property conveyed or transferred would be as liable to confiscation in the hands of the vendees as in the hands of the vendor.

2d, That all that was seized, and all that could be seized, condemned, and sold under the judgment or decree of the United States District Court for the Eastern District of Louisiana, in the proceedings against the property of Charles M. Conrad, on which judgment or decree, and the sale made in pursuance thereof, the defendant bases his claim to the premises in controversy in this cause, was the title, right, and estate of said Charles M. Conrad, whatever the same might have been, to endure only during his life, in and to the property libelled and condemned, and the right, property, and estate therein of no other person or persons whatsoever.

3d, That the United States, by the proceedings and decree of condemnation, succeeded only to the rights of said Charles M. Conrad to said property, whatever the same might be, to endure only during his life; and that the decree, and marshal's sale to defendant thereunder, had no other effect than to transfer such rights as the United States acquired by the decree, and did not disturb or affect the rights of any other person or persons to the property, or any part thereof; and that if, at the time of the seizure, proceedings, and decree, Charles M. Conrad had no rights and estate in the property involved, the United States acquired no rights and estate therein; and the marshal's sale of the property transferred no interest or estate therein to the defendant, the purchaser at the sale.

But the court refused to give the instructions as prayed, or any of them, and the plaintiff excepted.

At the request of the defendants, the court instructed the jury that, the plaintiff having offered no evidence to show title in himself, it was their duty to return a verdict for the defendants; to which instruction the plaintiff excepted.

The jury found for the defendants; and, judgment having been entered on the verdict, the plaintiff brought the case here on writ of error.

Mr. L. L. Conrad for the plaintiff in error.

Mr. Thomas J. Durant, contra.

MR. JUSTICE FIELD, after stating the case, delivered the opinion of the court.

The questions presented for our determination relate to the admissibility and effect of the act of sale of May 6, 1862, and to the subsequent condemnation and sale in the confiscation proceedings. Numerous exceptions were taken to the rulings of the Circuit Court in admitting and rejecting evidence, and in giving and refusing instructions to the jury; but we do not deem it important to notice them in detail. What we have to say upon the Confiscation Act, the title which passed by a condemnation and sale under it, and the power of enemies to sell and convey to each other their interest in real property situated within the lines of the other belligerent, will sufficiently express our judgment upon the questions involved, and serve to guide the court below in any subsequent proceedings.

The law of July 17, 1862, so far as it related to the confiscation of property, applied only to the property of persons who thereafter might be guilty of acts of disloyalty and treason. It carefully excluded from its application the property of persons who, previous to its passage, may have committed such acts. It left the door open to them to return to their allegiance, without molestation for past offences. The fifth section, with the exception of the third clause, directed the seizure of property only of persons who might *thereafter* hold an office or an agency under the government of the Confederacy, or of one of the States composing it, or might *thereafter* act as an officer in its army or navy, or who, owning property in any loyal State or

Territory, or in the District of Columbia, might *thereafter* give aid and comfort to the rebellion; and the joint resolution of the two houses of Congress, passed in explanation and limitation of the law, removed that exception. That resolution declared that the third clause of that section should be so construed as not to apply to any act or acts done prior to its passage. The sixth section, which provided for the seizure of the property of persons other than those named in the previous section, who, being engaged in armed rebellion, did not, within sixty days after the warning and proclamation of the President, cease to aid, countenance, and abet the rebellion, declared that "all sales, transfers, and conveyances of any such property *after* the expiration of the said sixty days," should be null and void. 12 Stat. 627.

Nothing done, therefore, by the elder Conrad when he made his sale to his sons, which was before the passage of the Confiscation Act, affected his title or power of disposition. It is true, he was then engaged in the rebellion, as a member of the Confederate Congress, and giving constant aid and comfort to the insurrectionary government. But, until some provision was made by law, the courts of the United States could not decree a confiscation of his property, and direct its sale. This follows from the doctrine declared in *Brown* v. *The United States*, reported in the 8th of Cranch. In that case the question arose, whether certain property of the enemy, found on land at the commencement of hostilities with Great Britain in 1812, could be seized and condemned as a consequence of the declaration of war. And it was held that it could not be condemned, without an act of Congress authorizing its seizure and confiscation. The court said that it was conceded that war gives to the sovereign the right to take the persons and confiscate the property of enemies, wherever found; adding, that the mitigation of this rigid rule, which the humane and wise policy of modern times has introduced into practice, cannot impair the right, though it may more or less affect its exercise. "That," said the court, "remains undiminished, and when the sovereign authority shall choose to bring it into operation, the judicial department must give effect to its will. But, until that will shall be expressed, no power of condemnation can exist in the court."

The only acts of Congress providing for the confiscation

of property of persons engaged in the rebellion are those of Aug. 6, 1861, and of July 17, 1862. That of 1861 applied only to property acquired with intent to use or employ the same, or to suffer the same to be used or employed, in aiding or abetting the insurrection, or in resisting the laws, and did not touch the property in controversy here. And the act of 1862, as already stated, did not authorize a seizure and confiscation for past acts. It might have done so, on the simple ground that the owner of the property seized was a public enemy, without reference to the time he became such; but Congress otherwise provided, and its will furnishes the rule by which to determine the rights of the elder Conrad at the time he disposed of his property.

The statute not only did not recognize past acts as grounds for confiscation, but it reached only the estate of the actual owner at the time the property was seized. It might, undoubtedly, have provided for the confiscation of the entire property, from its being within the enemy's country; but the legislature did not so enact. Congress limited the exercise of its power of confiscation to those cases where the owners were officers or agents of the insurrectionary organization, or of one of the States composing it, or commanding in its army or navy; or where, while holding property in a loyal State or Territory, or in the District of Columbia, they gave aid and comfort to the rebellion; or where, not being within these classes, but being in arms in support of the insurrection, they refused, for sixty days after the warning and proclamation of the President, to return to their allegiance. It was the seizure and confiscation of "the estate, property, money, stocks, credits, and effects" of the persons thus specially designated that the act authorized; not the seizure and confiscation of property in enemies' territory, or of enemies generally. It was at the estate and interest which belonged to offending persons of the classes mentioned that the act aimed, nothing more. Proceedings under the act, therefore, affected only their estate and interest in the property seized. It was so held by this court in *Day* v. *Micou*, reported in the 18th of Wallace, where the effect of an adjudication and sale under the act was the direct point in judgment. And this conclusion was not considered as at all affected by the fact, that

after the seizure proceedings *in rem* were to be instituted for the condemnation of the property. The question, said the court, remained, what was the *res* against which the proceedings were directed; and this, it answered, was that which was seized and brought within the jurisdiction of the court. "A condemnation in a proceeding *in rem*," it added, speaking through Mr. Justice Strong, "does not necessarily exclude all claim to other interests than those which were seized. In admiralty cases and in revenue cases a condemnation and sale generally pass the entire title to the property condemned and sold. This is because the thing condemned is considered as the offender or the debtor, and is seized in entirety. But such is not the case in many proceedings which are *in rem*. Decrees of courts of probate or orphans' courts directing sales for the payment of a decedent's debts, or for distribution, are proceedings *in rem*. So are sales under attachments or proceedings to foreclose a mortgage *quasi* proceedings *in rem*, at least. But in none of these cases is any thing more sold than the estate of the decedent, or of the debtor or the mortgagor, in the thing sold. The interests of others are not cut off or affected."

If we apply these views to the case at bar, we must hold that there was nothing in the proceedings and decree under the Confiscation Act against the property of the elder Conrad, upon which the defendant in his answer relies, which could in any respect affect the rights of the younger Conrads to the lands conveyed to them before that act was passed, unless the fact that the parties to the conveyance were, at the time of the sale, engaged in the rebellion against the United States, and were within the enemies' country, rendered it unlawful for the father to transfer and the sons to receive the title to real property situated within the Federal lines. The illegality of the sale on this ground was insisted upon in the court below, and the position was there sustained. But we do not think the position at all tenable. The character of the parties as rebels or enemies did not deprive them of the right to contract with and to sell to each other. As between themselves, all the ordinary business between people of the same community in buying, selling, and exchanging property, movable and immovable, could be lawfully carried on, except in cases where it was expressly forbidden by

the United States, or where it would have been inconsistent with or have tended to weaken their authority. It was commercial intercourse and correspondence between citizens of one belligerent and those of the other, the engaging in traffic between them, which were forbidden by the laws of war and by the President's proclamation of non-intercourse. So long as the war existed, all intercourse between them inconsistent with actual hostilities was unlawful. But commercial intercourse and correspondence of the citizens of the enemy's country among themselves were neither forbidden nor interfered with, so long as they did not impair or tend to impair the supremacy of the national authority or the rights of loyal citizens. No people could long exist without exchanging commodities, and, of course, without buying, selling, and contracting. And no belligerent has ever been so imperious and arbitrary as to attempt to forbid the transaction of ordinary business by its enemies among themselves. No principle of public law and no consideration of public policy could be subserved by any edict to that effect; and its enforcement, if made, would be impossible. If, then, intercourse between the Conrads, father and sons, they being all enemies, was not unlawful; if between them contracts for the purchase and sale of property, in respect to which there was no special interdict, would have been binding, — the sale in the case at bar can only be impeached, if at all, by reason of the situation of the property within the Federal lines. And from that circumstance it could not be impeached, unless the sale, if upheld, in some way frustrated the enforcement of the right of seizure and confiscation possessed by the United States. It may be admitted that the right of a belligerent to confiscate the property of enemies found within its territory cannot be impaired by a sale of the property during the war, but it is not perceived that on any other ground the sale could be invalidated. A conveyance in such case would pass the title subject to be defeated, if the government should afterwards proceed for its condemnation. And to declare this liability was the object of the provision in the Confiscation Act, enacting that "all sales, transfers, and conveyances" of property of certain designated parties made subject to seizure should be null and void. The invalidity there declared was limited

and not absolute. It was only as against the United States that the transfers of property liable to seizure were null and void. They were not void as between private parties, or against any other party than the United States. This was so held in the case of *Corbett* v. *Nutt*, reported in the 10th of Wallace. There a devise (which for the purpose of the case was treated as included within the terms "sales, transfers, and conveyances") of property situated in the District of Columbia, made by a resident enemy in the State of Virginia to a person as trustee, who also resided in that State, and held office under the Confederate government, was held to pass a title good against all the world except the United States. The seizure and confiscation of property of persons engaged in the rebellion, and the appropriation of the proceeds to support the army and navy, were supposed — whether wisely or unwisely is immaterial — to have a tendency to insure the speedy termination of the rebellion; and it was to prevent the provisions enacted to enforce the confiscation from being evaded by the parties whose property was liable to seizure, that sales, transfers, and conveyances of it were declared invalid. As stated by the court, "They were null and void as against the belligerent or sovereign right of the United States to appropriate and use the property for the purpose designated, but in no other respect, and not as against any other party. Neither the object sought nor the language of the act requires any greater extension of the terms used. The United States were the only party who could institute the proceedings for condemnation, the offence for which such condemnation was decreed was against the United States, and the property condemned or its proceeds went to their sole use. They alone could, therefore, be affected by the sale." And the court added, that any other construction would impute to the United States a severity in their legislation entirely foreign to their history. If the sale to the younger Conrads had been made after the passage of the Confiscation Act, it would not have prevented the title of the elder Conrad from vesting by the decree of condemnation in the United States. But, having been made previously, it was not impaired by the act.

An actual delivery of the property to the vendees at the time was not essential to the validity of the sale, it having been

made by public act before a notary. The code of the State declares that an obligation to deliver an object which is particularly specified is perfect by the mere consent of the parties, and renders the creditor the owner; and, further, that this rule "is without any exception, as respects immovables, not only between the parties, but as to all the world, provided the contract be clothed with the formalities required by law, that it is *bona fide*, and purports to transfer the ownership of the property." Art. 1914. The code also declares that "the law considers the tradition or delivery of immovables as always accompanying the public act which transfers the property." Art. 2455; *Lallande* v. *Lee*, 9 Rob. (La.) 514; *Flynn* v. *Moore*, 4 La. Ann. 400; *Ellis* v. *Prevost et al.*, 13 La. 235–237. We are of opinion, therefore, that the act of sale made on the 6th of May, 1862, was unaffected by the subsequent confiscation proceedings, and should have been admitted in evidence.

This case is much stronger than that of *Fairfax's Devisee* v. *Hunter's Lessee*, reported in the 7th of Cranch, which received great consideration by this court. There a devise to an alien enemy resident in England, made during our Revolutionary War by a citizen of Virginia, and there residing at the time, was sustained, and held to vest a title in the devisee which was good until office found. "It is clear by the common law," said Mr. Justice Story, speaking for the court, "that an alien can take lands by purchase though not by descent; or, in other words, he cannot take by the act of law, but he may by the act of the party. This principle has been settled in the Year Books, and has been uniformly recognized as sound law from that time. Nor is there any distinction whether the purchase be by grant or by devise. In either case, the estate vests in the alien, not for his own benefit, but for the benefit of the State; or, in the language of the ancient law, the alien has the capacity to take but not to hold lands, and they may be seized into the hands of the sovereign. But, until the lands are so seized, the alien has complete dominion over the same." And, continues the learned justice, "We do not find that in respect to these general rights and disabilities there is any admitted difference between alien friends and alien enemies. During the war, the property of alien enemies is subject to confiscation *jure belli*, and their civil

capacity to sue is suspended. But as to capacity to purchase, no case has been cited in which it has been denied; and in *The Attorney-General* v. *Wheeden and Shales* (Park. Rep. 267), it was adjudged that a bequest to an alien enemy was good, and after a peace might be enforced. Indeed, the common law in these particulars seems to coincide with the *jus gentium*."

If an alien enemy can, by devise or purchase from a loyal citizen or subject, take an estate in the country of the other belligerent and hold it until office found, there would seem to be no solid reason for refusing a like efficacy to a conveyance from one enemy to another of land similarly situated.[1] A different doctrine would unsettle a multitude of titles passed during the war between residents of the insurrectionary territory temporarily absent therefrom whilst it was dominated by the Federal forces. Such residents were deemed enemies by the mere fact of being inhabitants of that territory, without reference to any hostile disposition manifested or hostile acts committed by them. In numerous instances, also, transfers of property were made in loyal States bordering on the line of actual hostilities, by parties who had left those States and joined the insurgents. This was particularly the case in Missouri and Kentucky. No principle of public policy would be advanced, or principle of public law sustained, by holding such transfers absolutely void, instead of being merely inoperative as against the right of the United States to appropriate the property *jure belli;* on the contrary, such a holding would create unnecessary hardship, and therefore add a new cruelty to the war.

It follows from the views expressed that the judgment of the court below must be reversed and the cause remanded for a new trial; and it is

So ordered.

MR. JUSTICE CLIFFORD dissented. His opinion applies to this and to the subsequent case of *Burbank* v. *Conrad*. It will be found on page 293.

[1] See the able and exhaustive opinion of the Supreme Court of Massachusetts in *Kershaw* v. *Kelsey*, delivered by Mr. Chief Justice Gray, 100 Mass. 561.

BURBANK v. CONRAD.

1. In Louisiana, a conveyance of lands is valid between the parties without registration, and passes the title. The only consequence of a failure of the purchaser to place his conveyance on the records of the parish where the lands are situated is that he is thereby subjected to the risk of losing them if they be again sold or hypothecated by his vendor to an innocent third party, or if they be seized and sold by a creditor of his vendor for the latter's debts.
2. The Registry Act was not intended to protect the United States in the exercise of its power of confiscation from the consequences of previous unrecorded sales by the alleged offender. By the decree, the United States acquires for his life only the estate which at the time of the seizure he actually possessed, not what he may have appeared from the public records to possess, by reason of the omission of his vendees to record the act of sale to them; and only that estate, whatever it may be, for that period passes by the marshal's sale and deed.

ERROR to the Supreme Court of the State of Louisiana.

This was a suit for partition of certain real property in New Orleans, and was brought in a district court of Louisiana. The defendants had judgment, which was affirmed by the Supreme Court of the State, and the plaintiff brought the case here on writ of error. The facts sufficiently appear in the opinion of the court.

Mr. Thomas J. Durant and *Mr. J. Q. A. Fellows* for the plaintiff in error.

Mr. L. L. Conrad, contra.

MR. JUSTICE FIELD delivered the opinion of the court.

This is a suit for a partition of certain real property situated in the city of New Orleans in the State of Louisiana. The plaintiff alleges that he is the owner of an undivided half of the premises; that the defendants are the owners of the other undivided half; and that from the nature of the property it cannot be conveniently divided in kind. He therefore asks a partition by licitation; that is, by a sale of the premises and a division of the proceeds.

The plaintiff asserts title to an undivided half by a deed of the marshal of the United States, executed to him upon a sale under a decree of the District Court, condemning and forfeiting

the property to the United States, in proceedings taken against it as the property of Charles M. Conrad, under the Confiscation Act of July 17, 1862.

The defendants assert title to the whole property by a sale by public act, made to them by their father, the said Charles M. Conrad, before the recorder and *ex-officio* notary-public of the parish of St. Mary, in Louisiana, on the 3d of June, 1862. This parish was then within the Confederate lines; and the Conrads, father and sons, were engaged in the rebellion against the United States. The act of sale was not placed on record in the city of New Orleans until 1870. The good faith of the parties in the transaction is not questioned, nor is the sufficiency of the consideration. But it is contended that the parties, being public enemies in hostile territory, were incompetent at the time to transfer or to accept the title to real property situated within the Federal lines. And if this position should not be sustained, it is further contended that the act of sale not having been recorded in the city of New Orleans until after the condemnation of the property by the District Court and its sale by the marshal, the plaintiff, as purchaser, took the title unaffected by the transaction; in other words, that his position is that of a third party buying upon the faith of the title standing in the name of the elder Conrad upon the public records.

We have recently had occasion, in *Conrad* v. *Waples* (*supra*, p. 279), to consider the first of these questions, and it will be unnecessary here to do more than refer to our opinion in that case. And the second question requires only a brief notice. The object of requiring a public record of instruments affecting the title to real property is to protect third parties dealing with the vendor, by imparting notice to them of any previous sale or hypothecation of the property, and to protect the purchaser against any subsequent attempted disposition of it. In Louisiana, the conveyance is valid between the parties without registration, and passes the title. The only consequence of a failure of the purchaser to place his conveyance on the records of the parish where the property is situated is that he is thereby subjected to the risk of losing the property if it be again sold or hypothecated by his vendor to an innocent third party, or if it be seized and sold by a creditor of his vendor for the latter's

debts. The second purchaser from the vendor and the bidder at the judicial sale would, in that case, hold the property. The United States never stood in the position of a second purchaser of the property sold by the elder Conrad. They were not purchasers at any sale of his property. They had caused his estate in the land, whatever that was, to be seized and condemned. By the decree of condemnation, that estate vested in them for the period of his life. His estate for that period was then their property. The statute declares that the property condemned "shall become the property of the United States, and may be disposed of as the court shall decree." It was the property of the United States, therefore, which was sold and conveyed at the marshal's sale. The United States acquired by the decree, for the life of the offender, only the estate which at the time of the seizure he actually possessed; not what he may have appeared from the public records to possess, by reason of the omission of his vendees to record the act of sale to them: and that estate, whatever it was, for that period passed by the marshal's sale and deed; nothing more and nothing less. The Registry Act was not intended to protect the United States in the exercise of their power of confiscation from the consequences of previous unrecorded sales of the alleged offender. It was in the power of Congress to provide for the confiscation of the entire property, as being within the enemy's country, without limiting it to the estate remaining in the offender; but, not having done so, the court cannot enlarge the operation of the stringent provisions of the statute. The plaintiff had notice of the character and legal effect of the decree of condemnation when he purchased, and is therefore presumed to have known that if the alleged offender possessed no estate in the premises at the time of their seizure, nothing passed to the United States by the decree, or to him by his purchase.

We see no error in the ruling of the Supreme Court of the State of Louisiana, and its judgment is

Affirmed.

MR. JUSTICE CLIFFORD dissenting.

Power was conferred upon the President, and it was made his duty by the fifth section of the act to suppress insurrection,

to cause the seizure of all estate and property of the persons designated in that section, and to apply and use the same and the proceeds thereof for the support of the army. Proceedings *in rem* were authorized for the condemnation of such estates and property, the provision being that the proceedings should conform as nearly as may be to proceedings in admiralty or revenue cases, and that if the property is found to belong to a person engaged in rebellion, or who has given aid and comfort thereto, the same shall be condemned as enemies' property, and shall become the property of the United States. 12 Stat. 589.

Pursuant to that act, an information in proper form was filed against the several properties in controversy in these cases; and the record shows that the same were formally condemned as forfeited to the United States, as appears by the decree of the District Court, fully set forth in the transcript. Due condemnation of the several properties having been adjudged, the writ of *venditioni exponas* was issued; and the same were sold, the defendant in the first suit and the plaintiff in the second being the purchasers of the parcels, the respective titles of which are in controversy in these suits. Formal conveyances were made to the respective purchasers, they respectively being the highest bidders for the several parcels described in their respective deeds of conveyance.

Certain parcels of the property sold as aforesaid are embraced in *Conrad* v. *Waples*, which was commenced in the Circuit Court by the present plaintiff against the purchaser under the marshal's sale, and certain other parcels of the property are embraced in the second suit, which was commenced in the State court by the grantee of those parcels under the marshal's deed, against the defendant in error in that case.

Service was made in that case; and the defendant appeared and set up the seizure of the several parcels as the property of Charles M. Conrad, and the condemnation and sale of the same as previously explained, and the conveyance of the said parcels to him, the defendant, by the marshal as the property of the United States. Interlocutory proceedings of various kinds followed, which it is not important to notice. All such matters having been adjusted, the parties went to trial, and the verdict and judgment were in favor of the defendant. Exceptions were

taken by the plaintiff; and he sued out a writ of error, and removed the cause into this court.

Fee-simple title to the premises is claimed by the plaintiff by virtue of a conveyance from his father, Charles M. Conrad, to himself and his brother, called in the jurisprudence of that State an act of sale, which was executed on the 6th of May, 1862, during the rebellion, before Joseph L. Nettles, recorder in and for the parish of St. Helena, which at the time was within the Confederate lines, the estate and property conveyed being situated in New Orleans, which at the time was in the possession of the army of the United States.

During the trial, the plaintiff offered that act of sale in evidence, in support of his title to the premises in controversy; and the defendant objected to the introduction of the same, upon six grounds: 1. That the act was not a sale, but a mere giving in payment, and that no delivery of the property was or could be made, inasmuch as the same was situated within the Federal lines, and that the act was executed within the military lines of the Confederate States, where the parties thereto were sojourning. 2. That it being admitted that the vendor and vendees had been before and were, at the date of the act and afterwards, engaged in rebellion against the United States, and so continued until the end of the war, and that the act was passed within the Confederate lines, the property being situated within the Federal lines, the act of transfer was inoperative and void. 3. That such evidence would tend to contradict the decree of condemnation previously entered in the District Court, and set up by the defendant in his answer. 4. That it being admitted that the grantor and grantees were enemies of the United States at the time the act was passed, the grantor was incompetent to complete the transfer of the property, the same being within Federal military lines. 5. That the copy of the act offered in evidence was not, by the statute of the State, admissible in evidence against any right set up by a third person, without being accompanied with proof that the same had been duly and legally registered in the proper office where the properties were situated. 6. That a state of war then existing, a deed executed in the parish of St. Helena, within the Confederate lines, could not be legally recorded in

the parish of Orleans, which at that date was within Federal military lines.

These several objections to the evidence offered were sustained by the court, and the plaintiff excepted, which presents the principal question in the case.

Primarily, *Burbank* v. *Conrad* was a petition in the Fifth District Court of the city for partition, the present plaintiff, as petitioner, claiming one undivided half part of the premises under the aforesaid confiscation proceedings and sale. Process was served; and the defendants appeared and pleaded that the sale under those proceedings was void, the supposed owner of the premises having had, at the filing of the information, no right, title, or interest in the property. Instead of that, that they were the true and sole owners of the same, by virtue of a notarial act of sale executed by their father, June 3, 1862, before J. G. Parkinson, recorder of the parish of St. Mary, which presents the same question as that involved in the other case, it appearing that the place where the act of sale was executed was within the Confederate lines.

Hearing was had, and the court rendered judgment in favor of the petitioner. Prompt appeal was taken by the defendants to the Supreme Court of the State, where the parties were again heard, and the Supreme Court reversed the decree of the Fifth District Court, and rendered judgment in favor of the defendants, that they have a valid title to the property described in the petition. Judgment having been entered in favor of the defendants, the plaintiff sued out a writ of error, and removed the cause into this court.

Errors assigned by the plaintiff are, that the Supreme Court of the State erred in reversing the decree of the Fifth District Court, and in entering a decree in favor of the defendants that they had a valid title, and that they be put in possession of the premises.

Sufficient appears to show that the parties in each case claim title to a certain portion of the estate and property condemned as forfeited to the United States under the before-described confiscation proceedings. Two of the claimants, to wit, the defendant in the first suit and the plaintiff in the second, set up title as purchasers under the respective deeds of the

marshal given to them respectively as purchasers at the confiscation sale. On the other hand, the plaintiff in the first suit and the defendants in the second claim title as grantees of their father, the respective conveyances bearing date during the rebellion, but before the passage of the confiscation act under which the several properties were condemned as forfeited to the United States for the treasonable acts of the father.

Conveyances of the kind appear in the record, the one to the plaintiff in the first suit having been executed May 6, 1862, in the parish of St. Helena, before the recorder of that parish, within the Confederate lines, the plaintiff alleging that the same was duly recorded May 31, 1862, and the defendant denying the allegation in his answer; and the other having been executed to the defendants in the second suit, June 3, 1862, in the parish of St. Mary's, before the recorder of that parish, which was also within the Confederate lines; nor was the conveyance ever recorded until the 8th of December, 1870, in the parish of Orleans, where the property is situated.

Argument to show that the proceedings to confiscate the properties in controversy were correct in form is scarcely necessary, as no attempt is made to impeach their formality. Seizure of the properties in controversy was duly made under the act of Congress referred to; and the information charged that the owner of the properties seized, subsequently to the passage of the act, did act as a member of the Confederate Congress, and that he was engaged in armed rebellion against the United States, and that by reason of the premises the properties described in the information, and all the right, title, interest, and estate of the owner, became and were forfeited to the United States, and ought to be condemned to their use.

Due monition issued and was served, which is notice to all the world; and no appearance having been entered, the information or libel was taken as confessed. Proofs were taken which fully established the charges; and the court entered a final decree to that effect, and that the several properties be, and the same are, hereby condemned as forfeited to the United States.

Sales were subsequently made under a *venditioni exponas* issued in due form; and the defendant in the first case and the

plaintiff in the second case became the purchasers of the respective properties in controversy in these two suits.

Beyond all doubt, the title of the defendant in the first and the plaintiff in the second is perfect and must prevail, unless the claim set up by the plaintiff in the first suit and that set up by the defendants in the second can be sustained, both of which depend substantially upon the same state of facts.

Legal seizure of the property condemned was made on the 29th of July, 1863, and the record shows that the information was filed on the 7th of August following. Judgment was rendered Feb. 3, 1865, and the sale followed under the writ of *venditioni exponas* in the regular course of proceedings in such a prosecution.

Jurists of all schools and courts of all nations agree that the title to real estate is governed by the law of the place where it is situated. Differences of opinion upon the subject existed at one time; but the confusion which arose from the application of inconsistent systems of law to such titles ultimately led courts and jurists to narrow the law in all suits concerning immovable property to that of the forum *rei sitæ*. Whart. Confl. Laws, sect. 273; *United States* v. *Crosby*, 7 Cranch, 115.

No estate of freehold in land can be conveyed in Massachusetts, unless it be by a deed or conveyance under the hand and seal of the party; and, to perfect the title as against strangers, it is further requisite that the deed should be acknowledged before a proper magistrate, and be recorded in the registry of deeds for the county where the land lies. *Clark* v. *Graham*, 6 Wheat. 577; *Kerr* v. *Moon*, 9 id. 565.

Authorities to that effect are too numerous for citation; nor is it necessary to extend the list, as the principle is now universally acknowledged. Suffice it to say, in the language of Judge Story, that the title to real property can only be acquired, passed, or lost, according to the *lex rei sitæ;* for which proposition he refers to the expressive language of Sir William Grant, that the validity of every disposition of real estate must depend upon the law of the country in which that real estate is situated. *Curtis* v. *Hutton*, 14 Ves. 541; Story, Confl. Laws (6th ed.), sect. 424.

Courts and jurists everywhere also agree that all trading in

time of war with a public enemy, unless by permission of the sovereign, is interdicted when war is declared or duly recognized by the belligerent parties. *The Hoop*, 1 C. Rob. 196; *Exposito* v. *Bowden*, 7 Ell. & Bl. 779; *Griswold* v. *Waddington*, 15 Johns. (N. Y.) 57; 3 Phill. Int. Law, 108; *White* v. *Burnley*, 20 How. 235.

As soon as war is commenced, all trading, negotiation, communication, or intercourse between the citizens of the belligerent countries must cease, without direct permission of the sovereign power. 1 Chitty, Comm. Law, 379; 1 Duer, Ins. 419; *United States* v. *Grossmayer*, 9 Wall. 72.

Six classes of persons are included in the fifth section of the act, which makes it the duty of the President to cause the seizure of all their estate and property, and to apply and use the same, and the proceeds thereof, for the support of the army.

Due seizure is admitted; but the better opinion is, that it was not intended that the mere act of seizure should vest the property so seized in the United States, as the seventh section provides that, to secure the condemnation and sale of any such property after the same is seized, proceedings *in rem* shall be instituted in the District Court; and that if it shall be found that the property belonged to a person engaged in rebellion, or who had given aid or comfort thereto, the same shall be condemned as enemies' property, and become the property of the United States, and may be disposed of as the court shall decree. *Bigelow* v. *Forrest*, 9 Wall. 350.

Cases arise, undoubtedly, where the property in such a case is divested out of the owner, and vested in the sovereign, immediately on the commission of the offence; as, where the words of the statute are, that if a certain offence be committed the forfeiture shall take place; or that if the described offence is committed the property shall be forfeited. *United States* v. 1960 *Bags of Coffee*, 8 Cranch, 398; *United States* v. *The Brigantine Mars*, 8 id. 416; *The Annandale*, Law Rep. 2 P. & D. 218; *The Reindeer*, 2 Cliff. 68; *Robert* v. *Witherhead*, 12 Mod. 92; *Wilkins* v. *Despard*, 5 T. R. 112; *Certain Logs of Mahogany*, 2 Sumn. 589; *Henderson's Distilled Spirits*, 14 Wall. 44.

Unless the words of the statute are absolute, no such consequences follow until the property is condemned; as, where the

sovereign may by the terms of the same proceed against the property or the person who committed the wrongful act, it is held that the title does not vest in the sovereign until the property is condemned. *United States* v. *Grundy*, 3 Cranch, 338.

Judgment was rendered Feb. 3, 1865, in the confiscation proceedings; and from that time it must be admitted that the title to the several properties was vested in the United States, unless the title set up by the plaintiff in the first case and by the defendants in the second can be sustained.

Sect. 5 of the act of July 13, 1861, provided that the President, whenever the contingencies therein specified should occur in any State or States, or parts thereof, might, by proclamation, declare that the inhabitants of such State, section, or part thereof are in a state of insurrection, and that thereupon all commercial intercourse by and between the same and the citizens thereof, and the citizens of the rest of the United States, shall cease and be unlawful, so long as such condition of hostility shall continue. 12 Stat. 257.

Conformably to that authority, the President, on the 16th of August in the same year, issued his proclamation, in which he declared that the inhabitants of certain States, including the State of Louisiana, were in a state of insurrection against the United States, and that all commercial intercourse between the same and the inhabitants thereof, with certain exceptions not material to be noticed in this investigation, and the citizens of other States and other parts of the United States, is unlawful, and will remain unlawful until such insurrection shall cease or has been suppressed. Id. 1262.

Provision was also made by the fifth section of the said act of Congress that all goods and chattels, wares and merchandise, coming, after such proclamation, from such State or section into the other parts of the United States, and all proceeding to such State or section, by land or water, shall, together with the vessel or vehicle conveying the same, or conveying persons to or from such State or section, be forfeited. *The Reform*, 3 Wall. 617.

Public war, duly declared or recognized as such by the war-making power, imports a prohibition by the sovereign to the

subjects or citizens, of all commercial intercourse and correspondence with citizens or persons domiciled in the enemy country. *Jecker et al.* v. *Montgomery*, 18 How. 110; *The Rapid*, 8 Cranch, 155; *Potts* v. *Bell*, 8 T. R. 548; Maclachlan, Shipp. 473; Wheaton, Int. Law, by Lawrence, 547; *The William Bagaley*, 5 Wall. 377.

Attempt was made, in argument, to distinguish the first case from the second, upon the ground that the supposed notarial act of sale of the 6th of May, under which the plaintiff in the first suit claims title, was, on the 31st of that month, registered in the parish of Orleans, where the land is situated; but it will be seen, by reference to the record, that the act of sale was made subsequent to the secession of the State, and during the period when the parish where the property is situated was temporarily within the Confederate lines.

Enemy parties conveying or accepting conveyances of real properties, under such circumstances, must be understood to do so with the knowledge that the rightful sovereign, if he is successful in regaining the sovereignty of the State or district, may refuse to recognize the validity of such a transfer, in a case where it appears that the grantor, before the act of transfer was executed, had been guilty of treasonable acts against his rightful sovereign, and that both grantor and grantees were at the time engaged in war against the rightful government. *United States* v. *Huckabee*, 16 Wall. 414.

Proof of a decisive character is exhibited in the record, that the rule of the Confederate States over the parish where the property is situated ceased on the 2d of May, 1862, when the national army landed there and took possession of the parish. *The Venice*, 2 Wall. 258; *The Ouachita Cotton*, 6 id. 521.

Military possession by the Confederates followed secession; and the insurgents continued to hold the city from the date of secession to the time when our army landed there, or a few days before, when the mayor of the city declared that the city was undefended, and at the mercy of the victors.

Both the vendor and vendees were engagad in open rebellion against the United States at the time the notarial act of sale was passed within the insurgent lines, the property at the time being situated within the Federal lines: from which it follows

that the vendor was legally incompetent to make sale and delivery of the property to the vendees, and that the vendees were legally incompetent to accept sale and delivery from the rebel vendor. Actual delivery of the property could not lawfully be made, nor could the supposed act of sale be lawfully registered in the parish where the land is situated; the proclamation of the President providing that all commercial intercourse between the insurrectionary State and the inhabitants thereof with the citizens of other States and other parts of the United States is unlawful, and will remain unlawful until such insurrection shall cease, or has been suppressed. 12 Stat. 257, 1262.

Courts of justice, even with the consent of the opposite party, will not enforce a right or contract in violation of a statute, although not expressly declared void by the enactment. Powell, Contr. 166; Comyns, Contr. 59; *Bank* v. *Owens*, 2 Pet. 527; *Coppel* v. *Hall*, 7 Wall. 542.

In war, says Chancellor Kent, every individual of the one nation must acknowledge every individual of the other nation as his own enemy, because the enemy of his country. It reaches to intercourse, transfer or removal of property, to all negotiation and contracts, to all communication, to all locomotive intercourse, to a state of utter occlusion to any intercourse but one of open hostility, and to any meeting but in actual combat. *Griswold* v. *Waddington*, 16 Johns. (N. Y.) 438; *The Rapid*, 8 Cranch, 155.

All intercourse, says Story, between the subjects and citizens of the belligerent countries is illegal, unless sanctioned by the authority of the government, or in the exercise of the rights of humanity. *The Julia*, 8 Cranch, 181.

If a plaintiff cannot open his case without showing that he has broken the law, courts of justice will not assist him to recover, whatever the equities of his case may be. *Fowler* v. *Scully*, 72 Pa. St. 456.

Support to the opposite theory, it is supposed, may be derived from the case of *Kershaw* v. *Kelsey* (100 Mass. 561); but it is difficult to see what foundation there is for the supposition, if the decision is confined, as it should be, to the matters involved in the controversy. Take the facts as reported, and they are

as follows: That the defendant, a citizen of Massachusetts, being in Mississippi in February, 1864, took a lease for one year from the plaintiff, a citizen of Mississippi, of a cotton plantation situated in the latter State, for a rent of $10,000, half in cash and half to be paid out of the cotton crop; the lessor agreeing to deliver, and the lessee to receive and pay for, the value of the corn then on the plantation.

It did not appear whether the defendant went into that State before the war or after it began; nor was there any evidence of any intent on the part of either party to violate or evade the laws, or to oppose or injure the United States. Every presumption of that sort is negatived; but it appeared that the defendant paid the first instalment of rent, took possession of the premises, used the corn there, provided the plantation with supplies to the amount of $5,000, planted and sowed it, and, in the early spring, was driven away by rebel soldiers, and never but once afterwards returned to the plantation.

How long the defendant had resided there prior to the contract of lease did not appear; but the report states that the plaintiff continued to reside on the plantation, raised a crop of cotton there, and delivered it to the son of the defendant, by whom, in the autumn of the same year, it was forwarded to the defendant, who sold it and retained the profits, amounting to nearly $10,000.

Speaking of the facts, the court say, in effect, that the lease was made within the rebel territory, where both parties were at the time, and that it seems to contemplate that the lessee should continue to reside there throughout the term; that the rent was in part paid on the spot, and that the residue was to be paid out of the produce of the land; that the corn the value of which is sought to be recovered in the action was delivered and used on the plantation; that no agreement was made that the cotton crop should be transported, or the rent sent back, across the line between the belligerents; that no contract or communication appears to have been made across that line relating to the lease, to the delivery of possession of the premises, or of the corn, or the payment of the rent of the one or the value of the other.

These limitations, with one other which follows, should be

carefully observed, as they furnish the key to what the court subsequently decided. None of the facts as reported are of a character to require any modification of the laws of war as expounded by the great jurists, to whose decisions reference has already been made; and the court in that case very justly remarked, that the fact that the cotton was subsequently forwarded by the son to the defendant, though it may have been unlawful, cannot affect the validity of the lease, as the lease does not contain any such stipulation.

Based upon the reported case, as thus very clearly explained, the court decided that the facts did not contravene the law of nations or the public acts of the government, even if the plantation was within the enemies' lines, and that the plaintiff upon the case reported is entitled to recover the unpaid rent and the value of the corn. Many other matters are doubtless the subject of remark in the opinion, but the propositions as stated embody every thing which the justices of the court decided in the case.

Their decision is plain, and they make two admissions,—one direct, and the other necessarily implied,—which are equally plain: 1. That the act of forwarding the cotton to the defendant was unlawful. 2. That if the lease had contained any agreement that the cotton crop should be transported or the rent sent back across the line between the belligerents, or if any contract or communication had been made across that line relating to the lease, the delivery of possession of the premises or of the corn, or the payment of the rent of the one or the value of the other, the agreement or contract would have been void, as contravening the law of nations and the public acts of the United States.

Viewed in the light of these suggestions and the authorities referred to, it is clear that the registration of the act of sale of the 6th of May was unlawful, and that the title in the first case cannot be distinguished from the title in the second case, where no registration was made in the parish where the land is situated, until Dec. 8, 1870, nearly six years subsequent to the date of the decree of condemnation. Nor does the registration in the first case give any more effect in law to the title in that case than belongs to the title in the second, as it pur-

ports to have been made May 31, 1862, nearly a month subsequent to the time when the army of the United States landed in the city of New Orleans, and put an end for ever to the temporary and unlawful occupation of that city by the military forces of the Confederate States.

Suppose that such a registry, if it had been made during the Confederate occupation, would have been valid as a transaction between Confederates within the Confederate lines, still it is clear that a notarial act of sale, executed before a Confederate notary within the Confederate lines, could not be lawfully recorded in the parish of New Orleans at any time after the army of the United States landed there and took permanent possession of the parish. Beyond all question, such a registration was unlawful and a nullity, as neither the grantor nor grantees could use the Federal mails to send the document there for registration, nor could they travel there for that purpose in person, or send an agent there to forward the same for registration. *Dean* v. *Nelson*, 10 Wall. 158; *Lasere* v. *Rochereau*, 17 id. 437; *Montgomery* v. *United States*, 15 id. 395.

One of the immediate and important consequences of the declaration of war is the absolute interruption and interdiction of all commercial correspondence, intercourse, and dealing between the subjects of the two countries. 1 Kent, Com. (12th ed.) 66. Nothing is better settled in legal decisions than the doctrine that war puts an end at once to all dealing and all communication of the citizens of one belligerent country with those of the other belligerent country, and that it places every individual of the respective governments, as well as the governments themselves, in a state of hostility. 1 Kent, Com. (12th ed.) 67; *Potts* v. *Bell*, 8 T. R. 548; *Woods* v. *Wilder*, 43 N. Y. 168.

Judicial decisions to that effect are very numerous; and the Supreme Court of Massachusetts admit that the law of nations, as judicially declared, prohibits all intercourse between citizens of the two belligerents inconsistent with the state of war, and that the rule in that regard prohibits every act of voluntary submission to the enemy, and every act or contract which tends to increase his resources, and every kind of trading or commercial intercourse, whether by transmission of money or goods, or

orders for the delivery of either, between the two countries, directly or indirectly, or through the intervention of third persons or partnerships. Lawrence's Wheat. 557.

Neither delivery of the subject-matter nor registry of the act of sale could lawfully be made; and whatever was unlawfully done was a nullity, leaving the title of the property as if the unlawful act had not been done.

Provision is made by law for the appointment of a register of conveyances in that parish, and it is made his duty to register all acts of transfer of immovable property passed in that city and parish, in the order in which the acts shall be delivered to him for that purpose; and it is provided that acts, whether they are passed before a notary-public or otherwise, shall have no effect against third persons but from the day of being registered. Rev. Stat. La. (1870), p. 613, sect. 3159.

Conveyances of the kind must be registered in the public registry of the parish or district where the premises are situated. Sess. Acts La. (1827), p. 136; Rev. Stat. La. (1870), p. 613; *Dooley* v. *Delaney*, 6 La. Ann. 67; Code 1824, arts. 2242, 2250, 2417; Code 1870, arts. 2246 to 2266.

Sales of immovable property made under private signature do not have effect against the creditors of the parties nor against third persons in general only from the day such sale was registered according to law, and the actual delivery of the thing sold took place. Art. 2442.

Registration of such a conveyance in another and different district is not notice to third persons, subsequent purchasers, or attaching creditors. *Pierse* v. *Blunt*, 14 La. Ann. 345; *Carraby* v. *Desmarre*, 7 Mart. N. S. (La.) 661; *Wells* v. *Baldwin*, 5 id. 146; *Smith* v. *His Creditors*, 21 La. Ann. 241. State authorities to that effect are numerous; but, inasmuch as the question is one of decisive importance, it is deemed advisable to refer to all the leading cases. *Lee* v. *Darramon*, 3 Rob. (La.) 161; *Gradenigo* v. *Wallett*, 9 id. 14; *Crear* v. *Sowles*, 2 La. Ann. 598; *Tulane* v. *Levinson*, id. 787; *Tear* v. *Williams*, id. 869; Sess. Laws La. (1855), p. 345.

Third persons, with respect to a contract or judgment, are defined by the Code of 1824 to include all persons who are not parties to a judgment or contract; and the same definition is

given to the same phrase by the Code of 1870, which is more immediately applicable to these cases. Code 1824, art. 3522, n. 32, p. 1110; Code 1870, art. 3556, n. 32, p. 428.

Persons having no pecuniary interest in an appeal, and not aggrieved by the decree, are properly denominated third persons in respect to the appeal. *Morrison* v. *Trudeau*, 1 Mart. N. S. (La.) 384; *Williams* v. *Trepagnier*, 4 id. 342; *Lafitte* v. *Duncan*, id. 622; *Succession of Henderson* v. *Cross*, 2 Rob. (La.) 391.

Those not parties to a written agreement or instrument by which their interest in the thing conveyed is sought to be affected are properly designated as third persons in the jurisprudence of that State. *Brosnaham* v. *Turner*, 16 La. 433; *Wade* v. *Marshall and James*, 5 La. Ann. 157; *Williams* v. *Hagan*, 2 La. 125; Code 1824, art. 3522, n. 32; *McManus* v. *Jewett*, 6 La. 537; *Kittridge* v. *Landry*, 2 Rob. (La.) 72.

When the act of sale of the 6th of May was first offered in evidence, it was not accompanied by the certificate of registry, and was excluded, upon the grounds heretofore sufficiently explained. All that need be added in support of that ruling is to say that it is fully sustained by the statute law of the State, and by many decisions of the highest court of the State, to which reference has already been made. Ruled out, as it was, on that occasion, the plaintiff offered it again, with the certificate of registry annexed; and it was again excluded, upon the further ground that the registration was null and void, and inadmissible in evidence, because the vendees at the time, and before and afterwards, were sojourning in the parish of St. Helena, and were enemies of the United States, and, therefore, that the registration of the act of sale could not legally be made.

Sufficient has already been remarked to show that that ruling is correct, unless it be denied that the statute law of the State, and the repeated decisions of the highest court of the State for nearly seventy years, furnish the rule of decision. Since the 24th of March, 1810, it has been law in that State that "no notarial act concerning immovable property shall have any effect against third persons until the same shall have been recorded in the office of the judge of the parish where

such immovable property is situated." 3 Martin's Digest, 140, sect. 7; Rev. Stat. La. (1856) 453; Rev. Stat. La. (1870) 617.

Any discussion of the facts is unnecessary, as it is conceded that the vendor and the vendees were, at the date of the supposed act of sale, resident within the Confederate lines, and that they were enemies of the United States; that the grantor was a member of the Confederate Congress; and that the grantees were officers in the Confederate army, and were engaged in rebellion against the lawful government, from which it follows that a lawful registry of the property could not be made in the parish where it is situated, without which the express statute law of the State is that the supposed act of sale shall not have any effect against third persons.

Nor is there any difficulty in supporting the decision of the court upon the other ground assumed in the ruling; to wit, that the supposed act was but the giving in payment, as understood in the jurisprudence of that State, which is never effectual to pass the title of property in that State, whether movable or immovable, without delivery. It is of the very essence of the *dation en paiement*, say the Supreme Court of the State, that delivery should actually be made. Neither a sale nor a *dation en paiement* can avail against an attaching creditor when there has been no delivery. *Schultz* v. *Morgan*, 27 La Ann. 616.

Pothier says that a gift in payment is an act by which a debtor gives a thing to his creditor, who is willing to receive it in the place and in payment of a sum of money or of some other thing which is due to him. Pothier, by Cushing, sect. 601, p. 365; 7 Merlin, Répertoire, *verba dation en paiement*, p. 55.

Giving in payment, as defined in the jurisprudence of Louisiana, is an act by which a debtor gives a thing to the creditor who is willing to receive it in payment of a sum which is due; and the decision is that it differs from the ordinary contract of sale in this, that the latter is perfect by the mere consent of the parties, even before the delivery, while the giving in payment is made only by delivery. Code 1824, arts. 2625, 2626. And the Code of 1870 employs the same exact words. Arts. 2655, 2656; *Durnford* v. *Brooks*, 3 Mart. (La.) 222; s. c. id. 269.

Separate examination of the second case in this behalf is quite unnecessary, as it is not pretended that the act of sale from the father to the sons was registered in the parish where the property is situated until nearly six years subsequent to the pretended sale, so that if the universal rule of law is to prevail, that the transfer of immovable property depends upon the law of the place where it is situated, then it is clear that the supposed vendees acquired no title to the premises. *Watkins* v. *Holman*, 16 Pet. 57; *Corbett* v. *Nutt*, 10 Wall. 464; *McGoon* v. *Scales*, 9 id. 23; Lawrence's Wheat. 164, 165.

Wheaton says that the law of the place where real property is situated governs exclusively as to the tenure, the title, and the descent of real property, and the notes of the editor fully confirm the proposition.

War, in our jurisprudence, is not an absolute confiscation of the property of the enemy, but simply confers the right of confiscation. Hence it was early determined that British property found in the United States, on land, at the commencement of hostilities with Great Britain, could not be condemned as enemy property, without a legislative act authorizing its confiscation. *Brown* v. *United States*, 8 Cranch, 110; Lawrence's Wheat. 530.

Discussion of that subject, however, is wholly unnecessary, as the property in question in the cases before the court was confiscated under an act of Congress, which, it is admitted, gave unquestioned jurisdiction to the District Court which entered the decree of condemnation.

From the passage of the act of Congress, it became the duty of the President to cause the seizure to be made; and it is not questioned that the power conferred was properly exercised, nor is it denied in argument that all the proceedings were correct, the only defence in the one case and ground of claim in the other being that the person named in the information as the guilty party was not the lawful owner of the property at the time of the seizure. Most of the grounds of that claim and defence have already been sufficiently examined, and, it is believed, have been fully refuted. Only one more remains for examination, and that is, that the United States are not a third party, within the meaning of the State law, and therefore that

an act of sale never registered in the parish where the property is situated is sufficient to defeat the title of a purchaser derived under the confiscation proceedings and the decree of condemnation.

Such a theory finds no support in the words of the act of Congress, nor is there any authority to sustain it other than what is found in the opinion of the State court in the case now here for re-examination. *Burbank* v. *C. A. & L. L. Conrad*, 27 La. Ann. 152. Cases of the kind are never regarded as authority, for the reason that they are, by the express words of the act of Congress providing for their review, subject to be modified or reversed; nor can it be admitted that there is any foundation for such a rule, as it would render the Confiscation Act a public snare and a delusion.

Subsequent purchasers and attaching creditors, it is admitted, would find protection in such a case; but the argument is, that enemies of the United States engaged in war against the lawful government, and resident in the enemy territory, may defeat the right of the government to punish treason by secret transfers of enemy property situated within the lines of the Federal army, without its being possible for the officers of the United States to ascertain to whom any such transfer was made.

Unlawful registration is no better than none at all, for the reason that, being void, it does not operate as notice to any third party, and, if so, then it follows that neither the United States nor the grantees of the United States had any knowledge that the title of the guilty party had been previously transferred under the laws of the rebel States. Fraud is not imputed to the United States, and it is as certain as truth that the purchasers of the properties were as innocent of fraud as their grantors.

Congress intended by the Confiscation Act, when it was duly executed, to deprive the guilty owner of the means by which he could aid the enemy, and it left in him no estate which he could convey for that or any other purpose. *Wallach et al.* v. *Van Riswick*, 92 U. S. 202.

Where a party, domiciled at the beginning of the war in New Orleans, subsequently went within the rebel lines, and there engaged actively in business, and while so engaged purchased

cotton which, when our army at a later period reoccupied the city, was seized and sold, and the proceeds paid into the treasury, it was held, by the unanimous decision of this court, that the purchase of the cotton was illegal and void, and that it gave the purchaser no title whatever. *Mitchel* v. *United States*, 21 Wall. 350; *Desmare* v. *United States*, 93 U. S. 605. Whatever interest he had in the property had been seized as forfeited to the United States, and placed, pending the suit, beyond his reach or that of his creditor. All subsequently acquired rights were subject to the prior claim of the United States, if perfected by a decree of condemnation. *Pike* v. *Wassell*, 94 id. 711.

Human ingenuity, however great, cannot distinguish the principle ruled in those cases from the case before the court; and still it is insisted in argument that the grantees in the deed from the guilty owner acquired a good title against the United States, without delivery of the property and without legal registration in the parish where the property is situated. Immovable property, says Woolsey, in his treatise on International Law, follows the *lex rei sitæ*, or place where it lies; and he adopts the rule promulgated by foreign writers, that he who wishes to gain, have, or exercise a right to such property betakes himself for that purpose to its place, and subjects himself voluntarily to the local law which rules where the property is situated. Woolsey, Int. Law, § 71.

Foreign codes, jurists, and the decided cases, says Westlake, agree with the common law in maintaining the exclusive claims of the *situs* to the jurisdiction concerning immovables. Differences of opinion, it is said by Burge, exist among jurists as to the rule of decision where the contract affects the person as well as things; but he says there is no difference among them in adopting the *lex loci rei sitæ* in all questions regarding the modification or creation of estates or interests in immovable property. 2 Burge, Com. on Col. & For. Laws, c. 9, p. 841.

Obligations to convey, if they be perfected *secundum legem domicilii*, may be binding; but the conveyances themselves of immovable property will not be effectual, unless executed according to the requirements of the local law. In the conveyance of immovable property, or of any right affecting the same, the

grantor must follow the solemnities of the law of the place in which the property lies, and from which it is impossible to remove it; for, though he be subject with respect to his person to the *lex domicilii*, that law can have no authority over property which has its fixed seat in another political jurisdiction, and which cannot be tried but before the courts and according to the laws where it is situated.

Two fatal defects, therefore, exist in the supposed title of the sons to the properties in controversy, as shown by the most conclusive evidence: 1. That the subject-matter of the respective sales was never delivered to the supposed grantees, as required by the *lex loci rei sitæ*. 2. That neither of the supposed acts of sale was ever lawfully registered in the parish where the property is situated, from which it follows, in case either of the alleged defects is shown, that the decree of condemnation vested the title to the same in the United States.

Apply those rules to the case before the court, and it is clear that the judgment in the first case should be affirmed, and that the judgment in the second case should be reversed.

SAN ANTONIO v. MEHAFFY.

1. The twelfth section of the act of the legislature of Texas, entitled "An Act to incorporate the San Antonio Railroad Company," which authorizes the city of San Antonio to subscribe for the stock of said company, and issue bonds to pay for the same, is not repugnant to the provision of the State Constitution of 1845, requiring that "every law enacted by the legislature shall contain but one object, and that shall be expressed in the title."
2. Certain bonds or securities issued by the city of San Antonio, March 1, 1852, recite that "this debt is authorized by a vote of the electors of the city of San Antonio, taken in accordance with the provisions of an act to incorporate the San Antonio and Mexican Gulf Railroad Company, approved Sept. 5, 1850," &c. *Held*, that the city is estopped from denying the verity of the recital, and that the bonds or securities are valid in the hands of a *bona fide* purchaser for value before maturity.
3. The fact that the principal securities delivered to that company were not sealed is immaterial, because the act under which they were issued expressly authorized those charged with the duty of making the subscription to "issue bonds bearing interest, or otherwise pledge the faith of the city."

ERROR to the Circuit Court of the United States for the Western District of Texas.

The facts are stated in the opinion of the court.

Mr. Thomas J. Durant for the plaintiff in error.

Mr. T. A. Lambert, contra.

MR. JUSTICE SWAYNE delivered the opinion of the court.

The cause of action in this case is certain "bonds," as they are termed, and coupons, issued by the city of San Antonio in payment for stock of the San Antonio and Mexican Gulf Railroad Company, subscribed for by the city.

The action is one of a class that has been very numerous in this court for several years past. Almost every question that can arise in such litigation has been settled in this forum by repeated adjudications. In the present case, our remarks will be confined to the points to which our attention has been called by the counsel for the city. No fulness of discussion is necessary.

The twelfth section of the act approved Sept. 5, 1850, entitled "An Act to incorporate the San Antonio Railroad Company," authorized the city to take the stock "and issue bonds bearing interest, or otherwise to pledge the faith of said city, . . . to pay for the same."

It was made a condition of the subscription that two-thirds of the qualified electors of the city should vote in favor of it.

The eighteenth section of the act declared that if the work was not commenced within one year from the 1st of November, 1850, and if at least twenty miles of the road were not in running order within three years from its commencement, the charter should be void. An act, approved Feb. 14, 1852, extended the time for commencing the work to two years from the date of the act, and required ten miles to be finished within three years. Subsequent acts bearing upon this subject were passed, but it is not deemed necessary particularly to advert to them.

An election was held pursuant to the first-named act. All the votes cast but three were in favor of the subscription. It was thereupon made, and the securities were delivered to the company in payment. Each of the bonds, so called, had on its

face the following recital: "This debt is authorized by a vote of the electors of the city of San Antonio, taken in accordance with the provisions of an act to incorporate the San Antonio and Mexican Gulf Railroad Company, approved Sept. 5, 1850. Entered and recorded in the office of the city treasurer, and is transferable on delivery. City Hall, City of Antonio, March 1, 1852." The road was not built, and the enterprise has been abandoned.

The grant of the power given to the city was consistent with the Constitution of the State. *San Antonio* v. *Gould*, 34 Tex. 49; *Same* v. *Jones*, 28 id. 19.

The holder of commercial paper, in the absence of proof to the contrary, is presumed to have taken it underdue for a valuable consideration, and without notice of any objection to which it was liable. 2 Pars. Bills and Notes, 9; *Pinkerton* v. *Bailey*, 8 Wend. (N. Y.) 600.

There is certainly nothing in the record which shows that such is not the position of the defendant in error.

This shuts the door, as matter of law, to all inquiry touching the regularity of the proceedings of the officers charged with the duty of subscribing and making payment in the way prescribed. The rule in such cases is, that if the municipality could have had power under any circumstances to issue the securities, the *bona fide* holder has a right to presume they were issued under the circumstances which give the authority, and they are no more liable to be impeached in his hands for any infirmity than any other commercial paper. *Supervisors* v. *Schenck*, 5 Wall. 772; *San Antonio* v. *Lane*, 32 Tex. 405.

We have, however, looked carefully into the record for light as to the facts, and find that all the proceedings were in substantial conformity to the requirements of the law, and the proof is clear that every thing was honestly done.

The city is estopped by the recital on the face of the securities to deny its verity. A *bona fide* purchaser had a right to regard it as true, and was not bound to look further. *Commissioners, &c.* v. *Aspinwall*, 21 How. 539; *Mercer County* v. *Hackett*, 1 Wall. 83; *Grand Chute* v. *Winegar*, 15 id. 355; *San Antonio* v. *Gould*, *supra*.

The principal securities delivered to the company were not bonds, because they were unsealed; but this is immaterial. The twelfth section, under which they were issued, expressly declared that those charged with the duty of subscribing "may issue bonds bearing interest, or otherwise pledge the faith of the city."

The securities issued were within the latter category. If that clause were wanting, we should have no difficulty in holding that the city was, under the circumstances, estopped from denying their validity. The doctrine of *ultra vires*, whether invoked for or against a corporation, is not favored in the law. It should never be applied where it will defeat the ends of justice, if such a result can be avoided. *Whitney Arms Co.* v. *Barlow et al.*, 63 N. Y. 62.

The Constitution of Texas of 1845 provided that "every law enacted by the legislature shall contain but one object, and that shall be expressed in the title."

It is insisted that the twelfth section of the act of 1850 is in conflict with this requirement, and is, therefore, void. This identical question arose in *San Antonio* v. *Lane*, *supra*. It was there unanimously held by the court that "when an act of the legislature expresses in its title the object of the act, the title embraces and expresses any lawful means to achieve the object, thus fulfilling the constitutional injunction that every law shall embrace but one object, and that shall be expressed in its title." The objection was overruled.

In the *City of San Antonio* v. *Gould* (*supra*), and in *Gittings* v. *San Antonio* (47 id. 548), the same court, consisting of judges other than those who sat in the first case, came to a different conclusion. The question may, therefore, be fairly considered as still unsettled in the jurisprudence of the State. Under these circumstances, this court has always felt at liberty to follow the guidance of its own judgment.

We think the ruling in the case first mentioned has on its side the greater weight of reason and authority. We, therefore, hold the section not to be obnoxious to the requirement of the Constitution, and that it is, therefore, valid.

The refusal of the court below to grant a new trial involved

only the exercise of its discretion, and cannot be made the subject of review by this court.

Judgment affirmed.

NOTE. — In *San Antonio* v. *Barnes* error to the Circuit Court of the United States for the Western District of Texas, which was argued by *Mr. Thomas J. Durant* for the plaintiff in error, and by *Mr. Robert Sewell* for the defendant in error, MR. JUSTICE SWAYNE, in delivering the opinion of the court, remarked: This case is in all respects substantially the same with that of *San Antonio* v. *Mehaffy*, just decided. The opinion in that case is decisive of this.

Judgment affirmed.

McGARRAHAN v. MINING COMPANY.

1. The statutory provisions prescribing the manner in which a patent of the United States for land shall be executed are mandatory. No equivalent for any of the required formalities is allowed, but each of the integral acts to be performed is essential to the perfection and validity of such an instrument. If, therefore, it is not actually countersigned by the recorder of the General Land-Office in person, or, in his absence, by the principal clerk of private land claims as acting recorder, it is not executed according to law, and does not pass the title of the United States.
2. The record in the volume kept for that purpose at the General Land-Office at Washington, of a patent which has been executed in the manner which the law directs, is evidence of the same dignity and is subject to the same defences as the patent itself. If the instrument, as the same appears of record, was not so executed, and was therefore insufficient on its face to transfer the title of the United States, the record raises no presumption that a patent duly executed was delivered to and accepted by the grantee.
3. The act of March 3, 1843 (5 Stat. 627), in relation to exemplifications of records, does not dispense with the provisions of law touching the signing and countersigning. The record, to prove a valid patent, must still show that they were complied with. The names need not be fully inserted in the record, but it must appear in some form that they were actually signed to the patent when it was issued.
4. The failure to record a patent does not defeat the grant.

ERROR to the Supreme Court of the State of California.

This was ejectment by William McGarrahan in the District Court of the Twentieth Judicial District of California in and for Santa Clara County, against the New Idria Mining Company, to recover possession of certain lands in that State known as the Rancho Panoche Grande. He claimed them under a patent therefor which he alleged had been issued by the United States to Vicente P. Gomez, his grantor, under the act of Congress to

ascertain and settle the private land claims in the State of California, approved March 3, 1851. 9 Stat. 631. The patent was not produced upon the trial; but the plaintiff put in evidence a certified copy of an instrument, as the same was recorded in a volume kept at the General Land-Office at Washington for the recording of patents of the United States for confirmed Mexican land grants in California, being volume 4 of such records, upon pages 312–321 inclusive. The concluding portion of that copy is as follows: —

"In testimony whereof, I, Abraham Lincoln, President of the United States, have caused these letters to be made patent, and the seal of the General Land-Office to be hereunto affixed.

"Given under my hand at the city of Washington, this fourteenth day of March, in the year of our Lord one thousand eight hundred and sixty-three, and of the independence of the United States the eighty-seventh.

[L. S.] "By the President: ABRAHAM LINCOLN.
By W. O. STODDARD,
"*Secretary.*
"*Acting Recorder of the General Land-Office.*"

As the only question decided by this court is, whether the exemplification admitted on the trial of the cause shows upon its face the execution of a patent sufficient in law to pass the title of the United States, no reference is made to the other points which arose in the court below and were elaborately discussed by counsel here.

The District Court rendered judgment for the defendant, which was affirmed by the Supreme Court. McGarrahan then sued out this writ of error.

Mr. Montgomery Blair, *Mr. Matt. H. Carpenter*, and *Mr. Charles P. Shaw*, for the plaintiff in error.

The recording of a document which the law authorizes to be recorded is evidence of the pre-existence of all that is necessary to authorize the recording. *Farrar* v. *Fessenden*, 39 N. H. 268; *McCauley et al.* v. *State*, 21 Md. 556; *Warner* v. *Hardy*, 6 id. 525; *Barton* v. *Murrain*, 27 Mo. 235; *Patterson* v. *Winn*, 5 Pet. 239.

The requirement that patents for lands shall be countersigned by the recorder of the General Land-Office is merely directory,

and the countersigning of such an instrument is not essential to its validity. Sedgwick, Stat. and Const. Law, 368–374; *Rex* v. *Inhabitants of Birmingham*, 9 Barn. & Cress. 925; *Cole* v. *Green*, 6 Man. & G. 872; *Gale* v. *Mead*, 2 Den. (N. Y.) 160; *Marchant* v. *Langworthy*, 3 id. 526; *People* v. *Livingston*, 8 Barb. (N. Y.) 253; *Juliand* v. *Rathbone*, 39 id. 101; *Ayres* v. *Stewart*, 1 Overt. (Tenn.) 221; *Hickman* v. *Boffman*, Hard. (Ky.) 348; *Spencer* v. *Lapsley*, 20 How. 264; *United States* v. *Sutler*, 21 id. 170; *Williams* v. *Sheldon*, 10 Wend. (N. Y.) 654; *Hedden* v. *Overton*, 4 Bibb (Ky.), 406; *Exum* v. *Brister*, 35 Miss. 391; *Blount* v. *Benbury*, 2 Hayw. (N. C.) 542; *Philips* v. *Erwin*, 1 Overt. (Tenn.) 235; *Reid's Lessee* v. *Dodson*, id. 313; *Lessee of Stephens* v. *Bear*, 3 Binn. (Pa.) 31; *Lessees of Welter* v. *Beecher*, 3 Wash. 375.

If the name of the recorder be omitted in the record, the first section of the act of March 3, 1843 (5 Stat. 627), cures the defect, by making the mere record of the patent conclusive of its due execution, and copies of such record of the same validity in "evidence as if the names of the officers signing and countersigning the same had been fully inserted in said record."

Mr. Jeremiah S. Black, contra.

Patents for private land claims are not valid unless countersigned and sealed by the recorder of the General Land-Office. 2 Stat. 716, sect. 8; 5 id. 111, sect. 6; id. 416, sects. 1, 2; *United States* v. *The Commissioner*, 5 Wall. 563; *The Secretary* v. *McGarrahan*, 9 id. 248; 3 Op. Att'y-Gen. 140, 167, 630.

MR. CHIEF JUSTICE WAITE delivered the opinion of the court.

The Federal question in this case is, whether the record in the volume kept at the General Land-Office at Washington for the recording of patents of the United States issued upon California confirmed Mexican grants, relied upon by McGarrahan as evidence of his title, proves a conveyance by the United States of the land in controversy to Vicente P. Gomez, his grantor. In his behalf, it is contended that the record is itself the grant; or, if not, that it proves the issue to Gomez of a patent which does grant the legal title to the property described.

That the record is not itself the grant of title is evident. The thirteenth section of the act "to ascertain and settle the private land claims in the State of California" (9 Stat. 631) provides, that, "for all claims finally confirmed, . . . a patent shall issue to the claimant upon his presenting to the General Land-Office an authentic copy of such confirmation and a plat of the survey," &c. By sect. 8 of the "act for the establishment of a general land-office in the Department of the Treasury" (2 id. 717), it is enacted, that "all patents issuing from the said office shall be issued in the name of the United States and under the seal of said office, and be signed by the President of the United States, and countersigned by the commissioner of said office, and shall be recorded in said office in books to be kept for the purpose." Thus the patent executed in the prescribed form which issues from the General Land-Office is made the instrument of passing title out of the United States. The record of this patent is evidence of the grant, but not the grant itself. It is evidence of equal dignity with the patent, because, like the patent, it shows that a patent containing the grant has been issued.

The record called for by the act of Congress is made by copying the patent to be issued into the book kept for that purpose. The effect of the record, therefore, is to show that an instrument such as is there copied has actually been prepared for issue from the General Land-Office. If the instrument as recorded is sufficient on its face to pass the title, it is to be presumed that the grant has actually been made; but if it is not sufficient, no such presumption arises. In short, the record, for the purposes of evidence, stands in the same position and has the same effect as the instrument of which it purports to be a copy. The same defences can be made against the record as could be made against the instrument recorded. The public records of the executive departments of the government are not, like those kept pursuant to ordinary registration laws, intended for notice, but for preservation of the evidence of the transactions of the department.

This brings us to inquire whether this record shows upon its face the execution of a patent sufficient in law to transfer the title of the premises in controversy from the United States.

And here it may not be improper to note, that although the case shows that in July, 1870, before this suit was commenced, the commissioner of the General Land-Office and the recorder caused to be entered upon the face of the record, over their official signatures, a statement to the effect that the instrument in question was never in fact executed or delivered, McGarrahan rests his whole case upon the record and the evidence it furnishes. This he has the undoubted right to do; but, if he does, he must stand or fall by what it proves. It is his own fault, if, having a valid patent in his possession, he fails to produce it.

By the first section of the "Act to reorganize the General Land-Office" (5 Stat. 107), it was provided that the executive duties relating "to private claims of land, and the issuing of patents for all grants of land under the authority of the government of the United States, shall be subject to the supervision and control of the commissioner of the General Land-Office, under the direction of the President of the United States;" and by the fourth section, "that there shall be appointed by the President, by and with the consent of the Senate, a recorder of the General Land-Office, whose duty it shall be, in pursuance of instructions from the commissioner, to certify and affix the seal of the General Land-Office to all patents for public lands, and he shall attend to the correct engrossing and recording and transmission of such patents. He shall prepare alphabetical indexes of the names of patentees, and of persons entitled to patents. . . ." By the sixth section, it was further provided that "it shall be lawful for the President of the United States, by and with the advice and consent of the Senate, to appoint a secretary, . . . whose duty it shall be, under the direction of the President, to sign, in his name and for him, all patents for lands sold or granted under the authority of the United States." By the second section of the act of March 3, 1841 (id. 416), the duty of countersigning patents was transferred from the commissioner of the General Land-Office to the recorder. Thus it appears that a patent for lands must be signed in the name of the President, either by himself or by his duly appointed secretary, sealed with the seal of the General Land-Office, and countersigned by the recorder. Until all these things have been done, the United States has not

executed a patent for a grant of lands. Each and every one of the integral parts of the execution is essential to the perfection of the patent. They are of equal importance under the law, and one cannot be dispensed with more than another. Neither is directory, but all are mandatory. The question is not what, in the absence of statutory regulations, would constitute a valid grant, but what the statute requires. Not what other statutes may prescribe, but what this does. Neither the signing nor the sealing nor the countersigning can be omitted, any more than the signing or the sealing or the acknowledgment by a grantor, or the attestation by witnesses, when by statute such forms are prescribed for the due execution of deeds by private parties for the conveyance of lands. It has never been doubted that in such cases the omission of any of the statutory requirements invalidates the deed. The legal title to lands cannot be conveyed except in the form provided by law.

But if either of the requisites to the due execution of a patent may be considered as directory, the countersigning by the recorder should not be permitted to occupy that position. The President may sign by his secretary, but the recorder must sign himself. He countersigns, that is to say, signs opposite to and after the President, by way of authentication. Being specially charged with the duty of attending to the issue of patents, it is peculiarly appropriate that his attestation should be the last act to be performed in the perfection of the instrument, and that he should do it personally.

The record in this case shows an instrument in the form of a patent, signed in the name of the President, and sealed. The place for the signature of the acting recorder is left blank. The name of the President is signed by his secretary. The claim which is made, that Stoddard, the secretary, also countersigned as acting recorder, is not sustained by the evidence. His signature appears only as secretary, and there is nothing whatever to indicate that he attempted to act as recorder. Besides, the law provides (5 Stat. 111, sect. 8), "that whenever the office of recorder shall become vacant, or in case of the sickness or absence of the recorder, the duties of his office shall be performed *ad interim* by the principal clerk on private land claims." It certainly is not to be presumed that the same person will hold

at the same time the offices of secretary to the President for signing patents, and of principal clerk on private land claims And if it were, his signature as secretary will not be treated as his signature as recorder *ad interim* or acting recorder. He must sign both as secretary and as recorder.

The case is, therefore, one in which the record shows upon its face an instrument prepared for a patent but not countersigned by the recorder. If a patent thus defectively executed had itself been introduced in evidence, it would not have shown a grant actually perfected. But it is said that the record of the paper is evidence of the fact that the recorder recognized its completeness, and is equivalent to its countersignature. The law is not satisfied with the simple recognition of the validity of a patent by an officer of the government. To be valid, a patent must be actually executed. Before it can operate as a grant, the last formalities of the law prescribed for its execution must be complied with. No provision is made for an equivalent of these formalities. Even an actual delivery of the patent by the recorder in person would not supply the place of his countersignature, any more than the delivery of a paper by a private person without being signed would make it his deed. But the record of a patent would not be necessarily as much a recognition of its validity as a personal delivery by the recorder, because he only attends to the recording, and is not required to do it in person. The only way in which he can lawfully and effectually recognize the validity of a patent is by personally countersigning it.

Again, it is said that the act of March 3, 1843 (5 Stat. 627), remedies the defect, because it provides "that literal exemplifications of any such records which may have been or may be granted in virtue of the provisions of the seventh section of the act, . . . entitled 'An Act to reorganize the General Land-Office,' shall be deemed and held to be of the same validity in all proceedings, whether at law or in equity, wherein such exemplifications are adduced in evidence, as if the names of the officers signing and countersigning the same had been fully inserted in such record." This act does not, however, dispense with the signing and countersigning. The record, to prove a valid patent, must still show that these provisions of the law were complied with. The

names need not be fully inserted in the record, but it must appear in some form that the names were actually signed to the patent when it issued. If they are partially inserted in the record, it will be presumed that they fully appeared in the patent; but no such presumption will be raised if no signature is shown by the record. Here no signature does appear, and consequently none will be presumed.

The failure to record the patent does not defeat the grant. It only takes from the party one of the means of making his proof. If he can produce the patent itself, and that is executed with all the formalities required by the law, he can still maintain his rights under it. He is not, therefore, necessarily deprived of his title because of a defective record. He is in no worse condition with the signatures omitted than he would have been if the description of his land had been erroneously copied, or other mistakes had been made which rendered the record useless for the purposes of evidence. A perfect record of a perfect patent proves the grant; but a perfect record of an imperfect patent, or an imperfect record of a perfect patent, has no such effect. In such a case, if a perfect patent has in fact issued, it must be proved in some other way than by the record. It is undoubtedly true, that, when a right to a patent is complete and the last formalities of the law in respect to its execution and issue have been complied with by the officers of the government charged with that duty, the record will be treated as presumptive evidence of its delivery to and acceptance by the grantee. But until the patent is complete, it cannot properly be recorded, and consequently an incomplete record raises no such presumption.

Again, it is said that the record of an instrument which the law requires to be recorded is *prima facie* evidence of the validity of the instrument. That is undoubtedly true, if the instrument recorded is apparently valid. The presumption arising from the record is, that whatever appears to have been done, actually was done. If the record shows a perfect instrument, the presumption is in favor of its validity; but if it shows an imperfect instrument, a corresponding presumption follows. Here the instrument recorded appears to have been incomplete, and consequently it must be presumed to be invalid. This pre-

sumption will continue until overcome by proof that the instrument as executed and delivered was valid.

We are of the opinion that, because this record does not show a patent countersigned by the recorder, it is not sufficient to prove title in the party under whom McGarrahan claims. This makes it unnecessary to consider any of the other questions which have been argued; and the judgment is

Affirmed.

MR. JUSTICE FIELD and MR. JUSTICE HARLAN took no part in the decision of this cause.

AMES v. QUIMBY.

A contract for furnishing goods at a certain price, based on the then value of gold, stipulated that such price should be increased or reduced with the rise or the fall in that value, with a proviso, however, that a rise or a fall of twenty-five per cent, unless it remained sufficiently long to affect the general price of merchandise, should not change the contract price of the goods. When they were delivered, gold had undergone a reduction of more than twenty-five per cent below its value at the date of the contract. *Held*, that in a suit on the contract the purchaser was entitled to a corresponding reduction in the contract price of the goods, without showing that the decline in gold had affected the general price of merchandise.

ERROR to the Circuit Court of the United States for the Western District of Michigan.

Quimby brought an action against Ames & Sons, upon the following contract, viz.: —

"N. EASTON, Jan. 2, 1865.

"Mr. Ichabod L. Quimby agrees to furnish us, and we to take from him, fifteen thousand dozen long shovel-handles, to be of the best quality of timber and workmanship, for the present year, the price to be ($1.25) one dollar and twenty-five cents per dozen, basing the price on the present price of gold, $2.25.

"If the price of gold goes up or down, then the price of handles shall be advanced or reduced accordingly. But it is understood that no advance or reduction of the price of gold of twenty-five per cent shall change the price of handles, unless it shall remain at the advanced or reduced rate sufficiently long to affect the general price of merchandise.

"I. L. QUIMBY.
"OLIVER AMES & SONS."

Quimby, in the months of May and July, 1865, furnished the full complement of shovel-handles, and four hundred and forty-eight dozen in excess of the requirements of the contract. There were delivered nine thousand eight hundred and twelve dozen, May 20, 22, and 23, when gold was worth $1.31; one thousand one hundred and eighty-eight dozen, May 25, when gold was worth $1.36; and four thousand four hundred and forty-eight dozen, July 29, when gold was worth $1.45.

The price of gold having been reduced more than twenty-five per cent below $2.25, Ames & Sons claimed a corresponding reduction in their price of the handles; which would bring those delivered from May 20 to 23, inclusive, down to seventy-two and a half cents; those delivered May 25, down to seventy-five and a half cents; and those delivered July 29, down to eighty and a half cents, per dozen: but the court held that, to entitle them to any reduction, there must be proof that the decline in gold had at those dates affected the general price of merchandise; and, there being no such proof, judgment was given accordingly. Ames & Sons thereupon sued out this writ of error.

Mr. J. Smiley for the plaintiffs in error.

Mr. L. D. Norris, *contra*.

MR. JUSTICE HUNT delivered the opinion of the court.

The contract of the parties is, in several particulars, susceptible of different constructions. Thus, the price of the articles to be delivered is fixed at $1.25 per dozen, to be regulated, however, by the price of gold. "If the price of gold goes up or down, the price of the handles shall be advanced or reduced accordingly." If gold goes up in price, does the price of the goods go up, or do they go down? Gold is here made the standard of value, although it was not, at the time this contract was made, the ordinary medium of circulation in this country.

Instead of saying that gold, the standard, goes up or down, it would be more accurate to say that the depreciation of the paper in circulation is greater or less.

The court below held that if gold should go up in price, the price of the goods should be increased; if it should go down in

price, that of the goods should be diminished. In this we agree; and, as the important question does not here arise, we dismiss this branch of the case.

The contract has this further provision: "No advance or reduction of the price of gold of twenty-five per cent shall change the price of handles, unless it shall remain at the advanced or reduced rate sufficiently long to affect the general price of merchandise."

The price of gold having fallen, between the date of the contract and the delivery of the goods, more than twenty-five per cent, did that fact of itself entitle the defendants to a corresponding reduction in the price of the goods; or were the defendants also bound to show that the general price of merchandise had been thereby affected? In other words, was the qualification that the changed rate should continue so long as to affect the price of general merchandise applicable where the advance or reduction in the price of gold had been twenty-five per cent only, or where it was twenty-five per cent or more?

The court below held that it was applicable to the present case, where the change in the price of gold had greatly exceeded twenty-five per cent.

In considering this contract, we are to place ourselves, as far as may be, in the position of the parties, with the knowledge possessed by them of former and present affairs. They were practical business men. They had seen, during the previous four years, an enormous advance — extravagant and fictitious — in the price of every thing, and understood it to be dependent upon the character of the currency.

They intended to provide for the effect of an appreciation or depreciation of the currency in circulation, called the price of gold; and we think their evident knowledge of the principles governing the subject bears strongly upon the precise point decided by the court below.

While it cannot be denied that the language of the contract will bear the construction put upon it by the court below, we are all of the opinion that such construction is not in accordance with the intention of the parties.

It will better bear another interpretation, which is this: Gold

being at the price of $2.25, and having reference to that fact as giving their value, the one party agrees to deliver, and the other to receive, the goods at $1.25 per dozen. This price named should not, however, be fixed and absolute. If the price of gold shall change, the price of the goods shall also change. But they do not propose to embarrass themselves about trifles, and the gold regulation shall be modified by the extent of the change in its price. If it varies more than twenty-five per cent, we agree that that shall be deemed an important change, and shall of itself work a change in the price of the goods.

If the variation does not exceed twenty-five per cent, it will not necessarily be important, and we agree that it shall not affect the price of the goods, unless it continues so long as to affect the general price of merchandise. If it does so continue, and does so affect general prices, then that variation shall also regulate this contract.

The parties saw and knew that great changes in the value of gold had taken place in former times, and in their times, by which the purchasing power of the currency in circulation was greatly affected. They knew also that a slight change produced but little effect. To make them say, then, that a change of one hundred or one thousand per cent should not of itself change the price of the goods to be delivered, but that a change of twenty-five per cent only should have that effect, is contrary to all reason. On the other hand, to allow them to say that the large change in gold should of itself change the price of the goods, but that a change of twenty-five per cent, or under, should not affect the price of the goods, unless it was so long continued as to affect the general price of merchandise, is in harmony with the whole transaction.

It is not necessary to pursue the illustrations which have been or may be given of the effect of the different readings of the contract. We are satisfied that there was error in its construction by the Circuit Court, and that the case must be remanded for a new trial; and it is

So ordered.

PULLMAN v. UPTON.

Assumpsit by an assignee in bankruptcy of an insurance company against the holder of shares of its stock, to enforce the collection of the balance due thereon, the same not having been paid pursuant to the order of the court sitting in bankruptcy. Plea, *non assumpsit*. *Held*, 1. That the plea admits the existence of the corporation, and that the State alone can raise the question whether the corporate stock had been properly increased. 2. That the transferee of stock, who caused the transfer to be made to himself on the books of the corporation, although he holds it as collateral security for a debt of his transferrer, is liable for such balance to such assignee.

ERROR to the Circuit Court of the United States for the Northern District of Illinois.

This was assumpsit by Clark W. Upton, assignee in bankruptcy of the Great Western Insurance Company, against Albert B. Pullman, a stockholder in said company, to recover the balance remaining unpaid upon his stock.

The capital stock of the company was originally $100,000, and it was, Aug. 22, 1870, by the alleged consent and action of the stockholders, increased to $5,000,000. The company sustained heavy losses by the fire at Chicago, on the 8th and 9th of October, 1871; and it was duly adjudicated a bankrupt Feb. 6, 1872, and Upton was appointed its assignee. The court in which the proceedings in bankruptcy were pending, ordered, July 7, 1872, that the entire amount unpaid on the capital stock of the company be paid to the assignee, on or before the 15th of August then next ensuing; and that, in default of payment, the assignee proceed to collect the same. Conformably to the directions of the court, notice of this order was given to the stockholders.

One Myers owned twenty-five shares of the stock, of $100 each, whereon twenty per cent had been paid; and, being indebted to Pullman, assigned them to him, in the summer of 1871, as collateral security. Pullman, on the 7th of the following October, caused them to be transferred to him on the books of the company; and he then surrendered the old certificate, and took a new one for the same number of shares.

On the trial, Upton offered, and the court admitted in evidence, certain papers; to the admission of which Pullman objected, on

the ground that each of them was immaterial. The court having admitted said order directing the payment of the balance due upon the stock, Pullman offered to prove that a less assessment would have sufficed to cover the losses of the company. To the rejection of said offer, and to the overruling his objection to each paper so admitted, he in due time excepted. Judgment having been rendered against him by the District Court, which was affirmed in the Circuit Court, he sued out this writ, and assigns for error the rulings of the District Court, upon his objection to the offered evidence, as follows: —

The District Court erred in admitting in evidence (1) the pamphlet copy of the charter of said company; (2) the certified copy of the proceedings for increase of the capital stock of said company; (3) the certified copy of the amended charter of said company, and the certified copy of the report of said company, dated December, 1870, and the license of said company to do business, and the auditor's report of the examination of the affairs of said company; (4) the order of said District Court, in bankruptcy, making an assessment on the stock of said company; (5) the notice to Pullman of said assessment.

Mr. H. S. Monroe for the plaintiff in error.

Mr. L. H. Boutell, contra.

MR. JUSTICE STRONG delivered the opinion of the court.

The evidence to which the defendant below objected, and to the admission of which he took exception, was quite unimportant. Its object was to prove the existence of the corporation and the increase of the corporate stock. But the existence of the corporation was admitted by the defendant's plea of *non assumpsit;* and whether the corporate stock had been properly increased was a question the State only could raise. It is well settled, that, in a suit by a corporation, a plea of the general issue admits the competency of the plaintiff to sue as such. *The Society for the Propagation of the Gospel, &c.* v. *The Town of Pawlet*, 4 Pet. 480. The first three assignments of error may, therefore, be dismissed without further consideration.

That the fourth and fifth assignments are without merit plainly appears in the report of *Sanger* v. *Upton* (91 U. S. 56), where a similar order and notice to the stockholders was held

not merely sufficient, but conclusive as to the right of the assignee to bring suit to enforce the payment of unpaid balances due for the corporate stock.

The only question remaining is, whether an assignee of corporate stock, who has caused it to be transferred to himself on the books of the company, and holds it as collateral security for a debt due from his assignor, is liable for unpaid balances thereon to the company, or to the creditors of the company, after it has become bankrupt.

That the original holders and the transferees of the stock are thus liable we held in *Upton* v. *Trebilcock* (91 id. 45), *Sanger* v. *Upton* (id. 56), and *Webster* v. *Upton* (id. 65); and the reasons that controlled our judgment in those cases are of equal force in the present. The creditors of the bankrupt company are entitled to the whole capital of the bankrupt, as a fund for the payment of the debts due them. This they cannot have, if the transferee of the shares is not responsible for whatever remains unpaid upon his shares; for by the transfer on the books of the corporation the former owner is discharged. It makes no difference that the legal owner—that is, the one in whose name the stock stands on the books of the corporation—is in fact only, as between himself and his debtor, a holder for security of the debt, or even that he has no beneficial interest therein. This was ruled in *The Newry, &c. Railway Co.* v. *Moss*, 14 Beav. 64. In that case, it was said that only those persons who appear to be shareholders on the register of the company are liable to pay calls. In *Re Phœnix Life Insurance Co., Hoare's Case* (2 John. & H. 229), it appeared that certain shares had been settled upon Hoare and others, as trustees in a marriage settlement. The trustees had no beneficial interest, but they were registered as shareholders, and the word "trustees" added in the margin of the register, and they receipted for dividends as trustees. It was held by Vice-Chancellor Wood that they were liable as contributories to the full extent, and not merely to the extent of the trust estate. It was said, "A person who is a shareholder is absolutely liable, although he may be bound to apply the proceeds of the shares upon a trust." In *The Empire City Bank* (8 Abb. (N. Y.) Pr. 192, reported also in 18 N. Y. 200), the Court of Appeals held persons responsible as

stockholders in respect to the stock standing in their names on the books of the bank, though they held the stock only by way of hypothecation as collateral security for money loaned, and they were held liable for an amount equal to their stock for the unsatisfied debts of the bank. In *Adderly* v. *Storm* (6 Hill (N. Y.), 624), it appeared that one Bush, in 1837, being indebted to the defendants, transferred to them, on the books of a company, certain shares of stock, and delivered to them the usual certificates. On receiving the certificates, the defendants gave Bush a receipt, stating they had received the stock, which they were to dispose of at any time for $200 per share, applying the proceeds to the payment of the notes which Bush owed them, or, if not sold when the notes should be paid, to return the scrip to Bush, or account for it. The last of the notes was paid in September, 1838, and the defendants returned the scrip to Bush, giving also a power of attorney for the transfer of the stock. The retransfer was not made, however, until March 2, 1840, and the defendants were held liable, as stockholders, for a debt of the company contracted in January, 1840; and this, it was said, would be the law, though the plaintiff may not have known, at the time he trusted the company, that the defendants could be reached. So, in *Holyoke Bank* v. *Burnham* (11 Cush. (Mass.) 183), it was decided that a transfer of stock on the books of the bank, intended merely to be held as collateral security, makes the holder liable for the bank debts. It was said, the creditor is to be considered the absolute owner, and that his arrangement with his debtor cannot change the character of the ownership. And in *Wheelock* v. *Kost et al.* (77 Ill. 296) the doctrine was asserted, that when shares of stock in a banking corporation have been hypothecated, and placed in the hands of the transferee, he will be subjected to all the liabilities of ordinary owners, for the reason that the property is in his name, and the legal ownership appears to be in him.

These decisions are sufficient to vindicate the judgment of the court below. The case of the plaintiff in error is a hard one, but he cannot be relieved consistently with due observance of well-established law.

Judgment affirmed.

PEUGH v. DAVIS.

1. A deed of lands, absolute in form, when executed as security for a loan of money, will in equity be treated as a mortgage; and evidence, written or oral, tending to show the real character of the transaction is admissible.
2. An equity of redemption is so inseparably connected with a mortgage, that it cannot be waived or abandoned by any stipulation of the parties made at the time, even if embodied in the mortgage.
3. A subsequent release of the equity of redemption to the mortgagee must appear by a writing importing in terms a transfer of the mortgagor's interest, or such facts be shown as will estop him from asserting any interest in the premises; and it must be for an adequate consideration.
4. In determining whether a transaction was intended to operate as such release, the fact that the then value of the property was greatly in excess of the amount paid, and of that originally secured, and the fact that the mortgagor retained possession and subsequently enclosed and cultivated the land, are strong circumstances tending to show that a release was not intended.
5. Where a deed, absolute in form, was made as security for a loan, papers thereafter executed, which refer to the transaction as one of purchase will be considered in connection with the deed, and will not be regarded in a court of equity as any more conclusive of a subsequent release than the form of the original instrument was of a sale of the property.

APPEAL from the Supreme Court of the District of Columbia.

This was a suit in equity, brought June 28, 1869, to redeem certain real property in Washington City. The defence consisted in an alleged release of the equity of redemption, to establish which, in addition to the testimony of the parties, the defendant relied principally upon the following papers: —

"Whereas the undersigned, Samuel A. Peugh, of the city of Washington, in the District of Columbia, having heretofore sold and conveyed to Henry S. Davis, of the said city, two certain squares of ground in said city, the same being squares numbered nine hundred and ten (910) and nine hundred and eleven (911) in the said city, the said sale and conveyance having been by the said Peugh made with full assurance and promise of a good and indefeasible title in fee-simple, though the said conveyance contains only a special warranty, the said conveyance to said Davis bearing date on the fourth day of March, A.D. 1857, and being recorded on the seventh day of September, A.D. 1857.

"And whereas the title to the said squares so conveyed as aforesaid to said Davis having been now questioned and disputed, the said Peugh doth now, for himself, his heirs, executors, and adminis-

trators, promise, covenant, and agree to and with the said Henry S. Davis, his heirs and assigns, in the manner following; that is, that he, the said Samuel A. Peugh, and his heirs shall and will warrant and for ever defend the said squares of ground and appurtenances as conveyed, as aforesaid, unto the said Henry S. Davis, his heirs and assigns, from and against the claims of all persons whomsoever.

"And, further, that the said Peugh, and his heirs, executors, and administrators, shall and will pay and refund to said Davis, his heirs or assigns, all and singular the loss, costs, damage, and expenses, including the consideration in said deed or conveyance, which or to which the said Davis, his heirs or assigns, shall lose, incur, pay, or be subject to, by reason of any claim or litigation against or on account of said squares of ground, or either of them.

"And for the full and faithful observance and performance of all the covenants and agreements aforesaid, and for the payment of all the sum or sums of money as therein provided, in the manner prescribed as aforesaid, the said Samuel A. Peugh doth hereby bind himself, his heirs, executors, and administrators, and each and every of them, firmly by these presents.

"In testimony whereof, the said Samuel A. Peugh doth hereto so set his hand and seal on this ninth day of February, in the year of our Lord 1858.

"S. A. PEUGH. [SEAL.]

"Signed, sealed, and delivered in
the presence of
"FRANCIS MOHUN.
"WM. H. WARD."

"WASHINGTON, D. C., Feb. 9, 1858.

"Received of Henry S. Davis $2,000, the same being in full for the purchase of squares Nos. 910 and 911 in the city of Washington

"$2,000. S. A. PEUGH."

The other facts sufficiently appear in the opinion of the court.

The decree at special term dismissing the bill was at general term affirmed; and the complainant appealed to this court.

Mr. Richard T. Merrick and *Mr. T. T. Crittenden* for the appellant.

1. A deed which is in fact security for a loan is a mortgage, in contemplation of a court of equity, and whether a conveyance absolute on its face will take effect as a mortgage depends pri-

marily, if not exclusively, on the nature of the consideration. *Morris* v. *Nixon*, 1 How. 118; *Babcock* v. *Wyman*, 19 id. 289; *Price* v. *Robinson*, 13 Cal. 116; *Huntley* v. *Wheelwright*, 29 Md. 341.

2. A court of equity will not allow the right of redemption to be defeated by any agreement making that which is really a mortgage a conditional sale, but, where the transaction is doubtful, will incline to give effect to the instrument as a mortgage. *Russell* v. *Southard*, 12 How. 139; *Dougherty* v. *Colgan*, 6 Gill & J. (Md.) 275; *Artz* v. *Glover*, 21 Md. 456; *Baugh* v. *Merryman*, 32 id. 185.

3. The burden of proof is on the mortgagee, who claims a release of the equity of redemption, to show that it was made fairly, deliberately, and for an adequate consideration. Unless the transaction be fair and unmixed with any advantage taken by him of the use of his incumbrance, or of the necessitous circumstances of the mortgagor, equity will hold the parties to their original relation of debtor and creditor. *Dougherty* v. *Colgan*, 6 Gill & J. (Md.) 275; *Mills* v. *Mills*, 26 Conn. 213; *Hyndman* v. *Hyndman*, 19 Vt. 9; *Villa* v. *Rodriguez*, 12 Wall. 323; *Williams* v. *Owen*, 5 Myl. & Cr. 303; *Russell* v. *Southard*, *supra;* 2 White & Tudor, Lead. Cas. in Eq. (4th Am. ed.). pp. 1983, 1984, 1995.

Mr. Walter D. Davidge for the appellee.

The mortgagee was under no disability to purchase the equity of redemption; and the validity of the purchase does not, to use the language of this court, "depend upon his ability afterwards to show that he paid for the property all that any one would have been willing to give." *Russell* v. *Southard*, 12 How. 139. See also *Villa* v. *Rodriguez*, 12 Wall. 323; 3 Sugden, V. & P. (10th ed.) 227, 228; *Knight* v. *Majoribanks*, 2 Mac. & G. 10, *Webb* v. *York*, 2 Sch. & Lef. 661; *Conway's Ex.* v. *Alexander*, 7 Cranch, 218; *Hicks* v. *Hicks*, 5 Gill & J. (Md.) 85; *Trall* v. *Skinner*, 17 Pick. (Mass.) 213; *Wynkoop* v. *Cavring et al.*, 21 Ill 570. Such a transaction will not be set aside, except for manifest unfairness, or gross inadequacy of price; and neither of those grounds for relief is averred. The complainant testified in his own behalf, but was silent upon the subject of the value of the property.

More than eleven years elapsed between the date of the transaction now sought to be impeached and the filing of this bill, and no explanation of the delay is furnished. The laches of the complainant, and his long acquiescence in the assertion of adverse rights by the defendant, are a bar to this suit. *Badger* v. *Badger*, 2 Wall. 87; *Marsh* v. *Whitmore*, 21 id. 178.

MR. JUSTICE FIELD delivered the opinion of the court.

This is a suit in equity to redeem certain property, consisting of two squares of land in the city of Washington, from an alleged mortgage of the complainant. The facts, out of which it arises, are briefly these: In March, 1857, the complainant, Samuel A. Peugh, borrowed from the defendant, Henry S. Davis, the sum of $2,000, payable in sixty days, with interest at the rate of three and three-fourths per cent a month, and executed as security for its payment a deed of the two squares. This deed was absolute in form, purporting to be made upon a sale of the property for the consideration of the $2,000, and contained a special covenant against the acts of the grantor and parties claiming under him. This loan was paid at its maturity, and the deed returned to the grantor.

In May following, the complainant borrowed another sum from the defendant, amounting to $1,500, payable in sixty days, with the same rate of interest, and as security for its payment redelivered to him the same deed. Upon this sum the interest was paid up to the 6th of September following. The principal not being paid, the defendant placed the deed on record on the 7th of that month. In January, 1858, a party claiming the squares under a tax title brought two suits in ejectment for their recovery. The defendant thereupon demanded payment of his loan, as he had previously done, but without success.

On the 9th of February following, the complainant obtained from the defendant the further sum of $500, and thereupon executed to him an instrument under seal, which recited that he had previously sold and conveyed to the defendant the squares in question; that the sale and conveyance were made with the assurance and promise of a good and indefeasible title in fee-simple; and that the title was now disputed. It contained a general covenant warranting the title against all par

ties, and a special covenant to pay and refund to the defendant the costs and expenses, including the consideration of the deed, to which he might be subjected by reason of any claim or litigation on account of the premises. Accompanying this instrument, and bearing the same date, the complainant gave the defendant a receipt for $2,000, purporting to be in full for the purchase of the land.

The question presented for determination is whether these instruments, taken in connection with the testimony of the parties, had the effect of releasing the complainant's equity of redemption. It is insisted by him that the $500 advanced at the time was an additional loan, and that the redelivered deed was security for the $2,000, as it had previously been for the $1,500. It is claimed by the defendant that this money was paid for a release of the equity of redemption which the complainant offered to sell for that sum, and at the same time to warrant the title of the property and indemnify the defendant against loss from the then pending litigation.

It is an established doctrine that a court of equity will treat a deed, absolute in form, as a mortgage, when it is executed as security for a loan of money. That court looks beyond the terms of the instrument to the real transaction; and when that is shown to be one of security, and not of sale, it will give effect to the actual contract of the parties. As the equity, upon which the court acts in such cases, arises from the real character of the transaction, any evidence, written or oral, tending to show this is admissible. The rule which excludes parol testimony to contradict or vary a written instrument has reference to the language used by the parties. That cannot be qualified or varied from its natural import, but must speak for itself. The rule does not forbid an inquiry into the object of the parties in executing and receiving the instrument. Thus, it may be shown that a deed was made to defraud creditors, or to give a preference, or to secure a loan, or for any other object not apparent on its face. The object of parties in such cases will be considered by a court of equity: it constitutes a ground for the exercise of its jurisdiction, which will always be asserted to prevent fraud or oppression, and to promote justice. *Hughes* v. *Edwards*, 9 Wheat. 489; *Russell* v. *Southard*,

12 How. 139; *Taylor* v. *Luther*, 2 Sumn. 228; *Pierce* v. *Robinson*, 13 Cal. 116.

It is also an established doctrine that an equity of redemption is inseparably connected with a mortgage; that is to say, so long as the instrument is one of security, the borrower has in a court of equity a right to redeem the property upon payment of the loan. This right cannot be waived or abandoned by any stipulation of the parties made at the time, even if embodied in the mortgage. This is a doctrine from which a court of equity never deviates. Its maintenance is deemed essential to the protection of the debtor, who, under pressing necessities, will often submit to ruinous conditions, expecting or hoping to be able to repay the loan at its maturity, and thus prevent the conditions from being enforced and the property sacrificed.

A subsequent release of the equity of redemption may undoubtedly be made to the mortgagee. There is nothing in the policy of the law which forbids the transfer to him of the debtor's interest. The transaction will, however, be closely scrutinized, so as to prevent any oppression of the debtor. Especially is this necessary, as was said on one occasion by this court, when the creditor has shown himself ready and skilful to take advantage of the necessities of the borrower. *Russell* v. *Southard*, *supra*. Without citing the authorities, it may be stated as conclusions from them, that a release to the mortgagee will not be inferred from equivocal circumstances and loose expressions. It must appear by a writing importing in terms a transfer of the mortgagor's interest, or such facts must be shown as will operate to estop him from asserting any interest in the premises. The release must also be for an adequate consideration; that is to say, it must be for a consideration which would be deemed reasonable if the transaction were between other parties dealing in similar property in its vicinity. Any marked undervaluation of the property in the price paid will vitiate the proceeding.

If, now, we apply these views to the question before us, it will not be difficult of solution. It is admitted that the deed of the complainant was executed as security for the loan obtained by him from the defendant. It is, therefore, to be treated as a mortgage, as much so as if it contained a condition

that the estate should revert to the grantor upon payment of the loan. There is no satisfactory evidence that the equity of redemption was ever released. The testimony of the parties is directly in conflict, both being equally positive, — the one, that the advance of $500 in February, 1858, was an additional loan; and the other, that it was made in purchase of the mortgagor's interest in the property. The testimony of the defendant with reference to other matters connected with the loan is, in several essential particulars, successfully contradicted. His denial of having received the instalments of interest prior to September, 1857, and his hesitation when paid checks for the amounts with his indorsement were produced, show that his recollection cannot always be trusted.

Aside from the defective recollection of the creditor, there are several circumstances tending to support the statement of the mortgagor. One of them is that the value of the property at the time of the alleged release was greatly in excess of the amount previously secured with the additional $500. Several witnesses resident at the time in Washington, dealers in real property, and familiar with that in controversy and similar property in its vicinity, place its value at treble that amount. Some of them place a still higher estimate upon it. It is not in accordance with the usual course of parties, when no fraud is practised upon them, and they are free in their action, to surrender their interest in property at a price so manifestly inadequate. The tax title existed when the deed was executed, and it was not then considered of any validity. The experienced searcher who examined the records pronounced it worthless, and so it subsequently proved.

Another circumstance corroborative of the statement of the mortgagor is, that he retained possession of the property after the time of the alleged release, enclosed it, and either cultivated it or let it for cultivation, until the enclosure was destroyed by soldiers at the commencement of the war in 1861. Subsequently he leased one of the squares, and the tenant erected a building upon it. The defendant did not enter into possession until 1865. These acts of the mortgagor justify the conclusion that he never supposed that his interest in the property was gone, whatever the mortgagee may have thought.

Parties do not usually enclose and cultivate property in which they have no interest.

The instrument executed on the 9th of February, 1858, and the accompanying receipt, upon which the defendant chiefly relies, do not change the original character of the transaction. That instrument contains only a general warranty of the title conveyed by the original deed, with a special covenant to indemnify the grantee against loss from the then pending litigation. It recites that the deed was executed upon a contract of sale contrary to the admitted fact that it was given as security for a loan. The receipt of the $2,000, purporting to be the purchase-money for the premises, is to be construed with the instrument, and taken as having reference to the consideration upon which the deed had been executed. That being absolute in terms, purporting on its face to be made upon a sale of the property, the other papers referring to it were drawn so as to conform with those terms. They are no more conclusive of any actual sale of the mortgagor's interest than the original deed. The absence in the instrument of a formal transfer of that interest leads to the conclusion that no such transfer was intended.

We are of opinion that the complainant never conveyed his interest in the property in controversy except as security for the loan, and that his deed is a subsisting security. He has, therefore, a right to redeem the property from the mortgage. In estimating the amount due upon the loan, interest only at the rate of six per cent per annum will be allowed. The extortionate interest stipulated was forbidden by statute, and would, in a short period, have devoured the whole estate. The defendant should be charged with a reasonable sum for the use and occupation of the premises from the time he took possession in 1865, and allowed for the taxes paid and other necessary expenses incurred by him.

The decree of the Supreme Court of the District must be reversed, and the cause remanded for further proceedings, in accordance with this opinion; and it is

So ordered.

DIAL v. REYNOLDS.

1. Except in cases arising under the bankrupt law, a court of the United States cannot enjoin a party from proceeding in a State court.
2. A bill of foreclosure is bad for misjoinder of parties and for multifariousness, where persons are made defendants thereto who claim title adversely to the mortgagor and the complainant, and the latter seeks in that suit to litigate and settle his rights.

APPEAL from the Circuit Court of the United States for the Eastern District of Tennessee.

The facts are stated in the opinion of the court.

Submitted on printed arguments by *Mr. J. M. Thornburgh* for the appellant.

There was no opposing counsel.

MR. JUSTICE SWAYNE delivered the opinion of the court.

The original bill was filed by Lyford, as trustee, and Staatsman. Reynolds demurred. Subsequently Lyford resigned his place as such trustee, and Dial was appointed in his stead, pursuant to a law of Tennessee. Dial and Staatsman filed an amended and supplemental bill. To this bill Reynolds also demurred. Dial and Staatsman filed another amended bill, and Reynolds again demurred. All the bills set forth substantially the same case. The facts alleged may be briefly stated. A deed of trust was executed by Cooper to Lyford, to secure certain liabilities of the grantor to Staatsman, and for other purposes. Reynolds asserted title in himself to the property covered by the deed. He claimed adversely to all the other parties. He had before sued another party for the premises. The case was brought to this court for final determination. It was decided against him. He thereafter commenced another action of ejectment in the proper State court, which was still pending. The bill seeks to foreclose the deed of trust, to quiet the title of the trustee, to remove the cloud cast upon it by Reynolds, and to enjoin him finally from further prosecuting his pending action of ejectment.

The Circuit Court sustained the demurrers and dismissed the bills. The complainants appealed to this court. The case was submitted here without oral argument. The counsel for the

appellants has filed a brief. None has been filed upon the other side.

There are two objections to these bills: —

1. The *gravamen* of what is desired as to Reynolds is an injunction to prevent his proceeding at law in the State court. Without this, all else is of no account. Any other remedy would be unavailing. Such an injunction, except under the Bankrupt Act, no court of the United States can grant. With this exception, it is expressly forbidden by law. Act of March 2, 1793, sect. 5 (1 Stat. 334); Rev. Stat., sect. 720; *Diggs* v. *Wolcott*, 4 Cranch, 179; *Peck et al.* v. *Jenness et al.*, 7 How. 612; *Watson* v. *Jones*, 13 Wall. 679.

2. It is well settled that in a foreclosure proceeding the complainant cannot make a person who claims adversely to both the mortgagor and mortgagee a party, and litigate and settle his rights in that case. Barbour, Parties in Equity, 493, and the cases there cited.

This case was one of fatal misjoinder and multifariousness, and the proper course for Reynolds was to demur. Story, Eq. Pl., sect. 284 *b*.

The complainants not having amended by striking out so much of the bills as related to him and his claim, it was proper for the court to sustain the demurrers and dismiss the bills.

Decree affirmed.

HITCHCOCK v. GALVESTON.

1. Where a city council is vested with power to cause sidewalks in the city to be constructed, it may authorize the mayor, and the chairman of the committee on streets and alleys, to make, in its behalf, and pursuant to its directions, a contract for doing the work.
2. A provision in the charter, that the city council shall not borrow for general purposes more than $50,000, does not limit the debt of the city, nor prohibit the council from entering into a contract involving an expenditure exceeding that amount, for special improvements, such as the grading and paving of streets and the construction of sidewalks, which are authorized by the charter.
3. Such a contract is not rendered wholly inoperative because it provides that the work done under it shall be paid for in bonds of the corporation, the

issue whereof was not authorized by law. The contract, so far as it is in other respects lawful, remains in force; and for the breach thereof the corporation is liable.

4. The contract in question in this case construed, and the proviso therein, in reference to the consent of the owners of the property fronting or abutting on the pavements to be laid, held to have reference to the materials to be used in constructing them, and not to the execution of the work itself.

ERROR to the Circuit Court of the United States for the Eastern District of Texas.

The judgment in the court below having been given upon a demurrer to the plaintiffs' petition, there is no controversy about the facts.

The city of Galveston, proposing to improve some of its sidewalks, entered into a contract with Dexter G. Hitchcock and James W. Byrnes, the plaintiffs, by which they agreed to furnish the materials and in whole or in part to do the work necessary for the improvement. The work consisted of filling, grading, curbing, and paving. By ordinance, it had been determined that the sidewalks should be paved with one or the other of the following-described materials: "Asphalt, hard bricks laid in a bed of Portland cement and properly grouted, concrete made of Portland cement mixed with other proper materials, or with tile or stone laid in a bed of Portland cement." The ordinance contains a provision that the "owners of lots or parts of lots who represent in each block a majority of the feet fronting or abutting upon any sidewalk of the same which is to be paved" shall have the "right . . . to select and designate which of the said materials they prefer and desire to be used in the construction of the pavement to be laid down on the said designated sidewalk," reserving, however, to the chairman of the committee on streets and alleys the right to determine the material to be used in case the lot-owners failed to make a selection. Of course, grading, filling, and curbing were a necessary preparation to any of these different modes of paving; and the city ordinances made provision for these several kinds of preparatory work, as well as for the paving. It was in pursuance of these ordinances that the contract was made. By it, the city engaged, in the first instance, to pay to the plaintiffs the sum of $1.75, in bonds of the city, styled "Galveston city bonds for sidewalk improvements," to be taken at par, for every square

yard of pavement laid down by them upon certain designated sidewalks, the pavement to be composed of asphalt in bulk, rolled solid to the thickness of three inches; provided, however, the plaintiffs "obtain the written consent of the owners of the property fronting or abutting upon the said sidewalks to the laying down of the said pavement, which written consent or selection of said pavement shall be filed in the mayor's office with the city clerk."

Following this conditional arrangement for an asphalt pavement, where such a pavement might be selected, the parties by the contract entered into other engagements. The city undertook to pay to the plaintiffs in the said bonds, to be taken at par, the sum of $1.25 for every cubic yard of filling necessary to be done "upon any and all of the said sidewalks preparatory to the laying of any pavement thereon," the above price to include not only the filling, but the grading, tamping, and rolling.

The contract next contained an engagement of the city to pay to the plaintiffs in the said bonds, to be taken at par, forty-five cents for each square foot of wooden curbing (to be composed or made of three-inch cypress) "that might be needed or used in filling up and grading the said sidewalks preparatory to putting down the said pavement, or any other."

The contract also bound the city to pay the plaintiffs for wooden curbing needed or used for putting down the pavements that were to be only six feet in width. In consideration of all these promises of the city, the plaintiffs bound themselves to lay down and fabricate the said pavement in the manner and style above set forth and stipulated; and they also bound themselves to fill, grade, tamp, roll, and curb the said sidewalks as above set forth and stipulated, and to receive in payment for all the said work the respective prices above stated in Galveston city bonds for sidewalk improvement at par. They further bound themselves to commence the work within twenty days, and to finish it without unnecessary delay.

Accordingly, they proceeded to fulfil their engagements. They made contracts for labor and materials, performed a large amount of work, completed the curbing and filling of some sidewalks, and were going on in earnest to finish the entire work, when,

at the expiration of forty-six days, they were compelled by force and by authority of the city to abandon their work without any fault of their own. On the 20th of April, 1874, the city council declared the contract null and void, and directed the mayor to notify the contractors to that effect; which he did, two days thereafter. Hence the present suit to recover damages for the breach of the contract.

The demurrer to the petition was sustained, and judgment rendered for the defendants. The plaintiffs sued out this writ of error.

Mr. F. Charles Hume and *Mr. S. S. Henkle* for the plaintiffs in error.

Where a municipal corporation has power to do certain work, it may order its agents, for it and in its name, to enter into the requisite contract, which will be binding upon it. *Burrill* v. *The City of Boston*, 2 Cliff. 590; *Ford* v. *Williams*, 21 How. 287; *San Antonio* v. *Lewis*, 9 Tex. 69; *Bank of Columbia* v. *Patterson*, 7 Cranch, 299; *Dunn* v. *Rector of St. Andrew's Church*, 14 Johns. (N. Y.) 118; *Glidden* v. *Unity*, 33 N. H. 577; 2 Kent, Com. 290; Angell & Ames, Corp., sect. 212; *Fitton* v. *Hamilton City*, 6 Nev. 196; *Smiley* v. *Mayor, &c.*, 6 Heisk. (Tenn.) 604; Story, Contr., sect. 312; *Hoyt* v. *Thompson's Executor*, 19 N. Y. 207; *Abby* v. *Billups*, 35 Miss. 618; *Alton* v. *Mulledy*, 21 Ill. 76; Dillon, Mun. Corp., sects. 132, 374; Story, Agency, sect. 54; *Clark* v. *Mayor, &c. of Washington*, 12 Wheat. 40; *Fanning* v. *Gregorie et al.*, 16 How. 524; *Sharp* v. *Mayor, &c. of New York*, 25 How. (N. Y.) Pr. 388; *Dickerson* v. *Peters*, 71 Pa. St. 53; *Northern Central Railway Co.* v. *Mayor, &c. of Baltimore*, 21 Md. 93.

The absence of authority to issue the bonds does not impair the validity and obligation of the contract. They are merely evidences of indebtedness; and, if they are absolutely void, that indebtedness remains, and the city is liable upon the contract, and for damages occasioned by the breach of it. *State Bank* v. *Leavitt*, 14 N. Y. 162; *Leavitt* v. *Curtis et al.*, 15 id. 9; *Oneida Bank* v. *Ontario Bank*, 21 id. 490; *Argenti* v. *City of San Francisco*, 16 Cal. 255; *Maher* v. *Chicago*, 38 Ill. 266; *Chicago* v. *The People*, 48 id. 416.

By the contract, the city intended to incur a direct liability

to the contractor, and for payments made reimburse itself by assessments upon, and in the event of their non-payment by sales of, the lots bordering upon the streets improved. Where, as in this case, there is no express limitation upon the power of the city, such a contract is valid. *Allen* v. *City of Janesville*, 35 Wis. 403; *Forltz* v. *Cincinnati*, 2 Handy (Ohio), 261; *Sleeper* v. *Bullen*, 6 Kan. 300; *Maher* v. *Chicago*, 38 Ill. 266; *Chicago* v. *The People*, 48 id. 416; *Louisville* v. *Hyatt*, 5 B. Mon. (Ky.) 199; *Kearney* v. *City of Covington*, 1 Metc. (Ky.) 339; *Swift* v. *Williamsburgh*, 24 Barb. (N. Y.) 427.

The city having so contracted, and failed or refused to make such assessments and collections with due diligence and pay the contractor, is liable to suit. *Baldwin* v. *Oswego*, 1 Abb. (N. Y.) App. Dec. 62; *Cummings* v. *Brooklyn*, 11 Paige (N. Y.), 596; *Allen* v. *City of Janesville*, *Forltz* v. *Cincinnati*, *Sleeper* v. *Bullen*, *Louisville* v. *Hyatt*, *Kearney* v. *Covington*, *Swift* v. *Williamsburgh*, and *Argenti* v. *City of San Francisco*, *supra*.

The provision that the council shall not borrow for general purposes more than $50,000 has no bearing whatever upon this contract for special improvements. *Cummings* v. *Brooklyn*, *Baldwin* v. *Oswego*, *Allen* v. *City of Janesville*, and *Argenti* v. *City of San Francisco*, *supra*.

Mr. W. P. Ballinger and *Mr. George Flournoy*, *contra*.

The city of Galveston had no express authority to make the contract in question, or to issue bonds in payment of the work done thereunder, and none can be implied from their general powers. *Police Jury* v. *Britton*, 15 Wall. 566; *The Mayor* v. *Ray*, 19 id. 468; *Williams* v. *Davidson*, 43 Tex. 1; Dillon, Mun. Corp., sect. 393. The contract to pay in such bonds for improvements of that description was therefore void. *Union Pacific Railroad* v. *Lincoln County*, 3 Dill. 300; *State* v. *Swift*, 11 Nev. 167; *Thomas* v. *Port Huron*, 27 Mich. 320; *Lucas et al.* v. *San Francisco*, 7 Cal. 463; *Roeck v. Newark*, 33 N. J. L. 129; *New Albany* v. *Sweeney*, 13 Ind. 245; *Johnson* v. *Indianapolis*, 16 id. 227; *McCullough* v. *Brooklyn*, 23 Wend. (N. Y.) 458; *Lake* v. *Trustees of Williamsburgh*, 4 Den. (N. Y.) 520; *Hunt* v. *Utica*, 18 N. Y. 442; *Swift* v. *Williamsburgh*, 24 Barb. (N. Y.) 427; *Baldwin* v. *Oswego*, 1 Abb. (N. Y.) App. Dec. 62; *Hale* v. *Kenosha*, 29 Wis. 599; *Bridge-*

port v. *New York & New Haven Railroad Co.*, 36 Conn. 255; *Alexander et al.* v. *The Mayor, &c. of Baltimore*, 5 Gill (Md.), 383; *Lansing* v. *Lansing*, 25 Mich. 207; *Ruppert et al.* v. *The Mayor, &c. of Baltimore*, 23 Md. 184; *Annapolis* v. *Harwood*, 32 id. 471; *Fairfield* v. *Ratcliff*, 20 Iowa, 396; *Head* v. *Providence Insurance Co.*, 2 Cranch, 127; *Zottman* v. *San Francisco*, 20 Cal. 96; *Nicholson Paving Co.* v. *Painter*, 35 id. 699; *Whitehall* v. *Pulaski County*, 2 Dill. 249; *Hall & Argalls* v. *County of Marshall*, 12 Iowa, 142; *Regents' University* v. *Hart*, 7 Minn. 61; *King* v. *Brooklyn*, 42 Barb. (N. Y.) 627; *Richardson* v. *Brooklyn*, 34 id. 569; Dillon, Mun. Corp., sects. 55, 610, 653, 654.

The contract, if valid, will impose upon the city a liability exceeding $50,000, and is therefore in violation of that provision in the charter of the city which prohibits the council from borrowing for general purposes more than that sum. *Rogers* v. *Burlington*, 3 Wall. 654; *Middleton* v. *Alleghany County*, 37 Pa. St. 237; *McPherson* v. *Foster*, 43 Iowa, 48; *State* v. *Strader*, 25 Ohio St. 527.

The contract sued on is not valid, because, 1. The city council could not delegate the power to the mayor and the chairman of the committee on streets and alleys to make it; 2. The said mayor, &c., still further delegated the power to determine the paving of said sidewalks to the owners of the lots thereon. Dillon, Mun. Corp., sects. 60, 567, 618, 649, and notes; *Lyon* v. *Jerome*, 26 Wend. (N. Y.) 484; *Danforth* v. *Paterson*, 34 N. J. L. 163; *State* v. *City of New York*, 3 Duer (N. Y.), 131; *Goszler* v. *Georgetown*, 6 Wheat. 593; *Hyde* v. *Joyes*, 4 Bush (Ky.), 468; *Mayor of Baltimore* v. *Porter*, 18 Md. 284; *Oakland* v. *Carpentier*, 13 Cal. 540; *Ruggles* v. *Collier*, 43 Mo. 353; *East St. Louis* v. *Wehrung*, 50 Ill. 28; *Day* v. *Green*, 4 Cush. (Mass.) 433; *Coffin* v. *Nantucket*, 5 id. 269; *Ruggles* v. *Nantucket*, 11 id. 433; *Ex parte Winsor*, 3 Story, 411; *Scofield* v. *Lansing*, 17 Mich. 437; *Schenley* v. *Alleghany*, 36 Pa. St. 62.

It results from the want of authority to bind the city by the contract sued on that there is no liability for the filling and curbing which it is alleged has been performed by the plaintiffs. Cooley, Const. Lim. 196; *Bonesteel* v. *Mayor of New York*,

22 N. Y. 162; *McDonald* v. *Mayor of New York*, 4 Thomp. & C. (N. Y.) 177, and cases cited; *Murphy* v. *Louisville*, 9 Bush (Ky.), 189; *Craycraft* v. *Selvage*, 10 id. 696; *Reilly* v. *Philadelphia*, 60 Pa. St. 467.

The contract was subject to the condition that the lot owners fronting or abutting upon the sidewalks should select the kind of pavement, and that their written consent to laying it down should be obtained by the plaintiffs. The pleadings do not aver the performance of this condition, and without it the contract, even if authorized by the charter, was not binding upon the city.

MR. JUSTICE STRONG, after stating the case, delivered the opinion of the court.

The demurrer to the plaintiffs' petition raises several questions, all relating to the validity or construction of the agreement between the parties. These questions were not all considered by the Circuit Court, but, as we are of opinion that court erred in giving judgment for the defendant, we cannot overlook any consideration that could justify such a judgment.

It is contended, on behalf of the defendants, that the city of Galveston had no power given to it by law to make the contract which was made, or bind itself to pay with the bonds described, for sidewalk improvements. The contract was made on behalf of the city by the mayor and the chairman of the committee on streets and alleys, who had been authorized and directed by ordinance "to enter into and make contract or contracts with proper and responsible parties to fill up, grade, curb, and pave the said sidewalks" (those designated in the ordinance and mentioned in the contract); and, as the petition of the plaintiffs averred, it was ratified and approved by the city council as the act and deed of the defendant. The authority of the council is found in the charter of the city. The first section of tit. 9, art. 1, of the charter declares that the city council shall be invested with full power and authority to grade, shell, repair, pave, or otherwise improve any avenue, street, or alley, or any portion thereof, within the limits of said city, whenever by a vote of two-thirds of the aldermen present they may deem such improvement to be for the public interest.

And sect. 8, art. 3, tit. 4, confers upon the city council power "to establish, erect, construct, regulate, and keep in repair bridges, culverts and sewers, sidewalks and crossways, and to regulate the construction and use of the same;" and the section adds, that "the cost of the construction of sidewalks shall be defrayed by the owners of the lot, or part of lot or block fronting on the sidewalk, and the cost of any sidewalk constructed by the city shall be collected, if necessary, by the sale of the lot, or part of lot or block on which it fronts, together with the cost of collection, in such a manner as the city council may, by ordinance, provide; and a sale of any lot, or part of lot or block, to enforce collection of cost of sidewalks, shall convey a good title to the purchaser, and the balance of the proceeds of sale, after paying the amount due the city, and cost of sale, shall be paid by the city to the owner."

The city is thus authorized itself to construct sidewalks, and, though the cost of construction is to be defrayed by the abutting lot-owners, the city is to collect from them the cost, and, in case of the sale of any lot made to enforce the collection, the city is to pay to the owner the surplus of any proceeds of sale remaining after payment of the amount due to it. It is not to be denied that this section confers upon the city council plenary authority to construct the sidewalks, and to do whatever is necessary for the construction, not prohibited by some other provision of law. The resort to the lot-owners is to be after the work has been done, after the expense has been incurred, and it is to be for reimbursement to the city.

If the city council had lawful authority to construct the sidewalks, involved in it was the right to direct the mayor, and the chairman of the committee on streets and alleys, to make a contract on behalf of the city for doing the work. We spend no time in vindicating this proposition. It is true, the council could not delegate all the power conferred upon it by the legislature, but, like every other corporation, it could do its ministerial work by agents. Nothing more was done in this case. The council directed the pavements, ordering them to be constructed of one or the other of several materials, but giving to the owners of abutting lots the privilege of selecting which, and reserving to the chairman of their committee authority to

select, in case the lot-owners failed. The council also directed how the preparatory work should be done. There was, therefore, no unlawful delegation of power. But, if there had been, the contract was ratified by the council after it was made. A sufficient ratification, if any was necessary, is averred in the petition, and again and especially in the amended petition.

Another objection to the validity of the contract, urged by the city, is founded upon a provision of the charter, that the council shall not borrow for general purposes, more than $50,000; and it is said the contract, if valid, creates a liability of the city exceeding that sum. This, however, does not appear in the contract itself, and this, perhaps, is a sufficient answer to the objection. But the limitation is upon the power to borrow money, and to borrow it for general purposes. It implies that there may be lawful purposes, which are not general in the sense in which that word is used in the charter. An examination of the whole instrument, and of the numerous and large powers conferred upon the council, as well as duties imposed, makes it evident that the provision could not have been intended to prohibit incurring an indebtedness exceeding the sum named. It is in no sense a limitation of the debt of the city. If it is, the grant of power the charter contains was an idle thing, and the duties imposed could not be performed. The council, as we have seen, is empowered to grade and pave the streets and to construct sidewalks. There is no express limitation of these powers. Their exercise necessarily involves large expenditure. Such expenditure is, therefore, authorized. It is a plain incident of the power, and it is a special expenditure. It is for a new work, unlike the work of keeping in repair. Conceding that it is a purpose of the act incorporating the city, it cannot be regarded as a general purpose; for, if it is, all purposes of the charter are general. Grading a street or making a sidewalk, where none had existed before, is a special improvement, not like repairs of constant recurrence. By another article of defendant's charter, the city council was authorized to provide by ordinance special funds for special purposes, and to make the same disbursable only for the purpose for which the fund was created. For these reasons, we are of opinion that the limitation upon the power of the coun

cil to borrow for general purposes did not make the agreement with the plaintiffs invalid.

We come now to objections which the Circuit Court sustained. The learned judge held the contract inoperative, because by it the city agreed to pay for the work to be done, and the contractors agreed to receive in payment, at par, bonds of the city, denominated "Galveston city bonds for sidewalk improvement." These bonds were, by the ordinance that authorized their issue, made payable to bearer fifteen years after date; and the money realized from assessment on property fronting on sidewalks improved by means of their disposition was declared to be a special fund, and appropriated solely as a sinking fund for their redemption. The issue of such bonds was held by the court to be transgressive of the power of the city, and the ruling was thought to be supported by the decision of this court in the cases of *Police Jury* v. *Britton*, 15 Wall. 566, and *The Mayor* v. *Ray*, 19 id. 468.

In the view which we shall take of the present case, it is, perhaps, not necessary to inquire whether those cases justify the court's conclusion; for, if it were conceded that the city had no lawful authority to issue the bonds, described in the ordinance and mentioned in the contract, it does not follow that the contract was wholly illegal and void, or that the plaintiffs have no rights under it. They are not suing upon the bonds, and it is not necessary to their success that they should assert the validity of those instruments. It is enough for them that the city council have power to enter into a contract for the improvement of the sidewalks; that such a contract was made with them; that under it they have proceeded to furnish materials and do work, as well as to assume liabilities; that the city has received and now enjoys the benefit of what they have done and furnished; that for these things the city promised to pay; and that after having received the benefit of the contract the city has broken it. It matters not that the promise was to pay in a manner not authorized by law. If payments cannot be made in bonds because their issue is *ultra vires*, it would be sanctioning rank injustice to hold that payment need not be made at all. Such is not the law. The contract between the parties is in force, so far as it is lawful.

There may be a difference between the case of an engagement made by a corporation to do an act expressly prohibited by its charter, or some other law, and a case of where legislative power to do the act has not been granted. Such a distinction is asserted in some decisions. But the present is not a case in which the issue of the bonds was prohibited by any statute. At most, the issue was unauthorized. At most, there was a defect of power. The promise to give bonds to the plaintiffs in payment of what they undertook to do was, therefore, at farthest, only *ultra vires;* and, in such a case, though specific performance of an engagement to do a thing transgressive of its corporate power may not be enforced, the corporation can be held liable on its contract. Having received benefits at the expense of the other contracting party, it cannot object that it was not empowered to perform what it promised in return, in the mode in which it promised to perform. This was directly ruled in *The State Board of Agriculture* v. *The Citizens' Street-Railway Co.*, 47 Ind. 407. There it was held, that "although there may be a defect of power in a corporation to make a contract, yet if a contract made by it is not in violation of its charter, or of any statute prohibiting it, and the corporation has by its promise induced a party relying on the promise and in execution of the contract to expend money and perform his part thereof, the corporation is liable on the contract." See also, substantially to the same effect, *Allegheny City* v. *McClurkin*, 14 Pa. St. 81; and, more or less in point, *Maher* v. *Chicago*, 38 Ill. 266; *Oneida Bank* v. *Ontario Bank*, 21 N. Y. 490; *Argenti* v. *City of San Francisco*, 16 Cal. 256; *Silver Lake Bank* v. *North*, 4 Johns. (N. Y.) Ch. 370.

We think, therefore, the Circuit Court erred in holding the contract of the city with the plaintiff invalid.

Nothing remains but to consider the extent of the proviso following the first clause of the agreement. It is insisted on behalf of the city, and it was so held by the circuit judge, that the proviso was a condition precedent to the performance of any part of the work, and was required to be performed before any part of the contract became binding on the city. Such is not our construction of the contract. The petition of the plaintiffs, with its amendments, sets forth the ordinances of

the city, and avers that the city, contemporaneously with this contract, made various other contracts with other parties for paving the sidewalks named, with the various materials respectively therein named, each conditioned, as was the contract with the plaintiffs, that the lot-owners should select the kind of pavement, whether asphalt or some other kind, directed by the ordinance. The plain object of this proviso was to save to the lot-owners the privilege given to them by the ordinance directing the pavements to be constructed. They were to be constructed, at all events, of one or the other of certain specified materials, and the lot-owners were allowed to select which. If in any block they preferred brick, the contractor for brick paving was to put down that kind of paving. If they preferred asphalt, the contractor for asphalt was to pave with that material. But the ordinance gave to the lot-owners no liberty of choice whether there should be a pavement or none, or whether the sidewalks should be filled, graded, curbed, and prepared for a pavement of some kind, or not. That was determined by the council. That work was absolutely directed to be done. And the contract, we think, followed the ordinance. In it the undertakings of the plaintiffs for paving, filling, grading, tamping, rolling, and curbing are kept distinct from each other, and it is only to laying down an asphalt pavement that the proviso required the consent of the lot-owners. No other construction is consistent with the other parts of the contract. The proviso follows immediately the provision for the asphalt pavement. It is succeeded by arrangements for the filling, grading, and rolling, in the language of the parties, "necessary and needed to be done upon any and all of the said sidewalks, preparatory to the laying of any pavement thereon." The contract, so far as it relates to the next subject, is still more significant. We refer to the agreement for the wooden curbing that might be needed or used in filling up and grading the said sidewalks, "preparatory to the putting down of the said pavement, or any other." From this it is evident the parties contemplated that the plaintiffs should do the preparatory work upon all the sidewalks intended to be improved; namely, the work needed to put those sidewalks in a fit condition to receive any one of the pavements prescribed

by the ordinance. Which one should crown the preparatory work was to be left primarily to the selection of the lot-owners in each block. If a majority of them chose asphalt, the plaintiffs were to do the work. If a majority chose some one other of the materials allowed in the ordinance, the contractor for a pavement made of that other material was to construct that pavement. The filling and curbing was to be done by the plaintiffs in any event, and it was only the paving thereafter respecting which the lot-owners had any voice.

This suit has not been brought for paving, nor for any breach of the defendant's contract respecting the paving. The claim is for damages caused by the abrogation or breach of the city's contract relating to other and distinct subjects. Hence it was not necessary to aver any consent of the owners of the property abutting upon the sidewalks.

We are, therefore, of opinion that the original and amended petitions sufficiently set forth a cause of action, and that the Circuit Court erred in sustaining the defendant's demurrer.

The judgment will be reversed, and the record remitted with instructions to give judgment on the demurrer against the defendant; and it is

So ordered.

MR. JUSTICE BRADLEY, with whom concurred MR. JUSTICE MILLER and MR. JUSTICE FIELD, dissenting.

I dissent from the judgment of the court in this case, being of opinion that the proviso requiring the assent of the property holders related to the entire work around each block, and not merely to the kind of pavement to be used; and that the contractors had no authority to do any work on any particular block, without such previous assent.

FRANCIS v. UNITED STATES.

A contract entered into between A. and the Quartermaster's Department of the Army, for the delivery of a number of cords of wood at a post on a military reservation, stipulated that no traders, sutlers, contractors, civilians, or others should be allowed to cut timber about said post, until all required by the United States for certain purposes was secured. The contractor cut a part of the wood on the reservation, when he was directed by the post commander to cut outside the reservation, which he did. Having performed his contract, he was paid in full for all the wood delivered thereunder. *Held*, that the contract prohibited him from cutting wood within the reservation, and that he cannot recover damages for any expense he incurred by reason of being compelled to cut and haul, from a point outside the reservation, the wood necessary to complete his contract.

APPEAL from the Court of Claims.

This suit was brought by Charles Francis, for the use of Nathan Myrick, to recover damages on account of extra expenses incurred in the performance of a contract entered into, May 8, 1869, between Francis and the chief quartermaster of the military department of Dakota, for the delivery by the former, on or before Jan. 15, 1870, of a number of cords of wood at certain military posts; among others, at Fort Ransom, Dakota Territory, one thousand cords. The contract "stipulated and agreed that no traders, sutlers, contractors, civilians, or others should be allowed to cut timber about the post of Fort Ransom, D. T., until all required by the United States, for certain purposes herein specified, should have been secured." This stipulation was inserted pursuant to General Order No. 18, which is as follows: —

"HEADQUARTERS DEPARTMENT OF DAKOTA,
"SAINT PAUL, MINN., May 12, 1868.

"Post commanders in this department will assume control of all timber, wood, hay, and grazing upon the public lands adjacent to their respective posts, which are required for the public use thereat. Notice of the reservation of the timber, wood, &c., thus made will be thoroughly circulated in the manner best calculated to inform all who are or may become interested, in order to avoid all disputes of rights which might arise through ignorance.

"On all such reservations sutlers, traders, and civilians generally

will not be allowed to cut timber, wood, nor hay, nor be allowed to graze animals, until the wants of the garrison are supplied for the year.

"By command of Brevet Major-General Terry.

"O. D. GREENE,

"*Assistant-Adjutant-General.*"

The Court of Claims found that the post of Fort Ransom was situated on the public domain, surrounded by the public lands of the United States, and had, by an order from the head-quarters of the department of Dakota, dated May 18, 1869, which was approved by the Secretary of War and by the President Jan. 11, 1870, been declared a military reservation by that name, with the following boundaries: "The initial point is eight miles due south of the south-west angle of the fort; thence due east five miles; thence due north ten miles; thence due west ten miles; thence due south ten miles; thence due east five miles to the initial point."

That, prior to June 1, 1869, but near that time, the claimant commenced cutting wood on said reservation, at a point about a mile and a half from the fort, and had cut about forty cords, when he was ordered by the post commander to desist, and remove beyond the lines of the reservation. He then removed to a point within them, about four miles from the fort, and there cut three hundred and ten cords, when the post commander ordered him to stop cutting at that place, move off the reservation, and not to cut any wood within the lines thereof, but to cut wherever he pleased outside of them. The contractor then and there claimed the right, under his contract, to cut on the reservation; which claim the post commander refused to recognize. Thereupon, he cut the remaining six hundred and fifty cords required to be furnished by him at a point about seven miles from the fort, and from half a mile to a mile beyond the lines of the reservation.

That, in September, 1869, the claimant commenced hauling to the fort the wood which he had cut on the reservation at a point four miles from the fort, when the post commander stopped the work, and would not permit him to haul the wood, because it had been cut within the lines of the reservation, in disobedience of positive orders.

The claimant appealed to General Hancock, who overruled the post commander, decided that the contractor had a right to cut wood on the reservation, and to haul what had been so cut. By reason of the order of the post commander, nine teams of the claimant remained idle thirteen days, to his expense of $468; but it does not appear that he might not have employed them during that time in hauling the wood cut off the reservation, which he was not prohibited from moving.

That there was sufficient wood on the reservation for the known wants of the post; and the claimant could have obtained, either at or near the place where he cut the first forty cords, or at the place where he cut the three hundred and ten cords, the whole quantity required by the contract, had he not been interfered with by the orders of the post commander.

That, by reason of said orders, and by being compelled thereby to cut the remaining quantity of wood at greater distances from the fort, he was subjected to an additional expense of $2,132, in hauling the same to the place of delivery.

That it does not appear how much more expense, if any, the claimant was subjected to by reason of cutting the six hundred and fifty cords outside of the reservation, over and above what he would have incurred had he been permitted to cut them within it, at the place where he cut the three hundred and ten cords, and from which he was ordered away by the post commander.

That the claimant has been paid for one thousand and three cords of wood, delivered under the contract, the money therefor having been paid at different times, and a receipt therefor given in full for the quantity delivered.

On the foregoing facts, the court concluded, as a matter of law, that the claimant was not entitled to recover, and it dismissed his petition. He thereupon appealed to this court.

Mr. John B. Sanborn for the appellant.

The Solicitor-General, contra.

MR. JUSTICE CLIFFORD delivered the opinion of the court.

Post commanders in the military department where the present controversy arose were ordered to assume control of all timber, wood, hay, and grazing upon the public lands adjacent

to their respective posts, to the extent that the same were there required for the public use.

Supplies for the post were usually obtained by contract; and it appears that a contract was made between the petitioner and the quartermaster of the department, by which the former agreed to deliver and pile, in the wood-yard of the post, one thousand cords, more or less, of good, sound, merchantable oak-wood, to be delivered at the times specified, subject to such inspection as the quartermaster should deem necessary. Superadded to that is also the stipulation that no trader, sutler, contractor, or civilian will be allowed to cut timber about the post; and it appears that the post referred to is situated on the public domain, and that it was surrounded by the public lands.

Before the work was commenced, the contractor executed a power of attorney to the person for whose use the suit is brought; and it appears that the attorney did all the work under the contract as agent for and in the name of the contractor.

Pursuant to the contract, due deliveries were made by the attorney, to the amount of one thousand and three cords of wood; for which he was paid at different times, he receipting for the same, as attorney-in-fact of the contractor, in full for the quantity delivered. Payment in full for all that was delivered is established by the findings; but the petitioner insists that the United States broke the contract, by not allowing the attorney to cut the wood within the defined limits of the post; that he was refused that privilege; and that he was compelled to cut it at a greater distance from the place of delivery, at an expense of $2,132 beyond what it would have cost if he had been allowed to cut it within the military reservation, as he had a right to do under the contract, for which he claims compensation: and he also alleges that the United States obstructed the delivery of the wood, so as to cause him an additional expense of $468, which he also claims to recover.

Hearing was had; and the Court of Claims dismissed the petition, and the claimant appealed to this court.

Throughout, the attorney or agent of the contractor claimed the right to cut the wood within the military reservation, evidence of which is seen in the fact that he commenced cutting

about a mile and a half from the fort, where he cut forty cords before he was ordered by the post commander to desist, and to remove beyond the lines of the reservation. Whatever he may have claimed, he obeyed the order, and removed to another point, four miles from the fort, though still within the reservation; and there he cut three hundred and ten cords of the wood, when the commander of the post ordered him to stop cutting at that place, and to move outside of the reservation. Responsive to that order, he set up the claim that he had a right, under the contract, to cut the wood within the reservation; but the post commander refused to recognize any such right, and denied the claim.

Opposite views were evidently maintained by the parties, but the claimant yielded, and cut the balance of the wood required, to wit, six hundred and fifty cords, at a point half a mile or a mile beyond the limits of the reservation, and about seven miles from the fort.

Neither party attempted to rescind the contract; nor did the agent of the contractor cease to act under it, as he completed the cutting of the wood, and subsequently delivered it at the place designated in the contract, and collected the amount due to him at the contract price. Quantity, price, and place of delivery are all fixed in the contract; but nothing is said about the place where the wood is to be cut, except what may be properly inferred from the provision that no traders, sutlers, contractors, civilians, or others shall be allowed to cut timber about the post until all required by the party of the second part, to wit, the United States, for the purposes herein specified, shall have been secured; and that it shall be the duty of the post commander to enforce the stipulation as made and provided.

Beyond all question, the post commander denied the right of the attorney, under the contract, to cut the wood within the lines designating the military reservation; and it is equally clear that the agent of the claimant finally acquiesced in the views of the post commander, so far as respects the cutting of the wood.

Damages are claimed by the petitioner because he was not allowed to cut the wood within the military reservation; but it is clear that the claim cannot be supported, for several reasons,

either of which is sufficient to show that the judgment of the court below is correct: 1. Because the terms of the contract do not give the contractor the right which he claims. 2. Because the contract, when properly construed, prohibits the contractor from cutting wood within the reservation. 3. Because the contractor having acquiesced in the order of the post commander, and cut the wood outside of the reservation, and having since hauled and delivered the wood, and received his pay in full for the same under the contract, it is too late to prefer such a claim against the United States.

Controversy respecting the cutting of the wood ceased when the cutting was completed; but when the claimant commenced hauling the wood cut within the reservation, four miles from the fort, the post commander stopped the work, and would not permit him to haul the wood, because it had been cut within those lines in violation of positive orders. To that decision the claimant objected, and appealed to the commanding general, who overruled the order of the post commander, and decided that the contractor had a right to cut wood within the reservation, and to haul that which had been so cut. What the contractor then wanted was not the privilege of cutting wood within the reservation, but the right to haul that which he had previously cut within those lines in violation of the post commander's orders; and his appeal having been sustained, he was allowed to haul the wood, as he claimed the right to do. Having previously cut the wood, he wanted to haul it to the place of delivery, and he was permitted to do what he desired.

Suppose the decision of that high officer is correct, which is not admitted, it is clear that it cannot benefit the claimant, so far as respects the cutting of the wood, as it was all cut before the appeal to that officer was taken; and there is no pretence that the claimant ever afterwards attempted to cut any wood within the lines of the reservation, or that any request of his for such permission was ever after that refused.

Viewed in the light of these suggestions, it is clear that the petitioner is not entitled to recover any thing for the alleged extra expense of hauling the wood to the place of delivery, in consequence of the refusal of the post commander to allow him to cut it within the lines of the military reservation.

Even suppose that it is so, still it is insisted by the petitioner, that, inasmuch as the order of the post commander stopping the work of hauling the wood cut within the reservation was overruled by the commanding general, he, the appellant, is entitled to recover for the damage which he suffered by his teams remaining idle for thirteen days; but the court is not able to sustain that proposition, as it appears that he delivered the wood under the contract, collected and received the contract price for the same, and gave receipts in full for the same as a transaction completed in pursuance of the written contract set forth in the petition. Competent evidence of such acts is sufficient to prove an accord and satisfaction, and they show that there is no error in the record.

Judgment affirmed.

UNITED STATES v. SIMMONS.

1. An indictment under sect. 3266 of the Revised Statutes, charging the defendant with causing or procuring some other person to use a still, boiler, or other vessel, for the purpose of distilling, within the intent and meaning of the internal revenue laws of the United States, is bad, unless it states the name of such other person, or avers that the same is unknown.
2. An averment that such use was "in a certain building and on certain premises where vinegar was manufactured and produced" is not sufficient, as it does not state that vinegar was manufactured or produced there at the time the still and other vessels were used for the purpose of distilling.
3. It is not necessary to aver that the spirits distilled were alcoholic. The allegation that the vessels were used "for the purpose of distilling, within the intent and meaning of the internal revenue laws of the United States," sufficiently advises the accused of the nature of the offence charged.
4. The averment, that the defendant caused and procured the stills and other vessels to be used, implies, with sufficient certainty, that they were in fact used; and the nature of the means whereby their unlawful use was procured is matter of evidence to establish the imputed intent, and not of allegation in the indictment.
5. In an indictment under sect. 3281 of the Revised Statutes, charging that the defendant knowingly and unlawfully engaged in and carried on the business of a distiller, within the meaning of the internal revenue laws of the United States, with the intent to defraud the United States of the tax on spirits distilled by him, it is not necessary to state the particular means by which the fraud was effected. The intent being charged, the means are matters of evidence for the consideration of the jury

CERTIFICATE of division between the judges of the Circuit Court of the United States for the Eastern District of New York.

Simmons was indicted in the Circuit Court of the United States for the Eastern District of New York for violating sects. 3258, 3259, 3266, and 3281 of the Revised Statutes of the United States. The indictment contained four counts, the second of which was drawn under sect. 3266, and the fourth under sect. 3281. It is as to the sufficiency of these counts that the case comes here on certificate of division in opinion.

The facts are fully stated in the opinion of the court.

The Solicitor-General, for the United States, cited *United States* v. *Mills*, 7 Pet. 138; *United States* v. *Cook*, 17 Wall. 168; *United States* v. *Cruikshank et al.*, 92 U. S. 542.

Mr. Benjamin F. Tracy, for the defendant, cited *Lipe* v. *Becker*, 1 Den. (N. Y.) 568; *United States* v. *Clark*, 1 Gall. 497; Whart. Crim. Law, 285, 294, 300, 304, 366, 369, 372, 382, 2705; 1 Archb. Crim. Pr. & Pl. 86, note 2; id. 88; *United States* v. *Mills*, 7 Pet. 138; *People* v. *Wilbur*, 4 Park (N. Y.), Cr. 19, *Ewright* v. *People*, 21 How. (N. Y.) Pr. 383; *People* v. *Allen*, 5 Den. (N. Y.) 76; 1 Hale, P. C. 517, 526, 535; *United States* v. *Pond*, 2 Curt. 265; 1 Bishop, Crim. Proc. 141, 372; *United States* v. *Bentilini*, 15 Int. Rev. Rec. 32; *United States* v. *Howard*, 1 Sawyer, 507; *United States* v. *Staats*, 8 How. 41; *United States* v. *Reed*, 1 Low. 232; *United States* v. *Cruikshank et al.*, 92 U. S. 542; *People* v. *Gaige*, Green, Cr. L. R. 524; *United States* v. *Watkins*, 3 Cranch C. C. 441; *People* v. *Gates*, 13 Wend. (N. Y.) 311; *United States* v. *Thomas*, 4 Ben. 370; *State* v. *Jackson*, 39 Conn. 299; *United States* v. *Claflin*, 13 Blatchf. 178; *The Emily*, 9 Wheat. 381; *United States* v. *Gooding*, 12 id. 460; *Fillinger* v. *The People*, 15 Abb. (N. Y.) Pr. 128; *United States* v. *Fox*, 1 Low. 199.

MR. JUSTICE HARLAN delivered the opinion of the court.

Upon an indictment, charging violations of certain provisions of the Revised Statutes of the United States, relating to distilled spirits, Simmons was found guilty as charged in each count, and moved in arrest of judgment. The first and third counts were held to be bad, and the case is here upon a state-

ment of facts and a certificate of division in opinion upon several questions involving the sufficiency of the second and fourth counts.

The second count, pursuing the words of sect. 3266 of the Revised Statutes, charges that the defendant "did knowingly and unlawfully cause and procure to be used a still, boiler, and other vessel, for the purpose of distilling, within the intent and meaning of the internal revenue laws of the United States, in a certain building and on certain premises where vinegar was manufactured and produced, against the peace of the United States and their dignity, and against the form of the statute of the said United States in such case made and provided."

Under this count we are asked the following questions: First, whether it is sufficient, in an indictment drawn under that portion of the section which prohibits the use of a still, boiler, or other vessel, for the purpose of distilling, in any building or on premises where vinegar is manufactured or produced, to charge the offence in the words of the statute. Second, whether the omission of an averment that the distilling there referred to was of alcoholic spirits is a valid objection to the count.

The first question is answered in the negative.

Where the offence is purely statutory, having no relation to the common law, it is, "as a general rule, sufficient in the indictment to charge the defendant with acts coming fully within the statutory description, in the substantial words of the statute, without any further expansion of the matter." 1 Bishop, Crim. Proc., sect. 611, and authorities there cited. But to this general rule there is the qualification, fundamental in the law of criminal procedure, that the accused must be apprised by the indictment, with reasonable certainty, of the nature of the accusation against him, to the end that he may prepare his defence, and plead the judgment as a bar to any subsequent prosecution for the same offence. An indictment not so framed is defective, although it may follow the language of the statute.

Tested by these rules, the second count is insufficient. Since the defendant was not charged with using the still, boiler, and other vessels himself, but only with causing and procuring some one else to use them, the name of that person should have been given. It was neither impracticable nor unreasonably

difficult to have done so. If the name of such person was unknown to the grand jurors, that fact should have been stated in the indictment.

Nor does it sufficiently appear that vinegar was manufactured or produced in the building and on the premises referred to at the time the still and other vessels were used for the purpose of distilling. It is consistent with the averments that the vinegar had been manufactured or produced long prior to the date when the alleged distilling occurred. The two facts must coexist, in order to constitute the offence described in the statute.

In reference to the second question, we do not think it essential to aver in terms that the spirits distilled were alcoholic. In view of the statutory definition of distilling, the allegation that the vessels were used "for the purpose of distilling, within the intent and meaning of the internal revenue laws of the United States," was distinct and broad enough to advise the accused of the nature of the offence charged.

Counsel for the accused contend that the indictment does not show that the stills and other vessels were used for distilling. This objection cannot be sustained. The averment, that the defendant caused and procured them to be used, implies, with sufficient certainty, that they were in fact used. *United States* v. *Mills*, 7 Pet. 138.

Nor was it necessary, as argued by counsel for the accused, to set forth the special means employed to effect the alleged unlawful procurement. It is laid down as a general rule, that "in an indictment for soliciting or inciting to the commission of a crime, or for aiding or assisting in the commission of it, it is not necessary to state the particulars of the incitement or solicitation, or of the aid or assistance." 2 Wharton, sect. 1281; *United States* v. *Gooding*, 12 Wheat. 460. The nature of the means whereby the unlawful use of the still and other vessels was procured is matter of evidence to establish the imputed intent, and not of allegation in the indictment.

The fourth count is based upon sect. 3281 of the Revised Statutes, and charges that the defendant "did knowingly and unlawfully engage in and carry on the business of a distiller, within the intent and meaning of the internal revenue laws of

the United States, with the intent to defraud the United States of the tax on the spirits distilled by him, against the peace," &c.

This count seems to us sufficient to authorize judgment thereon. It was not necessary to state in the indictment the particular means by which the United States was to be defrauded of the tax. The defendant is entitled to a formal and substantial statement of the grounds upon which he is questioned, but not to such strictness in averment as might defeat the ends of justice. The intent to defraud the United States is of the very essence of the offence; and its existence in connection with the business of distilling being distinctly charged, must be established by satisfactory evidence. Such intent may, however, be manifested by so many acts upon the part of the accused, covering such a long period of time, as to render it difficult, if not wholly impracticable, to aver, with any degree of certainty, all the essential facts from which it may be fairly inferred.

"The means of effecting the criminal intent," says Mr. Wharton, "or the circumstances evincive of the design with which the act was done, are considered to be matters of evidence to go to the jury to demonstrate the intent, and not necessary to be incorporated in an indictment." 1 Wharton, sect. 292; *United States* v. *Gooding*, *supra*. To the same effect is the opinion of Mr. Justice Miller in the case of *United States* v. *Ulrici*, 3 Dill. 585.

But it is contended that the fourth count contains no averment of an unlawful act, but only of an intent to defraud the United States of the tax on spirits; and that it is not competent for Congress to punish a mere intent, however fraudulent, unaccompanied by an unlawful act. We do not think the indictment justly liable to this objection.

The internal revenue laws define the business of a distiller. Congress has the constitutional power to prescribe, as it has done, rules and regulations, in conformity to which that business may be lawfully carried on. But the citizen may not engage in or carry on such business with the intent to defraud the government of the tax on spirits distilled by him. If he does, he thereby commits the offence charged in the count under consideration, and is liable to the punishment prescribed by

statute. But such punishment is not inflicted merely or solely because of the intent to defraud. It is the act of engaging in the distillation of spirits, combined with that intent, which constitutes the offence. A question somewhat analogous arose in *The Emily*, 9 Wheat. 381. That was an information, founded upon the statutes prohibiting the slave-trade. Under those statutes, a vessel fitted out by any citizen or resident of the United States, for the purpose of carrying on any trade or traffic in slaves, contrary to the provisions of the statutes, &c., was subject to forfeiture. This court said: "The object in view, by the section of the law under consideration, was to prevent the preparation of vessels in our own ports which were intended for the slave-trade. Hence is connected with this preparation, whether it consists in building, fitting, equipping, or loading, the purpose for which the act is done. The law looks at the intention, and furnishes authority to take from the offender the means designed for the preparation of the mischief. This is not punishing the intention merely; it is the preparation of the vessel *and* the purpose for which she is to be employed that constitutes the offence, and draws after it the penalty of forfeiture. . . . The intention or purpose for which the vessel is fitting must be made out, so as to leave no reasonable doubt as to the object. This is a matter of proof, and, generally speaking, to be collected from the kind of preparation that has been made." In the subsequent case of *United States* v *Gooding*, *supra*, which was a prosecution for being engaged in the slave-trade contrary to the prohibitions of the act of 1818, the court said that the statute imputed no guilt to any particulars of the equipment of the vessel, but to the act of fitting out the vessel, with the illegal intent to engage in the prohibited traffic; that it was "the act, combined with the intent, and not either separately, which is punishable."

These decisions furnish rules applicable to the case under consideration. The statute does not prescribe a punishment simply for the intent to defraud the United States of the tax on spirits distilled, but for the act of engaging in and carrying on the business of a distiller with that intent. The act and the fraudulent intent together constitute the offence. That Congress, as a means of protecting the revenue and of

securing taxes rightfully due the government, may declare such an act, when accompanied by such an intent, to be a public offence, and prescribe a punishment therefor, we do not doubt.

The views here expressed furnish a sufficient answer to the questions propounded under the fourth count.

It will therefore be certified, as the opinion of this court, on the points of division, — 1. That the second count of the indictment is insufficient to authorize a judgment thereon. 2. That the fourth count is sufficient to authorize judgment to be pronounced thereon against the defendant; and it is

So ordered.

UNITED STATES v. VAN AUKEN.

Under the second section of the act of Congress approved July 17, 1862 (12 Stat. 592), which declares that "no private corporation, banking association, firm, or individual shall make, issue, circulate, or pay out any note, check, memorandum, token, or other obligation, for a less sum than one dollar, intended to circulate as money, or to be received or used in lieu of lawful money of the United States," A. was indicted for circulating obligations in the following form: —

"BANGOR, MICH., Aug. 15, 1874.

"The Bangor Furnace Company will pay the bearer, on demand, fifty cents, in goods, at their store, in Bangor, Mich.

(Signed) "A. B. HOUGH, *Pres.*
"CHAS. D. RHODER, *Treas.*"

The indictment charged that he intended them to circulate as money, and to be received and used in lieu of lawful money of the United States. *Held*, that, as the obligations were payable in goods and not in money, and the sum of fifty cents was named merely as the limit of the value of the goods demandable, the indictment was bad on demurrer.

CERTIFICATE of division in opinion between the judges of the Circuit Court of the United States for the Western District of Michigan.

The facts are stated in the opinion of the court.

The Attorney-General and *Mr. Assistant-Attorney-General Smith* for the United States.

Mr. George W. Lawton, contra.

MR. JUSTICE SWAYNE delivered the opinion of the court.

The act of Congress of July 17, 1862, sect. 2 (12 Stat. 592; Rev. Stat. 711, sect. 3583), declares that "no private corporation, banking association, firm, or individual shall make, issue, circulate, or pay out any note, check, memorandum, token, or other obligation, for a less sum than one dollar, intended to circulate as money, or to be received or used in lieu of lawful money of the United States," and denounces as a penalty for the offence fine or imprisonment, or both.

Van Auken was indicted under this act for circulating the "obligations" of the Bangor Furnace Company, a corporation created by and under the laws of the State of Michigan, which obligations are alleged to be *in hæc verba*: —

"BANGOR, MICH., Aug. 15, 1874.

"The Bangor Furnace Company will pay the bearer, on demand, fifty cents, in goods, at their store, in Bangor, Mich.

(Signed) "A. B. HOUGH, *Pres.*

"CHAS. D. RHODER, *Treas.*"

"Each of which said obligations was for a less sum than one dollar, and was intended by the said Aaron Van Auken to circulate as money, and to be received in lieu of lawful money of the United States, contrary," &c.

Van Auken demurred to the indictment. The opinions of the judges of the Circuit Court were divided and opposed upon two questions, which were thereupon certified to this court for final determination: —

1. Whether the obligation set forth in the indictment is within any valid statute of the United States.

2. Whether the statute under which the indictment was found is constitutional.

The solution of the first question depends upon the construction to be given to the words "for a less sum than one dollar." The object of the provision was obviously to secure, as far as possible, the field for the circulation of stamps, as provided in the preceding section, without competition from any quarter. This currency was superseded by the fractional notes authorized to be issued by the act of March 3, 1863, sect. 4 (12 Stat. 711). Small notes payable in any specific articles, if issued, could

have only a neighborhood circulation, and but a limited one there. It could be but little in the way of the stamps or small notes issued for the purposes of circulating change by the United States. Congress could, therefore, have had little or no motive to interfere with respect to the former. This must be borne in mind in the examination of the question in hand.

A dollar is the unit of our currency. It always means money, or what is regarded as money. In this case, the statute makes it the standard of measure with reference to the forbidden notes and obligations. If one of them be for a larger "sum than one dollar," it is not within the prohibition, and is not affected by the law. It is a fair, if not a necessary, inference, that the standard of measurement named was intended to be applied only to things *ejusdem generis;* in other words, to notes for money, and to nothing else.

It is certainly inapplicable to any thing not measurable by the pecuniary standard. It could not be applied where the measurement was to be, *ex gratia*, by the pound, the gallon, the yard, or any other standard than money. This view is supported by the statutory requirement that the forbidden thing must be "intended to circulate as money, or to be received or used in lieu of the lawful money of the United States." One of the lexical definitions of the word "sum," and the sense in which it is most commonly used, is "money." "Sum. (2.) A quantity of money or currency; any amount indefinitely, as a sum of money, a small sum, or a large sum." Webster's Dic. "For a less sum than one dollar" means exactly the same thing as for a less sum of money than one dollar. In the former case there is an ellipsis. In the latter, it is supplied. The implication where the omission occurs is as clear and effectual as the expression where the latter is added. The grammatical construction and the obvious meaning are the same. The statute makes the offence to consist of two ingredients: 1. The token or obligation must be for a less sum than a dollar. 2. It must be intended to circulate as money, or in lieu of the money of the United States. Here the note is for "goods," to be paid at the store of the Furnace Company. It is not payable in money, but in goods, and in goods only. No money could be demanded upon it. It is not solvable in that medium. *Wat-*

son v. *McNairy*, 1 Bibb, 356. The sum of "fifty cents" is named, but merely as the limit of the value in goods demandable and to be paid upon the presentment of the note. Its mention was for no other purpose, and has no other effect. In the view of the law, the note is as if it called for so many pounds, yards, or quarts of a specific article. The limit of value, there being none other, gave the holder a range of choice as to the articles to be received in payment, limited only by the contents of the store.

But it is said the indictment avers that the note was intended to circulate as money, and that the demurrer admits the truth of the averment.

To this there are two answers: —

1. The demurrer admits only what is well pleaded.

2. The offence, as we have shown, consists of two elements: the thing circulated, and the intent of the party circulating it.

The demurrer, at most, admits only the latter. As to the former, the judgment of the court is left unfettered, just as if the question before us had been raised by a motion to quash, instead of a demurrer.

The first question certified must be answered in the negative. The second one it is, therefore, unnecessary to consider.

MR. JUSTICE MILLER dissented.

EX PARTE SCHOLLENBERGER.

A foreign insurance company was doing business in Pennsylvania under a license granted pursuant to a statute, which, among other things, provided that the company should file a written stipulation, agreeing that process issued in any suit brought in any court of that Commonwealth having jurisdiction of the subject-matter, and served upon the agent specified by the company to receive service of process for it, should have the same effect as if personally served upon the company within the State. Suit was brought in the Circuit Court of the United States for the Eastern District of Pennsylvania by a citizen of that State against the company, and process served, in accordance with the State law, upon its agent so specified, who resided within the district. The service of the process was quashed, because the company was not an inhabitant of or found within the district. *Held*, 1. That the Circuit Court has jurisdiction of the suit, and should proceed to hear and determine it. 2. That said court is a court of the Commonwealth, within the intent of the statute.

PETITION for a *mandamus* to the judges of the Circuit Court of the United States for the Eastern District of Pennsylvania.

Schollenberger, a citizen of Pennsylvania, brought sundry suits in said Circuit Court against certain foreign insurance companies, upon policies which they had severally issued upon his property situate in that State and within the jurisdiction of the court.

Each company, before the issue of its policy, had accepted the provisions of the statute of the State, and, in compliance therewith, appointed its agent residing there, on whom process of law against it could be served. So much of the statute as bears on the question here involved is set out in the opinion of this court.

The service of the writs, which were sued out by Schollenberger, and executed, in accordance with the State law, on the agents of the several companies by them respectively specified for the purpose, and residing within the jurisdiction of the court, was quashed by the Circuit Court. On his petition, setting forth the foregoing facts, a rule was awarded upon the judges of that court to show cause why a writ of *mandamus* should not be issued out of the office of this court, commanding them to hear and determine the suits so brought in the said Circuit Court, and also to strike from the record certain orders dated the thirteenth day of April, 1878, whereby the service of the said writs was quashed, and thereupon to make such disposition of the suits as ought to have been made, had the said orders not been entered.

The judges, in their return, answered, that the facts were truly stated in the petition; that the respondents declined to hear and determine the said suits, because, in their opinion, the said Circuit Court had no competent jurisdiction thereof, the defendants not having appeared therein, or in any wise submitted to the jurisdiction of the court, and not having been at the commencement of the respective suits, or at any time, inhabitants of or found in the said district, within the meaning of the act of Congress of March 3, 1875, re-enacting a like provision of the eleventh section of the act of Sept. 24, 1789; that the question under this enactment being one of jurisdic-

tion, and not of mere procedure, the statute of Pennsylvania, mentioned in the said petition, was, in the opinion of the respondents, inapplicable. The service of the process in the said suits was, therefore, set aside, as unauthorized.

Mr. R. C. McMurtrie and *Mr. A. Sydney Biddle* for Schollenberger.

1. The jurisdiction of the Circuit Court over the parties is indisputable. Schollenberger was a citizen of Pennsylvania. The corporations were created by other States, and by entering their appearance to the actions would have become subject to that jurisdiction, which would not be the case if the requisite citizenship of the parties to the record did not exist. *Jones* v. *Anderson*, 10 Wall. 327.

2. *Mandamus* is the appropriate remedy.

That writ goes to the archbishop, if exercising judicial functions, *Reg.* v. *Canterbury*, 11 Q. B. 483; to a court declining to exercise judicial functions imposed by law, *Reg.* v. *West R. Justices*, 1 New Sess. Cas. 247; to compel making a warrant of distress, *St. Lukes* v. *Middlesex*, 1 Wils. 133; on a refusal to act because of a statute which did not apply to the case, *Reg.* v. *Bingham*, 4 Q. B. 877; on a refusal to hear an appeal for reasons which were not legal ones, *Reg.* v. *Middlesex*, 2 B. C. R. 82; on a refusal because of an erroneous opinion as to sufficiency of grounds, *Reg.* v. *Carnarvon*, 1 G. & D. 423; or on erroneous point of practice, *Reg.* v. *Kistevan*, 3 Q. B. 810; on a refusal of the Circuit Court to take jurisdiction of a cause removed to it from a State court, *Railroad Company* v. *Wiswall*, 23 Wall. 567; on a refusal to grant an appeal to which a party is entitled, *Ex parte Cutting*, 94 U. S. 14; *Ex parte Jordan*, id. 248.

3. The State had a right to impose the prescribed conditions to the transaction of the business of insurance within her territory by the companies. *Doyle* v. *Insurance Company*, 94 U. S. 535; *Lafayette Insurance Co.* v. *French*, 18 How. 404; *Railroad Company* v. *Harris*, 12 Wall. 65. The latter having accepted them, and subsequently issued the policies which are the subject-matter of the suits in question, were bound to specify, and did specify, agents residing within the State upon whom process could be served. Service in the mode prescribed by the State

law, upon such agents actually within the jurisdiction of the court, was, therefore, good under the act of Congress (17 Stat. 197), and had the same effect as if personally made within the eastern district of Pennsylvania upon the respective com panies.

4. Each of the companies had, therefore, a *habitat* for the purposes of jurisdiction within that district, and was found there, within the meaning of the act of Congress of March 3, 1875 (18 Stat. 470). *Knott* v. *Southern Life Insurance Co.*, 2 Woods, 479; *Railroad Company* v. *Harris*, *supra*.

Mr. Richard P. White, *contra*.

1. *Mandamus* is not the proper remedy.

The question raised on the motion below to quash the service of the writs was one of jurisdiction, and the judges in passing upon it were obviously acting in a judicial, and not in a ministerial, capacity. The proceeding may be reviewed on error; but it is not the office of a *mandamus* to compel an inferior court to reverse a decision made in the exercise of its legitimate jurisdiction. *Ex parte Flippin*, 94 U. S. 348.

2. The service of the writs was properly quashed. Each of the defendants was a foreign corporation, not having an existence, nor its officers any official character, outside the limits of the State which created it. *Bank of Augusta* v. *Earle*, 3 Pet. 519; *Ohio & Mississippi Railroad Co.* v. *Wheeler*, 1 Black, 286. It could not, therefore, be found within the district Although the pretended service was according to the State law, the act of Congress requiring conformity of process and procedure did not make it good, if a court of the United States had no power to issue the writ, or proceed in the cause. That power cannot be derived from State legislation, *Toland* v. *Sprague*, 12 Pet. 300; *Levy* v. *Fitzpatrick*, 15 id. 167; *Insurance Company* v. *Morse*, 20 Wall. 445; and Congress, so far from conferring it, has prohibited a suit in the Circuit Court against a person not an inhabitant of nor found within the district.

The writs, for the service of which the statute of Pennsylvania provides, are, by an express limitation, confined to those sued out in actions brought in the tribunals of that State.

If, however, each company, by its acceptance of that statute, was constituted, *pro tanto*, a Pennsylvania corporation, then the Circuit Court had no jurisdiction, as both parties were, for the purposes of the suit, citizens of the same State. Where a corporation exists in two States, it cannot be sued in a Federal court by a citizen of either of them. *Ohio & Mississippi Railroad Co.* v. *Wheeler*, *supra*.

The decision of the Circuit Court is sustained by *Pomeroy* v. *New York & New Haven Railroad Co.*, 4 Blatchf. 120; *Day* v. *Newark India-rubber Manufacturing Co.*, id. 628; *Southern Atlantic Telegraph Co.* v. *The New Orleans, Mobile, & Texas Railroad Co.*, 2 Cent. Law Jour. 88; and *Stilwell* v. *The Empire Fire Insurance Co.*, 4 id. 88.

Railroad Company v. *Harris*, upon which great reliance is placed on the other side, was a suit brought in the District of Columbia against a foreign corporation doing business there, under an act which provided that service might be made upon the agent. Congress may undoubtedly regulate the mode of serving process in the courts of that District, and prescribe the conditions upon which foreign corporations may there transact business. Its power in that regard is the same as that of the several States within their respective limits, and no one questions that Pennsylvania can determine the manner in which writs issued by her own courts may be executed. That case differs essentially from this. Congress, by an act solely applicable to a specific territory, extended the jurisdiction of its courts to suits against a foreign corporation doing business there, when process should be served in the mode prescribed; while by the act of March 3, 1875, which governs here, it withholds from the Circuit Court jurisdiction over a defendant not an inhabitant of or found within the proper district.

The opinion in that case must, therefore, be understood with reference to the facts. Although not relating to the effect of State legislation upon the service of Federal writs, it evidently misled the learned judge of the fifth circuit in *Knott* v. *Southern Life Insurance Co.* It should also be borne in mind that the statute which he had under consideration differs from that of Pennsylvania, in requiring the foreign company

doing business in Alabama to consent that service upon its agents there shall be sufficient, without restriction as to the courts out of which the writ may issue.

MR. CHIEF JUSTICE WAITE delivered the opinion of the court.

This is a petition for a writ of *mandamus*, requiring the judges of the Circuit Court of the United States for the Eastern District of Pennsylvania to hear and determine certain suits brought in that court in favor of the relators against a number of insurance companies incorporated by the laws of other States, but doing business in that State under a license granted pursuant to a statute regulating that subject. The Circuit Court declines to entertain jurisdiction of the causes, for the reason, as is alleged, that the defendant companies were not "at the commencement of the respective suits, or at any time, inhabitants of or found in the said district." This presents the only question in the case, as it is conceded that the citizenship of the parties is such as to give the court jurisdiction, if the several defendants can be sued in the district without their consent.

A statute of Pennsylvania provides that "no insurance company not of this State, nor its agents, shall do business in this State until he has filed with the insurance commissioner of this State a written stipulation, duly authenticated by the company, agreeing that any legal process affecting the company served on the insurance commissioner, or the party designated by him, or the agent specified by said company to receive service of process for the said company, shall have the same effect as if served personally on the company within this State; and, if such company should cease to maintain such agent in this State, so designated, such process may thereafter be served on the insurance commissioner; but, so long as any liability of the stipulating company to any resident of this State continues, such stipulation cannot be revoked or modified, except that a new one may be substituted, so as to require or dispense with the service at the office of said company within this State, and that such service of process according to this stipulation shall be sufficient personal service on the company. The term 'pro-

cess' includes any writ of summons, subpœna, or order whereby any action, suit, or proceedings shall be commenced, or which shall be issued in or upon any action, suit, or proceedings brought in any court of this Commonwealth having jurisdiction of the subject-matter." Laws of Penn., 1873, p. 27, sect. 13.

The return to the rule to show cause admits that all the defendant companies were doing business in the State under this statute, and that their designated agents were duly served with process in each of the suits. For the purposes of this hearing, the fact of due service upon the agents must be considered as established. If in reality it is not so, the court below will not be precluded by any thing in this proceeding from inquiring into the truth, and acting upon the facts as they are found to exist.

The act of 1875, determining the jurisdiction of the circuit courts (18 Stat. 470), and which in this particular is substantially a re-enactment of the act of 1789 (1 Stat. 79, sect. 11), provides that "no civil suit shall be brought before either of said courts against any person by any original process or proceeding in any other district than that whereof he is an inhabitant, or in which he shall be found at the time of serving such process or commencing such proceedings, except," &c.

It is unnecessary to inquire whether these several companies were inhabitants of the district. The requirements of the law, for all the purposes of this case, are satisfied if they were found there at the time of the commencement of the suits; and that question, we think, was settled in *Railroad Company* v. *Harris*, 12 Wall. 65. In that case, it appears that, when the suit was commenced, the statutes defining the jurisdiction of the courts of the District of Columbia provided that "no action or suit shall be brought . . . by any original process against any person who shall not be an inhabitant of or found within the District at the time of serving the writ." 2 Stat. 106, sect. 6. Afterwards, in 1867, the law was changed in respect to foreign corporations doing business in the District, and service allowed upon the agent (14 Stat. 404, sect. 11); but when the suit was begun and the process served the old law was in force. The Baltimore and Ohio Railroad Company, a Maryland corporation, was authorized by Congress to construct and extend its

railroad into the District of Columbia. Harris, having been injured while travelling as a passenger upon the railroad outside of the District, sued the company in the Supreme Court of the District, and caused the writ to be served upon the president of the company within the District. The company objected to the jurisdiction of the court, and insisted that it was neither an inhabitant of nor found within the District. In ruling upon this objection, we held that, although the company was a foreign corporation, it was suable in the District, because it had in effect consented to be sued there, in consideration of its being permitted by Congress to exercise therein its corporate powers and privileges. The language of the court, speaking through Mr. Justice Swayne, is: "It (a corporation) cannot migrate, but may exercise its authority in a foreign territory upon such conditions as may be prescribed by the law of the place. One of these conditions may be that it shall consent to be sued there. If it do business there, it will be presumed to have assented, and will be bound accordingly." Then, after an examination of the statute granting the right to extend the road, it was said (p. 84): "We entertain no doubt that it made the company liable to suit where this suit was brought, in all respects as if it had been an independent corporation of the same locality." This language was cited with approbation, and adopted as a correct exposition of the law by Mr. Justice Field, speaking for the court, in *Railway Company* v. *Whitton*, 13 Wall. 270.

Applying these principles to the present case, there cannot be any doubt, as it seems to us, of the jurisdiction of the Circuit Court over these defendant companies. They have in express terms, in consideration of a grant of the privilege of doing business within the State, agreed that they may be sued there; that is to say, that they may be found there for the purposes of the service of process issued "by any court of the Commonwealth having jurisdiction of the subject-matter." This was a condition imposed by the State upon the privilege granted, and it was not unreasonable. *Lafayette Insurance Co.* v. *French*, 18 How. 404. It was insisted in argument that the statute confines the right of suit to the courts of the State; but we cannot so construe it. There is nothing to manifest such an

intention; and, as the object of the legislature evidently was to relieve the citizens of Pennsylvania from the necessity of going outside of the State to seek judicial redress upon their contracts made with foreign insurance companies, it is but reasonable to suppose that they were entirely at liberty to select the court in the State having jurisdiction of the subject-matter, which, in their judgment, was the most convenient and desirable. As the company, if sued in a State court, could remove the cause to the Circuit Court, and thus compel a citizen of the State to submit to that jurisdiction, we see no reason why the citizen may not, if he desires it, bring the company into the same jurisdiction at the outset. While the Circuit Court may not be technically a court of the Commonwealth, it is a court within it; and that, as we think, is all the legislature intended to provide for.

States cannot by their legislation confer jurisdiction upon the courts of the United States, neither can consent of parties give jurisdiction when the facts do not; but both State legislation and consent of parties may bring about a state of facts which will authorize the courts of the United States to take cognizance of a case. *Ex parte McNeil*, 13 Wall. 236. Thus, if the parties to a suit, both plaintiff and defendant, are in fact citizens of the same State, an agreement upon the record that they are citizens of different States will not give jurisdiction. But if the two agree that one shall move into and become a citizen of another State, in order that jurisdiction may be given, and he actually does so in good faith, the court cannot refuse to entertain the suit. So, as in this case, if the legislature of a State requires a foreign corporation to consent to be "found" within its territory, for the purpose of the service of process in a suit, as a condition to doing business in the State, and the corporation does so consent, the fact that it is found gives the jurisdiction, notwithstanding the finding was procured by consent. The essential fact is the finding, beyond which the court will not ordinarily look.

A corporation cannot change its residence or its citizenship. It can have its legal home only at the place where it is located by or under the authority of its charter; but it may by its agents transact business anywhere, unless prohibited by its

charter or excluded by local laws. Under such circumstances, it seems clear that it may, for the purpose of securing business, consent to be "found" away from home, for the purposes of suit as to matters growing out of its transactions. The act of Congress prescribing the place where a person may be sued is not one affecting the general jurisdiction of the courts. It is rather in the nature of a personal exemption in favor of a defendant, and it is one which he may waive. If the citizenship of the parties is sufficient, a defendant may consent to be sued anywhere he pleases, and certainly jurisdiction will not be ousted because he has consented. Here, the defendant companies have provided that they can be found in a district other than that in which they reside, if a particular mode of proceeding is adopted, and they have been so found. In our opinion, therefore, the Circuit Court has jurisdiction of the causes, and should proceed to hear and decide them.

We are aware that the practice in the circuit courts generally has been to decline jurisdiction in this class of suits. Upon an examination of the reported cases in which this question has been decided, we find that in almost every instance the ruling was made upon the authority of the late Mr. Justice Nelson, in *Day* v. *The Newark India-rubber Manufacturing Co.*, 1 Blatchf. 628, and *Pomeroy* v. *The New York & New Haven Railroad Co.*, 4 id. 120. These cases were decided by that learned justice, the one in 1850 and the other in 1857, long before our decision in *Railroad Company* v. *Harris* (*supra*), which was not until 1870, and are, as we think, in conflict with the rule we there established. It may also be remarked, that Mr. Justice Nelson, as a member of this court, concurred in that decision.

Judge Woods, of the fifth circuit, has already decided in favor of the jurisdiction in *Knott* v. *The Southern Life Insurance Co.* (2 Woods, 479), and Judge Dillon, of the eighth circuit, declined to take it, only because he felt himself foreclosed by the rulings of other judges, and especially of Mr. Justice Nelson. *Stillwell* v. *The Empire Fire Insurance Co.*, 4 Cent. Law Jour. 463. *Writ of mandamus granted.*

WISCONSIN v. DULUTH.

Where Congress has, in the exercise of its lawful authority, inaugurated or adopted a system for the improvement of a harbor, and is, by appropriating the public moneys, carrying it out, this court has no authority to prescribe the manner in which the work shall be conducted, or to forbid its completion or to require the undoing of that which has been done.

ORIGINAL.

The facts are stated in the opinion of the court.

Mr. I. C. Sloan and *Mr. James B. Beck* for the complainant.

Mr. C. K. Davis, contra.

MR. JUSTICE MILLER delivered the opinion of the court.

This is a bill in chancery, filed in this court by the State of Wisconsin, by virtue of the constitutional provision which confers upon the court jurisdiction of suits between the States and between a State and citizens of other States. To the bill as originally brought the city of Duluth, as a corporation of the State of Minnesota, and, therefore, a citizen of that State, and the Northern Pacific Railroad Company, a corporation organized under an act of Congress, were made defendants. Whether the jurisdiction of the court could have been sustained in regard to the latter corporation, it is not necessary to inquire; for the plaintiff, before the final hearing, dismissed the bill as to the railroad company: and we are now, after answer, replication, and a large amount of evidence, to render our decree as between the State of Wisconsin and the city of Duluth.

This city is situated on the northern shore of Lake Superior, near its western extremity; and about seven or eight miles south-east of it, on the Wisconsin shore, is Superior City. A narrow strip of land, varying from three to eight hundred feet in width, projects itself from the shore at Duluth into the waters of the lake about seven miles, terminating just opposite Superior City, and opposite another point coming from the Wisconsin shore. The strip of land first mentioned is a part of the State of Minnesota, and is called Minnesota Point. West of Minnesota Point is a body of water lying parallel to it, and averaging a mile and a half or two miles in width, called Superior Bay, and still west of that a similar body, called St. Louis

Bay. Into this latter empties the St. Louis River, draining a large area of country west of the lake, and discharging the water thus collected into the lake.

St. Louis Bay and Superior Bay are spoken of as parts of St. Louis River, as enlargements of that stream; and testimony is taken to show that the water does not flow from the lake east of Minnesota Point into these bays, and other testimony to show that it does. Whether these bays are considered as parts of Lake Superior, or as mere expansions of the river, is in our view immaterial; for it is a fact not denied that there is a current due to the river through both these bays, which, in the natural condition of the points of land we have mentioned, discharged itself into the main body of the lake at the southern end of Minnesota Point; and that this point was the natural entrance and exit of vessels from the lake into the bays, and from the bays into the lake. And previous to the act of the city of Duluth, presently to be mentioned as the foundation of this suit, it was the only passage for vessels into and out of the bay. There was here in this bay a natural harbor where vessels could anchor in safety, and it was the only one on Lake Superior within fifty or sixty miles of its western limit. Here grew up Superior City, at which all vessels landed which came by the great lake system so far west. Outside of the bay and east of Minnesota Point the lake was rough, and there was no protection for vessels from the winds and waves.

The passage or channel at this narrow entrance, which by complainant is called the mouth of the St. Louis River, was never very deep, and the bar, if it may be so called, gave great trouble on this account. For several years prior to 1871, the United States had made appropriations to remedy this difficulty; and a plan had been adopted and money expended in the construction of piers on each side of the channel, which, by confining the flow of the water within narrow limits, would, by the process of scouring, keep the channel from filling up, and it was hoped would also deepen it.

By the spring of 1871, the city of Duluth, stimulated by the construction of the Northern Pacific Railroad westward from that city, which was its terminus on the lake, began to feel the need of a safe harbor of its own. A breakwater or pier built

into the lake was started by an appropriation by Congress, but was found to be unsatisfactory. The city of Duluth conceived and executed in a very short time the project of a canal across the narrow neck of Minnesota Point, near its connection with the main shore. By this means, vessels could enter Superior Bay, where it washed the shores of Duluth, as well as by the channel which let them into the same bay at Superior City. The railroad company and the city expended large sums of money to dredge out and make this harbor fit for the purposes of the large commerce which was expected to be brought there by the railroad. The canal across Minnesota Point was made about two hundred and fifty feet wide and from fifteen to eighteen feet deep; while the greatest depth at the mouth of the St. Louis River was ten and twelve feet.

The citizens of Superior City began to resist this action of the people of Duluth and the railroad company as soon as they comprehended the magnitude of the project. The contest has, from that time to the present, been urged before the State legislatures, before Congress, before the War Department (as having charge of appropriations to be spent in the improvement of navigation at these points), and in the courts, where there have been several suits before the one we are now about to decide.

The present suit was brought by State of Wisconsin, on the ground that the channel of the St. Louis River, as it flowed in a state of nature, was the common boundary between that State and the State of Minnesota, and that she has an interest in the continuance of the channel as an important highway for navigation and commerce in its natural and usual course. That the canal cut by Duluth across Minnesota Point, deeper than the natural outlet of the St. Louis River at its mouth, has diverted, and will continue to divert, the current of that river through Superior Bay into the lake by way of that canal. That the result of this is, that while the current cuts that canal deeper and gives an outlet for the water there at a lower level, it at the same time, by diverting this current from the old outlet, causes it to fill up, and thus destroys the usefulness of the river and bay as an aid of commerce, on which the State had a right to rely. The bill, after reciting the facts which we have already detailed, insists that the city of Duluth cannot, by any right of

her own nor by any authority conferred on her by the State of Minnesota, thus divert the waters of the stream — the St. Louis River — from their natural course, to the prejudice of the rights of the State of Wisconsin or of her citizens. It declares that this canal at Duluth does this in violation of law; and it prays of this court to enjoin Duluth from protecting or maintaining it, and by way of mandatory injunction to compel that city to fill up the canal and restore things in that regard to the condition of nature in which they were before the canal was made.

The answer, while admitting the construction of the canal, denies almost every other material allegation of the bill. It denies especially that the canal has the effect of changing the course of the current of the river, or does any injury to the southern entrance to Superior Bay or diminishes the flow of water at that point.

A large amount of testimony, professional and non-professional, is presented on that subject. The answer also sets up, as an affirmative defence to the relief sought by the bill, that the United States, by the legislative and executive departments of the government, have approved of the construction of the canal, have taken possession and control of the work, have appropriated and spent money on it, and adopted it as the best mode of making a safe and accessible harbor at the western end of the great system of lake navigation.

Many very interesting questions have been argued, and ably argued, by counsel, which we have not found it necessary to decide. The counsel for defence deny that the State of Wisconsin has any such legal interest in the flow of the waters in their natural course as authorizes her to maintain a suit for their diversion. It is argued that this court can take cognizance of no question which concerns alone the rights of a State in her political or sovereign character. That to sustain the suit she must have some proprietary interest which is affected by the defendant. This question has been raised and discussed in almost every case brought before us by a State, in virtue of the original jurisdiction of the court. We do not find it necessary to make any decision on the point as applicable to the case before us.

Nor shall we address ourselves to the consideration of the mass of conflicting evidence as to the effect of the canal on the flow of the waters of Superior Bay.

We will first consider the affirmative defence already mentioned; for, if that be found to be true in point of fact, it will preclude any such action by this court as the plaintiff has prayed for.

It is to be observed, as preliminary to an examination of the acts of the general government in the special matter before us, that the whole system of river and lake and harbor improvements, whether on the sea-coast or on the lakes or the great navigable rivers of the interior, has for years been mainly under the control of that government, and that, whenever it has taken charge of the matter, its right to an exclusive control has not been denied. The operations of the government in this regard have been conducted by the bureau of engineering, as part of the War Department, to which Congress has confided the execution of its wishes in all these matters. That department has mapped out in suitable geographical divisions the work thus imposed upon it, and placed these under the control of officers who are in charge of them. These are again subdivided, so that while the lake system, or, at all events, the western lake system, is in the charge of one general superintendent, the separate works which at different places are conducted under him have each another engineering officer, who has special charge of those works.

For many years past, Congress has been in the habit of passing an annual appropriation bill, called the river and harbor bill, devoted to works of this class exclusively; and in these bills it appropriates specific sums to specific works, either already commenced and unfinished, or for new works thereby authorized, or sums necessary for the safety and protection of works already in existence. The money thus appropriated is expended, as we have said, under the direction of the War Department. It cannot be necessary to say that when a public work of this character has been inaugurated or adopted by Congress, and its management placed under the control of its officers, there exists no right in any other branch of the government to forbid the work, or to prescribe the manner in which it shall be conducted

With these observations, we proceed to inquire what the general government has done in the matter before us. As we have already stated, it had for several years been at work under appropriations by Congress, prior to the construction of the canal at Duluth, in the effort to deepen the channel at the mouth of the St. Louis River, but, we may infer, with little success beyond preventing it from filling up. The rapid growth of the city of Duluth, consequent upon its being made the terminus of the railroad, had attracted attention to the necessity of harbor improvements at that point; and Congress had made appropriations for a breakwater, which had been partially constructed outside of Minnesota Point in the main water of the lake. But this had proved a failure; and it was seen that no safe harbor for the vast commerce which was expected to be created at that place by the North Pacific Railroad could be secured in that mode. The city of Duluth and the railroad company, impatient of relief from Congress, inaugurated, therefore, in 1871, the system of improving the inner harbor in the waters of Superior Bay, and effecting an entrance into that harbor by the canal across Minnesota Point. The canal was completed sufficiently for use in that year, and the dredging of the harbor commenced. The matter was in this condition when Congress, by the river and harbor bill approved March 3, 1873, appropriated, "for the purpose of dredging out the bay of Superior, from the natural entrance to the docks of Superior and Duluth, and preserving both entrances from the lake thereto, $100,000." The whole sheet of water, as we have said, lying west of Minnesota Point, from one to two miles wide, and extending from Duluth on the north shore to Superior City on the south, was Superior Bay. There was but one entrance into that bay from the lake until the canal was made. There were no docks at Duluth but those made by the railroad company and the city in the inner harbor at the upper end of that bay. We see, then, at once, that Congress, recognizing what had been done by private enterprise at Duluth, determined to place that harbor and that canal under the same protection and to provide for them in the same appropriation which covered the entrance and the harbor at Superior City. Hence, $100,000 was appropriated as one item, for both entrances and

for both improvements, to be administered by the same officers as their judgment might dictate. The following extract from the report of the officer in charge of the matter shows what was done under the appropriation: —

1. Completing the pier at the natural entrance to Superior Bay	$25,000
2. Dredging between the piers at the natural entrance	11,340
3. Dredging from natural entrance to docks at Superior City	12,000
4. Repairing pier at Duluth entrance	19,500
5. Dredging between piers at Duluth entrance and from the piers to the docks of Duluth	16,400

This dredging was in the inner harbor, and the breakwater was thenceforth abandoned as a government work. An estimate made by the engineer department for the next year's appropriations, required for the maintenance of the Superior City entrance, $10,000; for the Duluth entrance, $10,000; and for dredging the bay of Superior, $100,000: and the appropriation bill, among other items, had, for continuing the improvement of the entrance to the main harbor of Duluth, $10,000.

Of this appropriation, the engineer in charge says that some repairs to the piers (of the canal) were made, and 45,171½ cubic yards were dredged from the inside harbor.

By the act entitled "An Act making appropriations for the repair, preservation, and completion of certain public works in rivers and harbors, and for other purposes, approved March 3, 1875, there was 'appropriated, to be expended under the direction of the Secretary of War, for the repair, preservation, and completion of the public works hereinafter named; viz., For dredging the inside harbor of Duluth, $35,000.'"

In the report of the chief of engineers for the year 1875, it is further stated: —

"The appropriation of $35,000, made in the river and harbor bill, approved March 3, 1875, restricts the application of that sum to dredging the inside harbor, and during the present fiscal year it is proposed to continue the dredging on the anchorage ground.

"The north pier of the canal, which was not built by the United States, is in a very precarious state, owing to its being undermined.

The estimated cost of the present urgent repairs is $6,300; and as every year some repairs are necessary, an appropriation of $10,000 for this purpose is needed."

And in the act of Aug. 1, 1876, there is the following paragraph: —

"For the improvement of the harbor at Duluth, Minn., $15,000. Said appropriation is made upon the express condition that it shall be without prejudice to either party in the suit now pending between the State of Wisconsin, plaintiff, and the city of Duluth and the Northern Pacific Railroad, defendants."

The hostility of Superior City and of the State of Wisconsin could not avail to defeat the appropriation; but as this suit was then pending, the clause that it should be without prejudice to any one in the suit was inserted.

It was not needed. The Congress of the United States had themselves before this, adopted, recognized, and taken charge of this work. It had placed it on precisely the same ground, and provided for it in the same paragraph, and out of the same aggregate sum of money, that it did the work at the original entrance, as it is aptly called, at the mouth of the river. It had abandoned the breakwater as a failure, and as unnecessary, in consequence of this new and more useful improvement. The War Department had accepted the charge of the work, had expended the appropriations made, and had now for several years made the same regular estimates for this work that it did for all others under its control and management. And though the State of Wisconsin had brought her suit in this court to abate the work as a nuisance, and Congress was made aware of the fact, it still, in 1876, made the usual appropriation, and the War Department still had the work in charge; and the Congress cautiously said, this shall prejudice no one in the suit, but we shall go on notwithstanding, and continue this system of improvement.

We do not feel called upon to make an argument to prove that these statutes of the Congress of the United States, and these acts of the Executive Department in carrying those statutes into effect, constitute an adoption of the canal and harbor improvement started by the city of Duluth, and a taking

exclusive charge and control of it. That they amount to the declaration of the Federal government, that we here interpose and assert our power. We take upon ourselves the burden of this improvement, which properly belongs to us, and that hereafter this work for the public good is in our hands and subject to our control.

If the merest recital of these acts of Congress, and of the War Department under them, do not establish that proposition, we can have little hope of making it plain by elaborate argument.

Nor can there be any doubt that such action is within the constitutional power of Congress. It is a power which has been exercised ever since the government was organized under the Constitution. The only question ever raised has been how far and under what circumstances the exercise of the power is exclusive of its exercise by the States. And while this court has maintained, in many cases, the right of the States to authorize structures in and over the navigable waters of the States, which may either impede or improve their navigation, in the absence of any action of the general government in the same matter, the doctrine has been laid down with unvarying uniformity, that when Congress has, by any expression of its will, occupied the field, that action was conclusive of any right to the contrary asserted under State authority. The adjudged cases in this court on this point are numerous.

This subject was recently very fully considered in *South Carolina* v. *Georgia et al.*, 93 U. S. 4, and at this term in *Pound* v. *Turk*, 95 id. 459. The doctrine was settled, however, long before this. The following cases are fully in point: *Gibbons* v. *Ogden*, 9 Wheat. 1; *Wilson et al.* v. *The Blackbird Creek Marsh Co.*, 2 Pet. 245; *The Wheeling Bridge Case*, 18 How. 421; *Gilman* v. *Philadelphia*, 3 Wall. 713.

If, then, Congress, in the exercise of a lawful authority, has adopted and is carrying out a system of harbor improvements at Duluth, this court can have no lawful authority to forbid the work. If that body sees fit to provide a way by which the great commerce of the lakes and the countries west of them, even to Asia, shall be securely accommodated at the harbor of Duluth by this short canal of three or four hundred

feet, can this court decree that it must for ever pursue the old channel, by the natural outlet, over water too shallow for large vessels, unsafe for small ones, and by a longer and much more tedious route?

When Congress appropriates $10,000 to improve, protect, and secure this canal, this court can have no power to require it to be filled up and obstructed. While the engineering officers of the government are, under the authority of Congress, doing all they can to make this canal useful to commerce, and to keep it in good condition, this court can owe no duty to a State which requires it to order the city of Duluth to destroy it.

These views show conclusively that the State of Wisconsin is not entitled to the relief asked by her bill, and that it must, therefore, be dismissed with costs.

So ordered.

HUNTINGTON v. SAVINGS BANK.

1. A corporation created by statute can exercise no powers and has no rights, except such as are expressly given or necessarily implied.
2. The act of Congress approved May 24, 1870 (16 Stat. 137), incorporating the National Savings Bank of the District of Columbia, does not authorize the creation of any corporate stock or capital. The profits of the institution, after deducting the necessary expenses of conducting it, inure wholly to the benefit of the depositors, in dividends, or in a reserved surplus for their greater security.
3. The bond filed pursuant to the eleventh section of that act is in no sense capital owned by the bank or the corporators. It was required solely to secure depositors and creditors.

APPEAL from the Supreme Court of the District of Columbia.

This bill, for an account and a distribution of profits, was filed by Fanny A. Huntington, administratrix, and Frank H. Gassaway, administrator, of William S. Huntington, deceased, against the National Savings Bank of the District of Columbia, a corporation chartered by an act of Congress approved May 24, 1870 (16 Stat. 137), the provisions of which are stated in the opinion of the court.

Shortly after the passage of the act, Huntington, and fifteen

other persons named therein as corporators, met, organized, and elected the officers provided for. A bond in the penal sum of $200,000, conditioned to pay and to satisfy, to every depositor or person entitled, such sum as the party may be entitled to, within thirty days after such deposit shall be demanded, was filed with the clerk of the Supreme Court of the District of Columbia, and approved by one of the judges thereof. No capital was ever paid into the bank by any of the corporators, nor has it ever issued any stock, or divided shares.

The bill alleges that the bank has done a large business, and sustained no considerable losses, and that, therefore, all its profits, and the present large value of its capital stock and franchises, belong to said sixteen corporators; that neither Huntington in his lifetime, nor the complainants since his death, ever received more than about $3,000 of dividends or profits of said bank; that, while other corporators have received larger dividends, the rights of the complainants have not been recognized, but that, on the contrary, the defendant pretends that upon the death of Huntington all the rights in said business and the franchises survived to the other corporators, and that, as expressive of that view, and to injure the complainants, the defendant has, long since the death of Huntington, adopted a by-law to that effect; that the sureties on the bond are sureties of the corporation and not of each other, and that the liability of each and all of them continues until a new bond is demanded and given, as required by law; and that the right of the surviving members to choose the successor of a deceased member is an assumption wholly unsupported by law. The bill then prays for an account of receipts, expenditures, and profits since the organization of the bank, together with the dividends paid to each corporator; and that the franchises, property, and privileges be valued, and the defendant decreed to pay to the complainants one-sixteenth part thereof.

The answer of the defendant alleges that the profits realized were the property of the individuals who organized under the charter, and that they accrued from the personal credit of the several corporators and their attention to the use of the funds deposited with the bank, and not from the employment of any capital; but denies that said alleged profits, capital stock, and

franchises are of great value. It then avers that no division of profits was made among the corporators until after July, 1873, and the death of Huntington; and that the amount so divided was subsequently, in order to meet large losses incurred by reason of the financial panic, refunded by the surviving corporators; but that, in the mean time, the share of the profits due Huntington up to the time of his death, in March, 1872, had been paid to the complainants. It then denies any continuing interest of the complainants in said profits after his death, and alleges that the by-law complained of was not adopted with a view of precluding any rights which had accrued, but for the purpose of defining in the future the relation of the members of the corporation.

The answer further admits that the corporators signing the bond were sureties of the corporation and not of each other; and avers that they did not execute it as corporators, and that it was not capital, nor was its execution by the corporators required by the charter or by-laws, nor was it the consideration of the relations of the parties *inter sese;* and that, if it were, so far as Huntington's estate is concerned, such consideration would have failed, in consequence of the insolvent condition of his estate and its inability to respond in aid of the other corporators against liabilities and claims.

A general replication was filed, but no proofs were taken. The case was heard on the pleadings, and the bill dismissed. The complainants then appealed to this court.

Mr. Benjamin F. Butler and *Mr. Joseph H. Bradley* for the appellants.

1. By the provisions of the charter, the company had a capital of $200,000, as security for the repayment of the deposits with interest. Capital is the security for the payment of the debts of a corporation, in whatever form it may be, whether in cash, property, bonds, or notes. It is the fund from which calls upon the stockholders and dividends are to be paid. *Nichols* v. *Tracy*, 1 Sandf. (N. Y.) Ch. 278; *Durar* v. *Insurance Company*, 4 Zab. (N. J.) 171; Angell & Ames, Corp., sects. 157, 556; *The People* v. *Batchelor*, 28 Barb. (N. Y.) 310; *Hightower* v. *Thornton et al.*, 8 Ga. 486.

It was immaterial what that capital was, so long as the secur-

ity was satisfactory to and approved by the Supreme Court of the District. The bond given by Huntington and others was to continue until it should be replaced by some other satisfactory to that court, and is consequently binding on his estate.

2. The by-law passed after his death could have no effect on his rights.

3. If the analogy of a partnership is to be followed, the death of Huntington worked no dissolution of his partnership; for it was in an incorporeal body, to the existence of which there was no limit except the will of Congress.

So long, therefore, as his capital is used and employed, the survivors must account with his representatives for all profits. Collyer, Part. (4th Am. ed.), book 2, c. 1, sects. 129–131 Story, Part., sect. 343 and notes; Carey, Part. 290, 291.

Mr. Walter S. Cox, contra.

MR. JUSTICE STRONG delivered the opinion of the court.

The bill of the complainants assumes that, as personal representatives of William S. Huntington, deceased, they have an equitable ownership of one-sixteenth part of the franchises, property, and privileges of the defendant corporation, and that, as such representatives, they are entitled to call for an account of the profits made, and to demand payment to them of one-sixteenth part of the value of the franchises and property as well as profits. Whether this assumption is well founded or not,—whether the estate of their intestate has any pecuniary interest in the corporate franchise and property, can be determined only after a careful examination of the defendant's charter. The corporation was created by an act of Congress, approved May 24, 1870, entitled "An Act to incorporate the National Union Savings Bank of the District of Columbia." By that act, George H. Plant, William S. Huntington, and twenty-one other persons named, and their successors, were declared to be a body politic and corporate, under the corporate name mentioned, having succession, capable of suing and being sued, of having a common seal, and generally of doing and performing all things relative to the object of the institution lawful for any individual or body politic or corporate to do.

The object of the institution was declared in the fourth sec-

tion. By that it was enacted that "the corporation may receive on deposit, for the use and benefit of the depositors, all sums of money offered for that purpose," and invest the same in the manner therein described. The section then added: "The income or interest of all deposits shall be divided among the depositors, or their legal representatives, according to the terms of interest stipulated."

The eighth section required an annual report to be made to Congress, specifying the number of depositors, total number of deposits, amount invested in bank stock and deposited in bank on interest, amount secured by bank stock, amount invested in public funds, loans on mortgage of real estate, loans on personal securities, amount of cash on hand, total dividends of the year, and annual expenses of the institution; all of which to be certified and sworn to by the treasurer and five managers, or more.

The ninth section required the books of the corporation, at all times during their hours of business, to be kept open for the inspection and examination of the comptroller of the currency or depositors.

The eleventh section enacted that the corporation should file with the clerk of the Supreme Court of the District a bond with security, in the penal sum of $200,000, approved by one of the judges of the court, conditioned to pay to every depositor or person entitled such sum as the party may be entitled to, within thirty days after such deposit shall be demanded; which bond might be sued by any depositor or person entitled, after such demand and refusal to pay.

Other provisions of the act require the officers of the corporation to give security and take an oath for the faithful discharge of their duties; and forbid any officer, director, or committee charged with the duty of investing the deposits to borrow any portion thereof, or use the same, except in paying the expenses of the corporation.

These are all the provisions that have any relation to the question we are considering. It is to be noticed that the charter does not authorize the creation of any corporate stock or capital, nor does it contemplate the existence of any other than the deposits which may be made. The corporators are not

required to contribute any thing. There are, of consequence, no shareholders. Not a word is said in the instrument respecting any dividends of capital, or even of profits, to others than the depositors. Certainly, no express authority is given to make dividends to the corporators; and we discover nothing from which such authority can be inferred. The dividends of which a return is required by the eighth section to be made to Congress are evidently those spoken of in the fourth, as made to the depositors. The rules to be applied to the construction of corporate grants are well known. A corporation created by statute can exercise no powers and has no rights except such as are expressly given or necessarily implied. In this case, so far from there being an implication of any pecuniary interest in the corporators, or any duty due to them from the corporation, the contrary is expressly declared. The institution having no capital stock, whatever liability, if any, there may be to the corporators must be satisfied out of the profits made from the deposits. But the charter, when conferring the power to receive money on deposit, limits it to receiving for "the use and benefit of the depositors," and directs how it may be invested. It further declares that "the income or interest of all deposits shall be divided among the depositors or their legal representatives," not among the depositors and the corporators. It is true, the income or interest is to be divided among the depositors, "according to the terms of interest stipulated;" implying, perhaps, that the dividend may be less than the interest received by the corporation; but there is nothing in the charter that indicates the excess is for the benefit of the corporators. It is to provide for the necessary expenses of the institution authorized to be paid, and perhaps to raise a contingent fund to meet possible losses.

During the argument, our attention was called to the eleventh section of the charter, which requires the corporation to file a bond with security, in the penal sum of $200,000, conditioned to pay and satisfy depositors; and it is argued that this bond may be considered as capital contributed by the corporators named in the charter: and hence we are asked to infer that they have a pecuniary interest which entitles them to a division of the profits, as also to a share of the capital, and to a benefi-

cial interest in the franchise. If this were so, the complainants' bill does not aver that William S. Huntington was one of the obligors in the bond, or that he was even in that mode one of the contributors to capital stock. But, if it be assumed that he was, it would still be true that the bond was in no sense capital owned by the corporation or by the corporators. It was required by the charter solely for the security of the depositors or creditors of the institution. The corporation was required to give the bond with security, but what the security should be was left to the approval of a judge of the Supreme Court of the District. There was no requirement that the corporators should sign the bond, much less that all of them should. The security might have been given by strangers exclusively, or by one or more of the corporators. If given by the latter, the obligors would have been bound, not as corporators, but as any other persons having no connection with the institution.

We think the complainants have mistaken the nature of the corporation. It is not a commercial partnership, nor is it an artificial being the members of which have property interests in it, nor is it strictly eleemosynary. Its purpose is rather to furnish a safe depositary for the money of those members of the community disposed to intrust their property to its keeping. It is somewhat of the nature of such corporations as church-wardens for the conservation of the goods of a parish, the college of surgeons for the promotion of medical science, or the society of antiquaries for the advancement of the study of antiquities. Its purpose is a public advantage, without any interest in its members. The title of the act incorporating it indicates its purpose; namely, an act to incorporate a national savings bank: and the only powers given to it were those we have mentioned,—powers necessary to carry out the only avowed purpose, which was to enable it to receive deposits for the use and benefit of depositors, dividing the income or interest of all deposits among its depositors or their legal representatives. It is, like many other savings institutions incorporated in England and in this country during the last sixty years, intended only for provident investment, in which the management and supervision are entirely out of the hands of the parties whose money is at stake, and which are *quasi* benevolent and most useful, because they hold out no

encouragement to speculative dealing or commercial trading. This was the original idea of savings banks. Scratchley's Treatise on Savings Banks, *passim;* Grant's Law of Bankers, 571, where, in defining savings banks, it is said the bank derives no benefit whatever from any deposit, or the produce thereof. Such are savings banks in England, under the statutes of 9 Geo. IV., c. 92, sect. 2, and 26 & 27 Vict., c. 87. Very many such exist in this country. Among the earliest are some in Massachusetts, organized under a general law passed in 1834, which contained a provision like the one in the act of Congress, that the income or profit of all deposits shall be divided among the depositors, with just deduction of reasonable expenses. They exist also in New York, Pennsylvania, Maine, Connecticut, and other States. Indeed, until recently, the primary idea of a savings bank has been, that it is an institution in the hands of disinterested persons, the profits of which, after deducting the necessary expenses of conducting the business, inure wholly to the benefit of the depositors, in dividends, or in a reserved surplus for their greater security. Such, very plainly, is the defendant corporation in this case. The complainants have, therefore, no pecuniary interest in it, and no right to the relief they ask.

Decree affirmed.

DOBBINS'S DISTILLERY v. UNITED STATES.

1. Where the owner of a distillery and other property connected therewith leased them for the purpose of distilling, the acts or omissions of the lessee in carrying on the business of distilling while he was in possession, and with intent to defraud the revenue, although they are unknown to the owner, subject the distillery and such other property to forfeiture to the United States.
2. The declarations of the lessee, voluntarily made subsequent to his arrest, are competent evidence against the owner to show the fraudulent intent of the lessee, as are also books, letters, memoranda, and bills of lading found on the premises in a room occupied by the latter.

ERROR to the Circuit Court of the United States for the District of Iowa.

The facts are stated in the opinion of the court.

Mr. Robert G. Ingersoll and *Mr. A. L. Merriman* for the plaintiff in error, cited Wharton, Crim. Law, 825.

Mr. Assistant-Attorney-General Smith, contra.

MR. JUSTICE CLIFFORD delivered the opinion of the court.

Judicial proceedings *in rem*, to enforce a forfeiture, cannot in general be properly instituted until the property inculpated is previously seized by the executive authority, as it is the preliminary seizure of the property that brings the same within the reach of such legal process. *The Schooner Anne*, 9 Cranch, 289.

Due executive seizure was made in this case of the distillery and of the real and personal property used in connection with the same; and the information in due form was subsequently filed praying for process, and that the property seized should be condemned by the definitive sentence of the court. Pursuant to the prayer of the information, the record shows that process of monition was issued in due form, and that it was duly served by the marshal. Sixteen causes of forfeiture were alleged in the information, all of which, except the first three, were abandoned at the trial.

Sufficient appears to show that the claimant was the owner of the distillery and all the other property seized, and that he, prior to the alleged causes of seizure and forfeiture, leased the property to the party in possession of the same at the time the alleged acts of forfeiture were perpetrated by the lessee and occupant. Three of the alleged causes of forfeiture only need be noticed, and they are in substance and effect as follows: —

1. That the lessee, occupant, and operator of the distillery neglected and refused to keep the books required by law, and make the required entries in the same; that he made false entries in the books kept in the distillery, and that he omitted to enter in the same the facts required by law, with intent to defraud the revenue, and to conceal from the revenue officers facts and particulars required to be stated and entered in such books, with like intent to defraud the revenue; and that he refused to produce the books kept in the distillery when thereto requested by the revenue officers, contrary to the statute in such case made and provided. 15 Stat. 132.

2. That the distillery, the distilled spirits, and distilling apparatus seized were owned by the lessee, occupant, and operator, and some other person unknown, and were intended to be used by the owners in the business of a distiller, in a manner to defraud the United States, contrary to the act of Congress. Id. 142.

3. That the property seized was used by its owners to defraud the United States of the tax to which the spirits distilled were by law subject, and that the United States had been thereby defrauded of a part of such tax, in violation of law. Id. 59.

Service was made; and the owner and lessor of the distillery and other property seized appeared, and was permitted by leave of court to make defence. His defence consists of an averment that he has no knowledge or information upon the subject of the information, and of a denial of each and every one of the charges made against the property seized. Issue being joined, the parties went to trial, and the verdict and decree of condemnation were in favor of the plaintiffs. Exceptions were duly filed by the claimant; and he sued out a writ of error, and removed the cause into this court.

Matters set forth in the bill of exceptions which are not assigned for error will not be re-examined.

Four errors are assigned, in substance and effect as follows: 1. That the court erred in admitting in evidence the statements of the lessee of the property, as contained in the first paragraph of the bill of exceptions. 2. That the court erred in admitting the evidence set forth in that part of the bill of exceptions denominated paragraphs 2 and 3. 3. That the court erred in charging the jury that it was unnecessary for them to find that the claimant was implicated in the frauds of the lessee and operator of the distillery, or that he had any knowledge of his fraudulent acts or omissions. That if the jury find that the claimant leased the property to the occupant and operator for the purposes of a distillery, and that the lessee committed the alleged frauds, the government is entitled to a verdict, even though the jury should be of opinion that the claimant was ignorant of the lessee's fraudulent acts and omissions. 4. That the court erred in including the real estate in the decree of condemnation or forfeiture.

Instructions not included in the assignment of errors were given by the court to the jury, which deserve to be briefly noticed before proceeding to examine the rulings and instruction of the court, which, it is insisted, present a sufficient cause to reverse the judgment.

Requests for instructions having been presented by the claimant, and the same having been refused, the court, of its own motion, instructed the jury to the effect, that if the evidence satisfied the jury that the lessee and occupant of the distillery made sales of spirits produced by him which he omitted or neglected to enter in his books, with intent to defraud the government, or with intent to conceal from the officers the fact of such sales, then he would be guilty, and it would be their duty to find for the plaintiffs under the first article of the information; that the mere absence of that party from the State or the country was not of itself evidence upon which they could base a verdict, but if they found that he absconded and fled from justice when detected and charged with the frauds alleged against him in the case, that that fact might be considered by the jury, with other evidence, as tending to prove his fraudulent intents and guilt; that the information is a proceeding to condemn and forfeit to the United States certain property, both real and personal, for alleged offences against the revenue law; that the property in question consists of a distillery, with its fixtures and apparatus, and the ground within the enclosure on which the distillery stands, together with the various articles of personal property enumerated in the information, and that the present defendant is the claimant of the property contesting the grounds of forfeiture assigned by the government; that the gist of the proceeding consists in the alleged fraudulent acts and omissions of the lessee and occupant of the distillery, or his agent and employés; and whether the charges against him be positive acts done by him, or omissions to do what the law requires of him, as a distiller, fraud is a necessary element in the case, without which there can be no forfeiture.

Evidence of the statements and declarations of the lessee and occupant of the distillery, voluntarily made while under arrest and afterwards, were offered by the district attorney, as tending to show his fraudulent intent in the doing and omitting to do

certain acts assigned in the information as causes of forfeiture; and the ruling of the court in admitting the same, subject to objection by the claimant, constitutes the first assignment of error.

Throughout the trial the claimant appears to have assumed, as the theory of the defence to the information, that he was the accused party, and that he was on trial for a criminal offence created and defined by an act of Congress. Instead of that, the forfeiture claimed in the information is aimed against the distillery, and the real and personal property used in connection with the same, including the real estate used to facilitate the operation of distilling, and which is conducive to that end as the means of ingress or egress, and all personal property of the kind found there, together with the distilled spirits and stills wherever found.

Nor is it necessary that the owner of the property should have knowledge that the lessee and distiller was committing fraud on the public revenue, in order that the information of forfeiture should be maintained. If he knowingly suffers and permits his land to be used as a site for a distillery, the law places him on the same footing as if he were the distiller and the owner of the lot where the distillery is located; and, if fraud is shown in such a case, the land is forfeited, just as if the distiller were the owner. Burroughs, Taxation, 67.

Cases arise, undoubtedly, where the judgment of forfeiture necessarily carries with it, and as part of the sentence, a conviction and judgment against the person for the crime committed; and in that state of the pleadings it is clear that the proceeding is one of a criminal character: but where the information, as in this case, does not involve the personal conviction of the wrong-doer for the offence charged, the remedy of forfeiture claimed is plainly one of a civil nature; as the conviction of the wrong-doer must be obtained, if at all, in another and wholly independent proceeding. 1 Bish. Crim. Law (6th ed.), sect. 835, note 1; *United States* v. *Three Tons of Coal*, 3 Biss. 371.

Forfeitures, in many cases of felony, did not attach at common law where the proceeding was *in rem* until the offender was convicted, as the crown, Judge Story says, had no right to

the goods and chattels of the felon, without producing the record of his conviction; but that rule, as the same learned magistrate says, was never applied to seizures and forfeitures created by statute *in rem*, cognizable on the revenue side of the exchequer court, for the reason that the thing in such a case is primarily considered as the offender, or rather that the offence is attached primarily to the thing, whether the offence be *malum prohibitum* or *malum in se;* and he adds, that the same principles apply to proceedings *in rem* in the admiralty. *The Palmyra*, 12 Wheat. 1.

Corresponding views were expressed by the same learned judge in a case decided at a much later period, in which he remarked that the act of Congress in question made no exception whatsoever, whether the alleged aggression was with or without the co-operation of the owners. Nor, said the judge in that case, is there any thing new in a provision of that sort. It is not an uncommon course in the admiralty, acting under the law of nations, to treat the vessel in which or by which, or by the master or crew thereof, a wrong or offence has been committed, as the offender, without any regard whatsoever to the personal misconduct or responsibility of the owner thereof, the necessity of the case requiring it as the only adequate means of suppressing the offence or wrong, or of insuring an indemnity to the injured party. *United States* v. *Brig Malek Adhel*, 2 How. 210.

Beyond all doubt, the act of Congress in question attaches the offence to the distillery, and the real and personal property connected with the same, the words of the act defining the offence being, that if any such false entry shall be made in said books, or any entry shall be omitted therefrom, with intent to defraud or to conceal from the revenue officers any fact or particular required to be stated and entered in either of said books, or to mislead the revenue officers with reference thereto; or if any distiller shall omit or refuse to produce either of said books, or shall cancel, obliterate, or destroy any part of either of said books, or any entry therein, with intent to defraud, or shall permit the same to be done, or such books or either of them be not produced when required by any revenue officer, — the distillery, distilling apparatus, and the lot or tract of land

on which it stands, and all personal property used in the business, shall be forfeited to the United States. 15 Stat. 133.

Nothing can be plainer in legal decision than the proposition that the offence therein defined is attached primarily to the distillery, and the real and personal property used in connection with the same, without any regard whatsoever to the personal misconduct or responsibility of the owner, beyond what necessarily arises from the fact that he leased the property to the distiller, and suffered it to be occupied and used by the lessee as a distillery.

Cases often arise where the property of the owner is forfeited on account of the fraud, neglect, or misconduct of those intrusted with its possession, care, and custody, even when the owner is otherwise without fault; and Judge Story remarked, in the case last cited, that the doctrine is familiarly applied to cases of smuggling and other misconduct under the revenue laws, as well as to other cases arising under the embargo and non-intercourse acts of Congress.

Controversies of the kind have arisen in our judicial history; and it has always been held in such cases that the acts of the master and crew bind the interest of the owner of the ship, whether he be innocent or guilty, and that in sending the ship to sea under their charge he impliedly submits to whatever the law denounces as a forfeiture attached to the ship by means of their unlawful or wanton misconduct.

Analogous views were expressed by Marshall, C. J., at a much earlier period. *United States* v. *The Little Charles*, 1 Brock. 347. Objection was there taken to the admissibility of the report and manifest made by the master of the schooner when she arrived at her port of destination, the schooner having been subsequently seized for an alleged violation of the embargo laws. Two grounds were assigned in support of the objection: 1. That the paper offered was not accompanied by the entry. 2. That the declaration of the master, if admitted in evidence, would affect the owner in a criminal case. Both were overruled. Reference will only be made to the reasons given for the second ruling.

Neither confessions nor admissions of the master, it was contended, were admissible to prove the guilt of the owner; and

the Chief Justice added, that, if the case was such as was supposed in argument, the objection would be entitled to great weight. But he remarked, that the proceeding was one against the vessel, for an offence committed by the vessel, which is not less an offence, and does not the less subject her to forfeiture because it was committed without the authority and against the will of the owner. It is held, said the Chief Justice, that inanimate matter can commit no offence. But the ship, as a body, is animated and put in action by the crew, who are guided by the master. The vessel acts and speaks by the master; she reports herself by the master. It is, therefore, not unreasonable that the vessel should be affected by this report.

Apply that rule to the case before the court, and it follows that the distillery, and the real and personal property used in connection with the same, must be considered as affected by the unlawful doings and omissions of the lessee and occupant of the property as a distillery, subject to the rules and regulations prescribed by Congress. *United States* v. *Distillery*, 2 Abb. (U. S.) 192.

Suppose that is so, still it is insisted by the claimant that the declaration of the lessee and occupant of the distillery made subsequent to his arrest were not competent evidence in the case; but the court is entirely of a different opinion, as the arrest of the lessee did not to any extent affect or change his relations to the property or to his lessor. If his lease was a subsisting one at the time of his arrest, his relations to the property and the owner of the same continued unaffected by that occurrence, nor is there any thing in the authority cited by the claimant which, when properly understood, asserts any different doctrine.

Statements made by the master of a ship as to what occurred during the voyage, tending to inculpate the owner in the guilty enterprise of the ship, are not admissible in evidence against the owner, where he is charged with a crime, if the statements were made subsequent to the time when he ceased to be master and the common enterprise had come to an end; but the rule has no application here, as the arrest of the lessee did not abrogate the lease, and, if the prosecution had failed, he might have

continued to operate the distillery in spite of the accusation contained in the information.

2. Certain private books, letters, and memoranda, found in an open box in a room occupied by the lessee and operator of the distillery as a private office, were also offered in evidence, to the admissibility of which the claimant objected; but, inasmuch as it appears that they were the books, letters, and papers of the person in whose office they were found, and that they related in part to the business of the distillery, it requires no argument to show that the objection of the claimant was without merit.

Other letters and bills of lading, found by the marshal in an open box in the room occupied by the same party as a private office, were also introduced in evidence, subject to the claimant's objection, which, it appears, were addressed to the operator of the distillery, and that they tended to prove the shipment by the distiller to the firm from which they came of large quantities of high-wines, and that the firm rendered accounts to the shipper of the sales as commission merchants.

Found as the papers were in the office of the distiller, it is too clear for argument that they were properly admitted, unless it be assumed that it was the claimant, and not the distillery and the property connected with the same, who was on trial.

3. Much discussion of the remaining error assigned will not be required, as it presents the same question in principle as that involved in the first assignment of error, which has already been sufficiently considered.

None of the material facts are in dispute, nor were they to any considerable extent at the trial. Beyond controversy, the title of the premises and property was in the claimant; and it is equally certain that he leased the same to the lessee for the purposes of a distillery, and with the knowledge that the lessee intended to use the premises to carry on that business, and that he did use the same for that purpose.

Fraud is not imputed to the owner of the premises; but the evidence and the verdict of the jury warrant the conclusion that the frauds charged in the information were satisfactorily proved, from which it follows that the decree of condemnation

is correct, if it be true, as heretofore explained, that it was the property and not the claimant that was put to trial under the pleadings; and we are also of the opinion that the theory adopted by the court below, that, if the lessee of the premises and the operator of the distillery committed the alleged frauds, the government was entitled to a verdict, even though the jury were of the opinion that the claimant was ignorant of the fraudulent acts or omissions of the distiller.

Viewed in that light, the legal conclusion must be that the unlawful acts of the distiller bind the owner of the property, in respect to the management of the same, as much as if they were committed by the owner himself. Power to that effect the law vests in him by virtue of his lease; and, if he abuses his trust, it is a matter to be settled between him and his lessor; but the acts of violation as to the penal consequences to the property are to be considered just the same as if they were the acts of the owner. *The Vrouw Judith*, 1 C. Rob. 150; *United States* v. *The Distillery at Spring Valley*, 11 Blatchf. 255; *Same* v. *The Reindeer*, 2 Cliff. 57; *Same* v. *Nineteen Hundred and Sixty Bags of Coffee*, 8 Cranch, 398; *Mitchell* v. *Torup*, Parker, 227.

Examined in the light of these suggestions, as the case should be, it is clear that there is no error in the record.

Judgment affirmed.

McPHERSON v. COX.

Bill in chancery, praying for the removal of the defendant as the trustee in a deed made to secure to the complainant the payment of a bond in the defendant's possession, and for the delivery of the bond. The defendant asserts a lien on the bond for legal services rendered to the complainant. *Held*, 1. That while a state of mutual ill-will or hostile feeling may justify a court in removing a trustee, in a case where he has a discretionary power over the rights of the *cestui que trust*, and has duties to discharge which necessarily bring the parties into personal intercourse with each other, it is not sufficient cause where no such intercourse is required and the duties are merely formal and ministerial, and no neglect of duty or misconduct is established against him. 2. A contract to pay to an attorney-at-law for his services in suits concerning land, if it be recovered, a specific sum of money out of the proceeds, when it

shall be sold by the client, is not champertous, because he neither pays costs nor accepts the land, or any part of it, as his compensation. 3. Nor is it void under the Statute of Frauds because not in writing, for it may be performed within the year. 4. The land having been recovered, and by the owner sold for $38,000, for which a bond was taken and left with the attorney, the latter has a lien on the bond for money due him for his services as such. 5 Where, under the circumstances mentioned, the client brings a bill in chancery for the removal of the attorney from his position as trustee in the deed to secure the purchase-money, and for the delivery of the bond, it is the duty of the court to decide on the existence and amount of the lien set up in the answer, and to decree such delivery on payment of the amount of the lien, if one be found to exist. 6. Though the defendant, by neglecting to file a cross-bill, can have no decree for affirmative relief, it is proper for the court to establish the condition on which the delivery of the bond to the complainant, according to the prayer of the bill, should be made, and to require such delivery on the performance of that condition.

Appeal from the Supreme Court of the District of Columbia.

On the twenty-sixth day of November, 1870, Mrs. Mary A. Cox, the appellee, who was a widow, sold and conveyed to Charles H. Holden, Charles W. King, and Samuel Ford, square No. 312 of the city of Washington, for the sum of $38,000. No part of this was paid at the time, but a bond was given for it, due ten years after date, with interest payable annually; and, to secure the payment of this sum and of the interest as it fell due, the purchasers made a deed of trust, with the usual conditions, to John D. McPherson and Jesse B. Wilson. At the time of the transaction, the bond was placed in the possession of McPherson, the appellant, where it remains to the present time.

In June, 1873, Mrs. Cox filed her bill in chancery, in the Supreme Court of the District of Columbia, praying that McPherson be discharged and removed from his trust under the deed, and be compelled to deliver to her the bond of Holden, King, and Ford.

The court decreed that, on account of the ill-feeling and unfriendly relations shown to exist between the parties, by reason of a controversy between them in regard to a claim of McPherson for $5,000 for legal services, against Mrs. Cox, and of a lien for that amount on the bond mentioned, it was fit and proper that he should cease to be such trustee. It accordingly declared him removed as trustee, and all his rights and powers

vested in the other trustee, Wilson; and ordered him to deliver up the bond to Wilson, who was to hold it subject to the further order of the court. But Wilson was to receive and pay over to Mrs. Cox all that might be paid on it, except $10,000 of the latest payments, which was to be retained subject to the further order of the court.

From this decree McPherson appeals to this court.

The remaining facts in the case are set forth in the opinion of the court.

Mr. Philip Phillips and *Mr. George F. Appleby* for the appellant.

Ill-feelings and unfriendly relations of a *cestui que trust* towards his trustee constitute no ground for removing the latter from his trust. *Forster* v. *Davies*, 4 De G., F. & J. 133; *Gibbes* v. *Smith*, 2 Rich. (S. C.) Eq. 131; *Berry* v. *Williamson*, 11 B. Mon. (Ky.) 245; Hill, Trustees, 191.

The appellant was in no fault in any of the transactions complained of by the appellee; and the court below, in paying no regard to the testimony, and decreeing his removal, acted arbitrarily, and without a full consideration of the whole case. *Eyre* v. *Potter*, 15 How. 42; *Bouldin* v. *Alexander*, 15 Wall. 132; *Peter* v. *Beverly*, 10 Pet. 564; *Sergeant* v. *Howe et al.*, 21 Ill. 148; *Berry* v. *Skinner*, 30 Md. 572; *Gibbes* v. *Smith*, *supra*; *Berry* v. *Williamson*, *supra*; Tiffany & Bullard, Law Trusts and Trustees, 387.

The court erred in decreeing that the appellant should part with the possession of the bond on which he claimed a lien for his professional services as an attorney-at-law. *Platt* v. *Haler*, 23 Wend. (N. Y.) 456; *Warren* v. *Griswold*, 8 id. 666; *Worrall* v. *Johnson*, 2 Jac. & W. 218; *Russell's Case*, 1 Keny. 129; *In re Murray*, 1 Russ. 519; *In re Paschal*, 10 Wall. 483; Maughan, Solicitors and Attorneys, 107, 137; *Prevost* v. *Gratz et al.*, 6 Wheat. 481; *Zeigler* v. *Hughes*, 55 Ill. 288; *Clark* v. *Pendleton*, 20 Conn. 495; Chitty, Contr. 75, and cases cited.

The bill should have been dismissed for want of proper parties, and for multifariousness, and because it was prematurely filed. *Wilbur* v. *Almy*, 12 How. 191; 2 Story, Eq. Jur., sect. 1280; *Drane* v. *Gunter*, 19 Ala. 731; *Cruger* v. *Halliday*, 11 Paige (N. Y.), 319; *Sergeant* v. *Howe et al.*, 21 Ill. 148,

Breedlove v. *Stump*, 3 Yerg. (Tenn.) 257; Story, Eq. Pl., sect. 271.

Mr. Albert Pike, contra.

Whatever the contract was as to the amount of the contingent fee, there was no note or memorandum of it in writing, and it was not contemplated by either party that it was to be, or could be, performed on either side within a year. Therefore, by the Statute of Frauds in force in the District of Columbia, it was of no effect.

The contract was clearly champertous. *Thurston* v. *Percival*, 1 Pick. (Mass.) 415; *Kenney* v. *Browne*, 3 Ridgway, Cas. Parl. 462; *Strange* v. *Brennan*, 10 London Jurist, 649; *Stevens* v *Bagwell*, 15 Ves. 139; *Wood* v. *Downes*, 18 id. 120; *Strachan* v. *Brandon*, Eden, 303; *Stanley* v. *Jones*, 7 Bing. 369; *Lathrop* v. *Amherst Bank*, 9 Metc. (Mass.) 489; *In re Masters*, 4 Dowl. P. C. 18; *Williams* v. *Protheroe*, 5 Bing. 313; *In the Matter of Bleakley*, 5 Paige (N. Y.), 311; *Merritt* v. *Lambert*, 10 id. 352; *Rust* v. *Larue*, 4 Litt. (Ky.) 411; *Arden* v. *Patterson*, 5 Johns. (N. Y.) Ch. 44; *Satterlee* v. *Frazer*, 2 Sandf. (N. Y.) 141.

To call the fee contingent is an abuse of language.

If the contract was not champertous, it is because success was to be certain, and then the fee was enormously exorbitant and extortionate. Such contracts, made when the client is, by fear, doubt, and apprehension, under the lawyer's influence, cannot be sanctioned. *Walmesley* v. *Booth*, Barn. 478; *Drapers' Company* v. *Davis*, 2 Atk. 295; *Saunderson* v. *Glass*, id. 298; Sayer, Law of Costs, 321; Hobart, 117.

Anciently, a counsellor-at-law could bring no action in any English court, for his fee was not a debt. This was law in the time of Coke, and in that of Lord Hardwicke. The fees of counsel were *honoraria*, not *merces*. 1 Coke, Inst. 295 *a*; *Moor* v. *Row*, 1 Rep. Ch. 21; *Thornhill* v. *Evans*, 2 Atk. 331; *Chesley* v. *Beliot*, 4 T. R. 317; *Newman* v. *Payne*, 4 Bro. C. C. 352; *Aubrey* v. *Popkin*, 1 Dick. 403; *Saunderson* v. *Glass*, 2 Atk. 295; *Crossley* v. *Park*, 1 Jac. & W. 460. See also Dupin, ainé, Profession d'Avocat, i., 105-110, 147, 597, 599, 690, 698, 699, 715; Camus, Lettre de la Profession d'Avocat, id. 267, 273.

There are no transactions which courts of equity will scrutinize with more jealousy than those between attorneys and their clients, especially when the latter are of inferior capacity and inexperienced. *Mills* v. *Mills*, 26 Conn. 217; *Ex parte Plitt*, 2 Wall. C. C. 453; *Haight* v. *Moore*, 37 N. Y. Sup. Ct. 161; *McMahon* v. *Smith*, 6 Heisk. (Tenn.) 167.

The court, if its action is needed, will disregard a contract for contingent fees, and allow counsel what, under the circumstances, it deems fair. The contract must have been made in abundant good faith, without suppression or reserve of facts, or exaggeration of apprehended difficulties, or undue influence of any sort or degree; and the compensation bargained for must be reasonable, and the transaction characterized throughout by all good fidelity to the client, or the court will not hold such compensation to be valid. *Ex parte Plitt*, 2 Wall. Jr. 473.

It is for the attorney to show that the dealings between him and his client, by which the attorney is benefited, are just and fair, and purely voluntary. *Mason* v. *Ring*, 2 Abb. (N. Y.) Pr. N. S. 322; *Brock* v. *Barnes*, 40 Barb. (N. Y.) 521.

The oral contract relied on is on its face void under the Statute of Frauds. It was not for any service presently to be rendered, nor were the counsel to engage in any litigation where the result would be doubtful. They were not to attempt, and they did not attempt, to "break the lease" for the forfeiture of the contract to build. They were to wait until, some time during the seven years unexpired, the lessee might possibly, by a breach of another covenant, clearly and indisputably forfeit all right; and then they were to sue.

The appellant cannot retain the bond. He has no lien thereon, and no right thereto, —

First, Because there is no valid contract, and no indebtedness as claimed.

Second, Because the bond was received by him not in his character of attorney or solicitor, nor in the course of his professional employment for Mrs. Cox, nor in the ordinary course of his business, but in his character of trustee alone. *Stevenson*

v. *Blakelock*, 1 M. & S. 538, per Gifford, arg., and Littledale, J., and Lord Ellenborough; *Ex parte Nesbitt*, 2 Sch. & Lef. 279; *Champernown* v. *Scott*, 6 Madd. 93.

Third, Because the terms of the alleged contract are wholly inconsistent with the existence of a lien, it being for payment of the fee, at an uncertain future time, out of the proceeds of the sale of the land, when she should sell the same. *Hilton* v. *Bragg*, 7 Taunt. 21, per Lens, Sergeant, arg.; *The Case of an Hostler*, Yelv. 67, note; *Cowell* v. *Simpson*, 16 Ves. 275.

The counsel for the appellant said, below, that he did not ask a decree establishing the lien,—which, of course, he could not have upon the pleadings,—but only a decree affirming his client's right to retain the bond. That would be a decree establishing his lien. For the lien of a solicitor on the deeds and papers in his hands is merely a right to withhold them from his client, and not a right to enforce any claim against him; and, as long as the client allows them to remain in the solicitor's hands, the lien is unavailing. *Blunden* v. *Desart*, 2 Con. & L. 119; *Bozon* v. *Bolland*, 4 Myl. & Cr. 358.

Such a lien depends not on contract, but on the law. *Blunden* v. *Desart*, *supra*.

It is not fit that the appellant should continue to be trustee, holding the fee, and claiming a lien on it in his own favor. He only wears the mask of a trust, in order to have thereby an undue advantage of the beneficiary. If he has a lien, he could sell under it, and buy in the property. There is a conflict of interests, which incapacitates him and unfits him to be trustee. *Green* v. *Winter*, 1 Johns. (N. Y.) Ch. 41; *Davoue* v. *Fanning*, 2 id. 270; *Howell* v. *Baker*, 4 id. 120; *Van Horne* v. *Fonda*, 5 id. 509; Willard, Trustees, 187, 188, 194, 472; Willis, Trustees, 121, 126, 162; Hill, Trustees, 535; *Henley* v. *Phillips*, 2 Atk. 48.

The removal of a trustee, at the request of the *cestui que trust*, and the appointment of another person to sell the lands conveyed by the deed, is matter of discretion for the court, and will be ordered when good cause is shown. *Ward* v. *Dortch*, 69 N. C. 279.

Mr. Justice Miller delivered the opinion of the court.

The question for our consideration is the soundness of the decree of the court below.

The pleadings show the original bill, an amended bill, and three supplemental bills, and answers, and replications to the answers.

The charges on which complainant asked the removal of McPherson may be classified into those which affirm a neglect of his duty as such trustee, and into those which show acts and intentions hostile to her interests.

Of the first class are charges, —

1. That arrears of interest on the bond have been permitted to accumulate, and that he failed to collect such interest or to sell the property, as the deed of trust authorized.

2. That he neglected to attend to having the property insured or the taxes paid, as was his duty; and in this connection she charges that she had paid him $150 for that purpose.

Of the acts which show hostile or fraudulent intentions she charges, —

3. That, on a sale made by the obligors in the bond of part of the property, he induced her to release the lots so sold and accept thirteen notes of $1,000 each, secured by a mortgage on them, which notes she supposed was the first lien on those lots; whereas, it turned out that three other notes of like amount, of the same series, secured by the same mortgage, had been issued and sold to *bona fide* holders, and that these notes were a prior lien, and endangered her security. She alleges that this was well known to McPherson, who was acting as her agent and trustee, and was fraudulently concealed from her.

4. That he had notified Ford, one of the obligors in the bond, to pay her no more money, and had thus prevented him from paying to her the interest after it was due.

5. And, mainly, that he sets up a false and exorbitant claim of $5,000 for legal services, and claims a lien on the bond in his possession, and a right to appropriate the first money paid on said bond to the satisfaction of said claim.

The answer denies that the deed of trust imposed on him any obligation to collect the interest, or see to the insurance of the houses or to the payment of the taxes. Denies that he

ever received any money from her to pay for insurance, or any notice to sell for non-payment of interest or taxes. Denies any hostile purpose towards complainant, and any act or intent inconsistent with his duty as trustee. He admits that he does assert a claim for $5,000 due to the partnership firm of Carlisle & McPherson, for services as attorneys and counsellors, in regard to this same property, and for which he claimed, and now asserts in this answer, a lien on the bond, and a right to hold it until that sum is paid. And he denies that in the transaction by which she released certain lots covered by the deed of trust, and received the notes and deed of trust securing them, that any thing was concealed from her. And in regard to this he says that she was present when the matter was transacted, and received in person the thirteen notes and the money for which the other three notes were sold, and knew well what she was doing.

Testimony was taken on all these issues, the most important of which is that of the complainant and defendant and of Carlisle.

As preliminary to any further investigation of these issues, it is necessary to determine the defendant's duties, and his rights under the deed of trust.

After the usual clause of conveyance, it proceeds thus: —

"In and upon the trusts hereinafter mentioned and declared, and for no other purpose whatsoever, that is to say:

"In trust: *First*, To permit the said Charles H. Holden, Charles W. King, and Samuel Ford, their heirs or assigns, to use and occupy the said-described premises, and the rents, issues, and profits thereof to take, have, and apply to and for their sole use and benefit until default be made in the payment of the principal sum of the debt hereinbefore mentioned, or of some instalment of the annual interest.

"*Second*, Upon payment of any instalment of the principal of the said debt, to release to the said parties of the first part of said square, which they shall designate in the proportion of two square feet of ground for every three dollars so paid.

"*Third*, And upon full payment of the said debt of thirty-eight thousand dollars ($38,000), and of the interest thereon, and all other proper costs, charges, commissions, and expenses incurred in pursuance of this trust, to release the said square numbered three

hundred and twelve (312), or so much thereof as has not been released, unto the said parties of the first part, their heirs and assigns, at their proper cost.

"*Fourth*, And upon this further trust upon default being made in the payment of the said principal sum, or of any interest due on the same, to sell at public auction, on such terms and after such notice as the said trustees or trustee shall deem proper, so much of the said property as they or he shall deem necessary to pay the sum due, and out of the proceeds in the order following, to pay, 1st, the costs and expenses of said sale, including the usual trustee's commission; 2d, to pay the amount due the said Mary A. Cox, whether of interest or principal; 3d, to pay the said Mary A. Cox the residue of said proceeds to an amount not exceeding the principal sum, or the part thereof unpaid to be received by her in advance, in whole or part satisfaction, as the case may be, of the said principal sum; 4th, to pay over the residue, if any, to the said parties of the first part, their executors, administrators, or assigns."

There is here no duty or obligation or right to do more than two things; namely, to make the releases of parts or of the whole of the ground, as the payments entitled the obligors in the bond to have them made, and to sell the land or parts of it, as their failure to pay might justify, and in making such sale to receive and distribute the money as required. But it is very clear that the trustees assumed no obligation to look after the taxes or the insurance. The deed of trust does not mention either taxes or insurance. Nor were they bound, or did they undertake by any thing found in this instrument, to look after the payment of the annual interest. The bond was made payable to complainant, and she alone was authorized to receive the interest, and to give a valid receipt for it. Payment to either of the trustees would have been no defence to a suit by her.

It is very clear, therefore, that as there was no duty imposed upon the defendant as trustee to look after the taxes or insurance, or the collection of the interest, he was guilty of no neglect in regard to them.

If, as complainant alleges, her interest was not paid, she had a right to have the two trustees advertise and sell the property, or so much of it as would be necessary to pay what was due.

But they were not bound to do this, nor had they any right to do it, until she made request; and there is no pretence that she ever made such request or desired such action.

It is proper to say in this connection that the testimony wholly fails to show the payment of $150, or any other sum, to defendant, to be used in paying for insurance. We may also add, that there is not the slightest evidence that defendant concealed from the complainant, or in any manner misled her in the transaction, by which she released the lots mentioned, and received other security for such release. But it appears very clearly that she was present when the whole thing was done, and received the money for which the notes first due were sold; and, if she did not know they were a first lien, it is not the fault of McPherson.

There remains to be considered the charge that he forbade Ford to pay money to complainant, and that he sets up a false claim for $5,000, and the right to a lien on the bond for that sum.

These may be considered together, as they involve the main subject of controversy below, and lie at the foundation of the suit.

McPherson occupied in these transactions, and is charged in the bill and supplemental bills of complainant with misconduct in two distinct characters or relations to her; namely, as trustee in the deed we have mentioned, and as her counsel and attorney in the management of her lawsuits, and legal adviser in regard to her property. It is important to keep this distinction in mind; for it runs through the whole case, and is recognized in the decree, which not only removes him as trustee under the deed, but requires him to deliver up the bond, although it seems to recognize a right of his in that bond to be established by future litigation.

Now, as we have already said, this bond was payable directly to complainant. She was entitled to its possession, and to receive all the money paid on it, so far as any thing in the trust-deed, or any right conferred on McPherson by that trust, is concerned. Its possession, as connected with the trust, belonged neither to him nor to his co-trustee, Wilson. If, therefore, he had any right to that possession, it must be found in

the other relation we have mentioned, and we will proceed to consider that.

We have the deposition of three witnesses, and three only, who knew and could tell the facts on which the lien of McPherson must rest, if it exist at all. These are the complainant, the defendant, and Carlisle, the law-partner of defendant, and interested with him in the lien asserted.

In regard to the facts which are relied on to create the lien there does not seem to be much, if any, difference in the statements of the parties. It is only when they come to the amount that these differences are irreconcilable.

Without entering minutely into the examination here of what each witness says, we will first state what we consider established beyond question.

It appears that complainant had made to Angus and Lewis a long lease of square 312, with a right in them to purchase at a fixed price; namely, $15,000. That, while they held the property under this contract, it had risen very much in value, and Mrs. Cox became desirous to get released from it. For this purpose she employed McPherson and Carlisle as her lawyers; and they succeeded in recovering possession of the property, avoiding the contract, and recovering rents and profits amounting to $2,700. In doing this, they successfully prosecuted an action of ejectment, a separate action for mesne profits, and defended a suit in equity brought by Angus and Lewis to enforce the original contract. That, in employing the law-firm of Carlisle & McPherson to attend to this business, she agreed to pay them a fixed sum for their services, which, in a letter written to them after a controversy had arisen as to the amount so fixed, she says, "was to be paid out of the proceeds of sales of the property, as such proceeds shall be realized." After the embarrassment of Angus and Lewis's claim had been removed, the whole square was sold, as we have already shown, to Holden, King, and Ford, and the deed of trust and bond made by them, and the bond left with the defendant. This bond was the first proceeds of the sale of the square.

Some time after this, and after Holden, King, and Ford had built houses on some of the lots of the square, they sold them to James Pike for $16,000, and obtained the release of them

by Mrs. Cox, from the lien of the deed of trust, by giving her $13,000 in those notes as payment on the bond, and paying her in cash $4,000, the proceeds of the other notes given in the same transaction. In the deeds of trust given by Pike on those lots to secure said notes McPherson and Wilson were made trustees, as they had been in the deed from which they were released; but, though the original bond remained through all these transactions with McPherson, the money and the notes arising from this last sale were handed over to complainant. Although several years had elapsed, and Carlisle & McPherson had no written agreement with complainant about their fee, they permitted the entire proceeds of this last sale, and of the recovery for rents and profits, and the interest which Holden & Co. had paid on their bond, to go into complainant's hands without objection, and had during that time frequently loaned her money, had acted as her counsel and attorneys in both the sales, and drawn all the papers necessary to secure her interests. Thus far the facts seem undisputed.

But not long after this last transaction McPherson addressed a note to Mrs. Cox, suggesting that the matter of the fee for the services of his firm, resting only in parol, was not on that account in a satisfactory position, and enclosing her a writing, which he requested her to sign, acknowledging an indebtedness of $5,000 for their services, and a lien on the securities for the land sold. To this she replied next day, refusing to do as requested, because she said the fee was to be $2,500, and not $5,000.

An animated correspondence now ensued between Mrs. Cox and McPherson, into which Carlisle was also drawn by letters addressed to him personally by Mrs. Cox.

Thereupon McPherson, either with a view to bring her to terms, or more probably as a protection to his right of lien, gave notice to Ford, who had bought out his other partners, not to pay any thing more to Mrs. Cox on the bond; but learning a few days afterward that Ford construed this notice, or used it as a pretext for delaying the payment of the interest due, he told him he could pay the interest to Mrs. Cox. Not long after this the present bill was filed.

It will thus be seen from this condensed statement of facts

undisputed that complainant acknowledged that she had agreed to pay to Carlisle & McPherson, out of the proceeds of the sale of the property, if she was successful in getting rid of the contract with Angus and Lewis, $2,500, as their compensation, of which she has thus far never paid or tendered a dollar; and that they had successfully performed their part of the agreement. As regards the difference between the parties as to the amount to be paid by complainant, the clear and circumstantial statements of Carlisle and McPherson, under oath, are not overcome by any thing produced by complainant, and we are satisfied she agreed to pay $5,000.

This contract is now assailed as illegal, on three grounds, which we shall consider in their order: —

1. The first is, that the amount is so large in proportion to the services rendered, and the promisor being a woman without other advice when she entered into the contract, that a court of equity should hold it void, as an unjust extortion from an unprotected female.

Our answer to that is, that we believe the services rendered were worth the money, especially as they were to get nothing unless they were successful.

2. It is said the contract is obnoxious to the doctrine of champerty.

The answer is, that the attorneys did not agree to pay any of the costs, they did not agree to take any part of the land, which was the subject of the suit, for their compensation, nor did they agree to take any thing but money. The single fact that they agreed to wait for their money until complainant could sell the land, and to receive a fixed sum out of the purchase-money, does not, under any definition of champerty, bring it within that principle.

3. It is said to be within the Statute of Frauds, because not in writing, and not to be performed within a year.

But the Statute of Frauds applies only to contracts which, by their terms, are not to be performed within a year, and do not apply because they may not be performed within that time. In other words, to make a parol contract void it must be apparent that it was the understanding of the parties that it was not to be performed within a year from the time it was made.

Peter v. *Compton*, Skin. 353, decided in King's Bench by Lord Holt, and the cases collected under that one in 1 Sm. L. C. 432.

There is nothing in the present contract to show that it was not to be performed inside of a year, nor any thing to show that it could not have been fully performed within that time. The action of ejectment which settled the forfeiture of the lease might have been brought and tried within that time, and the readiness with which the property sold for $38,000 shows that the amount of the fee might have been realized and paid before the year was out. At all events, it cannot be said that the contract was not to be performed within that time.

We are also of opinion that this obligation on the part of complainant to pay $5,000 to Carlisle and McPherson was, and is now, a lien on the bond in McPherson's possession. It is so by the express contract of the parties, as admitted by Mrs. Cox. It was to be paid out of the proceeds of the sale of the land recovered by the suit in equity in which they were employed. The first sale of the land was in a lump, and this bond for $38,000 represents the proceeds of that sale. It is the only proceeds of the sale. It is also a very fair inference, from the fact that the bond was left in McPherson's possession, that it was done as a recognition of the lien. There is no other reason why it should have been left with him. It was no part of his right or his duty as trustee to hold it. Its possession was in no way essential to any of the very few acts which, as trustee, McPherson could be called on to do under the deed of trust. It is, therefore, manifest that it was left with him as her attorney, or as a security for his debt. It is none the less clear to us, that, apart from the express agreement for a lien, the same result follows from his relation to her as attorney, and the possession of this bond as a paper coming to him in the course of his employment in that character. We have decided in the case of Paschal (10 Wall. 483), that an attorney has a lien by law, under circumstances similar to these, for all that is due him as attorney or counsellor, on the papers of his client in his hands.

McPherson has done nothing to waive or defeat this lien. He might very well have insisted, when the square was sold

to Holden & Co., that the fee should then have been paid or secured to him out of the purchase-money. But he accepted possession of the bond as a concession to his client. He continued her counsellor all through the transaction. He advised with her about the sale. He drew up all the writings necessary to the sale and to the security of the purchase-money. His consent to act as trustee in a matter where his duties were merely formal, and in which another trustee was joined with him, are in no sense inconsistent with his position as her attorney, and his rights growing out of that relation. Until she changed them their interests were the same; namely, the faithful and prompt payment of the money due on the bond. The money was hers, but out of it she was to pay the $5,000.

Nor have we been able to discover in the conduct of McPherson any hostility to complainant or to her interests, or any thing in what he has said or done which is inconsistent with the faithful performance of his duty to her under the deed of trust. The only act looking in the slightest in that direction is his warning to Ford to pay Mrs. Cox no more money on the bond. Finding her angry with him, and denying his right to hold the bond as security for his fee, it was necessary to the protection of the security to give some warning to the obligor of his right to be paid before the money all passed into her hands. It may be well doubted if he was not entitled, now after all that had passed, to be paid out of the first money yet to be paid on the bond, even if it were the interest. But, on reflection, he waived that, and told Ford he could pay her the interest. But there was in all this, and in all the quarrel, mainly carried on by complainant, nothing which could in the least interfere with, or would be likely to color his action jointly with, Wilson in executing releases when the property was sold or money paid, or in advertising and making sale when required by complainant in default of payment. If, in doing this, he wished to retain his fee, or any part of it, we have already shown it was his right to do so; and that right cannot be inconsistent with any right of hers, since she was the person who was to pay, and whose debt would be paid, by such a course.

We are, therefore, of opinion that McPherson has a right

to the possession of the bond until the fee of $5,000 is paid, and that he has done nothing inconsistent with his duty as trustee under the deed of trust, nor displayed any hostile feeling to the real legal rights or interest of complainant, nor failed or neglected to perform any duty devolving on him as such trustee.

What, then, should be the decree of the court?

1. As to the removal of McPherson from the trusteeship we think there is no ground for such action.

Where a trustee is charged with an active trust, which gives him some discretionary power over the rights of the *cestui que trust*, and which brings him into constant personal intercourse with the latter, it may be conceded that the mere existence of strong mutual ill-feeling between the parties will, under some circumstances, justify a change by the court. But there is here no such case. McPherson will have, and can have, nothing to do as trustee which requires any personal intercourse with Mrs. Cox. Unless Ford wishes to pay part of the money and ask a release of part of the property, he has literally nothing to do as trustee until the bond is due. And in all that he may have to do as trustee, his duty is so merely ministerial and so clearly defined, that he can do her no harm whatever. When, in addition to this, it is considered that there is another trustee with equal power, and without whom McPherson can do nothing, we see no danger to her interests or any reason for his removal.

The following authorities support this view of the matter: *Forster* v. *Davies*, 4 De G., F. & J. 133; *Gibbes* v. *Smith*, 2 Rich. (S. C.) Eq. 131; *Berry* v. *Williamson*, 11 B. Mon. (Ky.) 245; Perry, Trusts, sect. 277.

Since, as we have shown, the appellee has a right to the possession of the bond, and there exists no reason for his removal, it is suggested that there should simply be a dismissal of complainant's bill. In support of this view, it is strenuously maintained, by what we think is a misconception of the case as made by the pleadings and the evidence, that the amount of the fee claimed by McPherson and Carlisle, and the existence of the lien, are not issues in this suit of which the court can take notice, or on which it can found any action. It must be

confessed that the case is so far embarrassed by the unaccountable failure of the appellee to file a cross-bill asking for relief by a decree establishing his debt and his lien, that no affirmative relief of that character can be given. But it is not true that the existence and the amount of that lien are not legitimate subjects of inquiry in this case, and necessary to a proper decree.

Leaving out the matter of the trust, of which we have already disposed, complainant asks as relief in regard to this bond, that it be delivered up to her. As a legitimate defence to this demand, McPherson answers that he has a right to the possession of the bond as security for $5,000 due him by complainant. She, by supplemental bills and replications, says you have no such lien, or, if you have a lien, it is only for $2,500. It is beyond dispute, therefore, that the pleadings put in issue the existence of the lien and the amount of that lien for which McPherson can hold the bond. The testimony taken is also mainly devoted to those points. The issue is fairly made. What could be more pertinent to the relief sought, and to the defence against it, than both these issues? It is clear that the bond belongs rightfully to Mrs. Cox. If there is no such lien, she is entitled absolutely to the relief she asked; namely, to have its possession restored to her. If there is a lien on it, she is entitled to have that possession on payment of the lien; and whether she is bound to pay $2,500, or $5,000, or nothing, is to us very clearly a legitimate issue to be tried in the suit. So far, then, as ascertaining her right to the possession of the bond, and the terms or conditions on which that right could be enforced by the court, it seems to us that the issue of the existence of this lien and its amount were not only fairly in the case, but necessary to be determined to enable the court to render such a decree as the pleading, the evidence, and the relief sought required.

That decree is this: —

That the decree of the Supreme Court of the District be wholly reversed. That a new decree be rendered there, denying so much of the relief sought by complainant as prays for the removal of the defendant from his trusteeship. That it be declared that complainant is entitled to the possession of the

bond of Holden, King, and Ford, on payment to McPherson of the sum of $5,000, *for which he rightfully holds said bond as security for his services to complainant as her attorney and counsel. And that McPherson have liberty, if he be so advised, to file a cross-bill for the establishment of his debt and his lien, and for such remedy for its enforcement as equity can give in the case.*

MR. JUSTICE STRONG. I concur in the reversal of the decree of the court below, but I dissent from so much of the opinion as determines the amount due Messrs. Carlisle and McPherson as compensation for their professional services, for which the lien on the bond to Mrs. Cox is asserted. I think that the amount, as well as the existence of the debt, should be established in an issue sent to a court of law, especially as no cross-bill was filed.

MR. CHIEF JUSTICE WAITE. I dissent from the judgment in this case, and am entirely satisfied with the decree below.

MR. JUSTICE HUNT and MR. JUSTICE HARLAN also dissented.

UNITED STATES v. DRISCOLL.

A. contracted to cut, furnish, and deliver in Washington City, at specified rates, granite to the United States, at such times as it might require, and to furnish such number of men as it might deem necessary to the proper prosecution of the work. The full cost of their labor, increased by fifteen per cent, was also to be paid to him by the United States. For every day that he was in default he was to forfeit and pay $100. *Held*, that there was no privity between the United States and the men employed by him in the execution of his contract.

APPEAL from the Court of Claims.

The facts are stated in the opinion of the court.

The court below rendered judgment *pro forma* for the claimant.

The Solicitor-General for the United States.

Mr. Joseph Casey and *Mr. Thomas J. Durant*, *contra*.

MR. JUSTICE SWAYNE delivered the opinion of the court.

This is an appeal from the Court of Claims. The petition of the appellee alleges that he worked the number of days specified, for the United States, ten hours a day, when he was required by law to work only eight hours a day; that he was paid at the rate of ten hours a day; and he claims further compensation for such number of days as the additional two hours aggregated will make, computing a day's work at eight hours instead of ten hours.

This is the basis and extent of the claim. The United States, among other defences, allege that the appellee was never employed by them, nor on their behalf.

The case is fully set forth in the findings of the Court of Claims. A brief statement of the facts will be sufficient for the purposes of this opinion.

The United States contracted with Ralph Ordway to furnish, from certain quarries near Richmond, Va., granite, to be delivered in Washington City. He was to be paid at specified prices.

They contracted with him, further, "to furnish all the labor, tools, and materials necessary to cut, dress, and box, at the quarry or quarries, all the granite, in such manner" as should be directed. The United States were to pay him "the full cost of said labor, tools, and materials, and also the insurance on the granite, increased by fifteen per cent on such cost."

The contract contained this further clause:—

"And the party of the second part (Ordway) further agrees to furnish such number of men as may be deemed necessary for the proper prosecution of the work by the party of the first part (the United States); and the party of the second part further agrees to cut as well as furnish and deliver all the granite herein contracted for, at such times as may be required by the party of the first part, and in default thereof to forfeit and pay to the United States the sum of one hundred (100) dollars per diem for each and every day thereafter, until the final delivery of the same, which sum shall be deducted from any moneys which may be due him; and if that amount be not due him, then his bondsmen are to be held liable for any deficiency, to be recovered of them by suit in the name of the United States."

The larger the amount of the cost, the larger would be the amount to be paid Ordway. His interests and those of the United States were, in this particular, therefore, in direct antagonism. Hence the United States employed and paid a superintendent and clerk, who were to be present all the time. The former was to see that every thing was done according to the contract, and that no frauds were committed on the government. It was also his duty, at the end of every month, to certify Ordway's accounts for his expenditures during that time. The clerk was his assistant, and subject to his directions. The employés were engaged and paid as follows: When a man was set to work, Ordway's foreman gave his name to the clerk of the superintendent, who put it on the time-book. The foreman put the price opposite the name. The clerk kept a ledger account, made out a pay-roll at the end of each month, and had the men sign it. It was approved by the superintendent, and delivered to Ordway, and he received the amount from the United States, with the fifteen per cent added, according to the contract. He then paid the men, according to the pay-roll and their receipts thereon. The appellee was employed and paid in this way.

It is clear that there was no privity between the appellee and the United States. Ordway employed him and was to pay him, and did pay him. The United States had no interest in the rate or amount paid, save that the sum so paid, with fifteen per cent in addition, was the measure of the amount to be paid to Ordway. The fact that Ordway procured the appellee's receipts, presented his own vouchers to the government, and received his pay before paying his hands, is immaterial as regards the rights of the parties. It was a convenience to the contractor, and safe for government. The hands trusted the former; and, if he had failed to pay them, the loss would have been theirs. The government having the contractor's receipts, it could not have fallen upon the United States. The acknowledgment of payment by the employés, before getting their money, was wholly their own concern. Ordway was bound by his contract to have the work done as specified; and upon every default he was liable for a penalty of $100 a day until he should fulfil his undertaking. This stipulation is incongruous with the

idea of his being an agent and not a contractor. The latter was his relation to the government. Between himself and the appellee it was simply that of employer and employé.

The mode, manner, and rate of Ordway's compensation was a matter between him and the United States, and was one with which the appellee had nothing to do. Hence, in this case, it can in nowise affect the rights of the parties. The appellee stands upon exactly the same ground as the employés of any other contractor with the government. It follows that he can have no rightful claim against the appellant. This is conclusive against him. It is, therefore, unnecessary to consider the other points of defence insisted upon by the United States.

Judgment reversed, and the case remanded with directions to dismiss the petition.

WALKER v. JOHNSON.

1. A parol contract for the delivery of materials is not void under the Statute of Frauds, unless it appears affirmatively that it was not to be performed within a year. If performance by the promisor can be required by the promisee within a year, the contract is valid.
2. A subsequent verbal agreement varying the manner of delivering them is binding.
3. The comments of the judge in his charge to the jury, as to the circumstances under which the defendant might be entitled to damages against the plaintiff, cannot be a ground of error, when there was no such issue, and when the defendant could not have been thereby prejudiced.
4. The court is not bound, at the request of counsel, to give as instructions philosophical remarks copied from text-books, however wise or true they may be in the abstract, or however high the reputation of the authors.

ERROR to the Circuit Court of the United States for the Northern District of Illinois.

On the twenty-first day of July, 1869, Edwin I. Sherburne, Edwin Walker, and Charles B. Farwell entered into a written contract with the canal commissioners of the State of Illinois, for the construction of a lock and dam in the Illinois River, near the city of Henry, in which they agreed to commence the work on or before the first day of August, 1869, and complete it by the first day of September, 1871.

Sherburne shortly after assigned his interest in this contract to James K. Lake, and Lake, Farwell, and Walker assigned the same, with the approval of the commissioners, to Willard Johnson, plaintiff below. But while Farwell, Lake, and Walker were the contractors, they made an agreement between themselves, in writing, by which, among other things, Walker was "to furnish all the stone necessary for the construction of the lock and dam, to be by him delivered on board of canal-boats at Henry, as the same might be required in the progress of the work, to be of the description required for said work;" and the prices that he was to receive for the various kinds of stone so delivered were settled. It is alleged by Johnson, that, after the contract with the commissioners had been assigned to him, Walker agreed with him to furnish the stone for the work in the same manner and on the same terms as in this contract with his former partners. And that, by reason of his failure to do so, he, the plaintiff, was greatly damaged; and for that he brought this action. A verdict and judgment for $6,500 were rendered against defendant Walker, to which he prosecutes the present writ of error.

The errors assigned relate exclusively to exceptions taken to the charge of the judge, and to his refusal to charge as requested by the defendant. They are fully stated in the opinion of the court.

Mr. Melville W. Fuller for the plaintiff in error.

The contract was void under the Statute of Frauds. Browne, Stat. Frauds, sects. 279, 283; *Packet Company* v. *Sickles*, 5 Wall. 580; *Birch* v. *The Earl of Liverpool*, 9 Barn. & Cress. 392; *Dobson and Another* v. *Espie*, 2 H. & N. 81; *Boydell* v. *Drummond*, 11 East, 142.

The alleged parol contract to deliver the stone by railroad, instead of by canal-boats as agreed upon in the original contract, was without consideration, and therefore void. *Gross* v. *Nugent*, 5 Barn. & Adol. 65; *Lattimore* v. *Hensen*, 14 Johns. (N. Y.) 330; *Munroe* v. *Perkins*, 9 Pick. (Mass.) 295; *Adams* v. *Nichols*, 19 id. 275; *Crowley* v. *Vitley*, 7 Ex. 319; *Payne* v. *New. S. C. Co.*, 10 id. 291; *Thurston* v. *Ludwig*, 6 Ohio St. 1; *Hunt* v. *Barfield*, 19 Ala. 117; *Gerhard* v. *Bates*, 2 El. & Bl. 486; *Swain* v. *Seamans*, 9 Wall. 254.

It was also void, because entered into after breach in the original contract.

Mr. Francis Kernan, contra.

If by the terms of a contract, the subject-matter, and the situation of the parties, it is shown that the contract can, and reasonably may in its execution, be required to be performed within a year, it is not within the Statute of Frauds. Browne, Stat. Frauds, sects. 274, 275, 278 *a*, 279, 281, 286, and cases cited; *White* v. *Murtland*, 71 Ill. 250; *Kent* v. *Kent*, 62 N. Y. 564; *Morley* v. *Noblett*, 42 Ind. 85; *Larimer* v. *Kelly*, 10 Kan. 298; *Gault* v. *Brown*, 48 N. H. 183; *Peters* v. *Westboro'*, 19 Pick. (Mass.) 365; *Blake* v. *Cole*, 22 id. 99; *Somerley* v. *Buntin*, 118 Mass. 286; *Blair* v. *Walker*, 39 Iowa, 410; *Greene* v. *Harris*, 9 R. I. 401; *Hodges* v. *Richmond*, id. 487; *Souch* v. *Strawbridge*, 2 C. B. 811; *Plimpton* v. *Curtis*, 15 Wend. (N. Y.) 336; *Peter* v. *Compton*, 1 Sm. L. C. 432.

There was no error in the instruction of the court below, that it was competent for the parties to modify the terms of their original contract by agreeing that the stone should be delivered by railroad instead of by canal-boats. Their mutual promises were a sufficient consideration. *Law* v. *Forbes*, 18 Ill. 568; *Bishop* v. *Busse*, 69 id. 403; *Cooke* v. *Murphy*, 70 id. 96; *Carrier* v. *Dilworth*, 59 Pa. St. 406; *Hill* v. *Smith*, 34 Vt. 535; *Monroe* v. *Perkins*, 9 Pick. (Mass.) 298.

MR. JUSTICE MILLER delivered the opinion of the court.

The first error arises upon the proposition of defendant, that the contract, being one not to be performed within a year from the time it was made, and resting only in parol, was void, and could not sustain the action. Evidence was given which tended to show that the agreement between plaintiff and defendant was made early in November, 1869, and renewed or modified in April, 1870. As by the terms of the original contract with the canal commissioners the work was to be completed on or before Sept. 1, 1871, defendant insisted that his contract for delivery of stone had the same time to run; and his counsel asked the court to instruct the jury that it was void, if it appeared from the Farwell, Lake, and Walker contract that it was not the intention and understanding of the parties that the same should be per-

formed within the space of one year from the making of the verbal agreement between plaintiff and defendant.

The court refused this instruction, and told the jury that if it appeared from the contract itself that it was not to be performed, or was not intended to be performed, within a year, it was void; but that if it was a contract which might have been performed within a year, and which the plaintiff, at his option, might have required the defendant to perform within a year, it was not within the statute.

We think the court ruled correctly, both in what it charged and in what it refused.

1. In order to bring a parol contract within the statute, it must appear affirmatively that the contract was not to be performed within the year. We have had occasion to examine this question very recently in the case of *McPherson* v. *Cox* (*supra*, p. 404). We said, in that case, that the statute "applies only to contracts which, by their terms, are not to be performed within the year, and not to contracts which may not be performed within that time." The court said, in regard to that case, which was a contract by a lawyer to conduct a suit in court, that there was nothing to show that it could not have been fully performed within a year. So, in this case, the lock and dam were to be completed on or before Sept. 1, 1871. Clearly, the contractor had the right to push his work so as to finish it before November, 1870, which would have been within a year from the date of Walker's contract with plaintiff.

If plaintiff had a right to do his work within that time, he had a right to require of defendant to deliver the stone necessary to enable him to do it. There is no error in the action of the court on this branch of the subject.

2. It will be observed that, by the agreement of Walker with his partners, he was to deliver at Henry in canal-boats. Evidence was given tending to show that, in the spring of 1870, it was agreed between him and plaintiff that he should deliver by railroad; and the court charged the jury that it was competent for the parties to change the contract in that regard, if they chose; and that if the jury found that defendant did so agree, he was bound by such agreement as he made, if any.

The original contract between Johnson and Walker was in

parol; and if the parties, for their mutual convenience, or for no good reason at all, chose a delivery by rail, both of them consenting thereto, we think that the change in the mode of delivery became a part of the contract.

3. There was evidence tending to show that, while defendant was performing part of the contract, he received notice from plaintiff that he would take no more stone from him; and also evidence that, shortly after this, the parties had an interview, in which this notice was waived, and Walker agreed to go on with the contract. On this part of the case the court said:—

"If the testimony satisfies you that the defendant did, after the notice of the 12th of May, recognize the contract as still in force, and promise the plaintiff that he would go on and complete the same, the defendant cannot now claim as a defence to this action that said notice released him from the performance of the contract.

"If, on the contrary, you are satisfied that the defendant made no agreement after the notice to stop on the 12th of May, recognizing the contract as still in force, or promising to perform it or continue it in force, then the defence may be considered made out, although the notice to suspend might entitle the defendant to dama es; but I do not think it necessary to discuss the question of the defendant's damages."

The court, however, did, in answer to a suggestion of counsel for defendant, that the latter would have a right to damages for the withdrawal of the contract by plaintiff, proceed to make some remarks on that subject to which defendant excepts, and which he now assigns for error.

We do not see any thing in these remarks to complain of, except that they were irrelevant to any issue in the case. There was no plea or cross-demand under which those damages could have been passed upon by the jury. As they in nowise prejudiced defendant in the present action, we are not called on to consider further their soundness as matter of law.

4. The court was asked to instruct the jury "that verbal admissions, while, if deliberately made and precisely identified, they frequently furnish satisfactory evidence, are to be received with great caution; and the attention of the jury should be directed, in passing upon alleged verbal admissions, to whether

the witnesses testifying thereto distinctly understood the party charged in what he said, and whether they have or have not, intentionally or unintentionally, failed to express what was actually said." But the court refused said instruction.

This is the ground of the last assignment of error.

There is nothing in the testimony, as we find it in the bill of exceptions, to which such a charge could apply. There are no admissions, properly so called, of defendant relied on in the case. The testimony in regard to the renewal of the contract after plaintiff's letter to defendant, that he would receive no more stone from him, is not an admission: it is a conversation between plaintiff and defendant, in which the contract is renewed or the abandonment waived. It is explicitly stated by plaintiff that defendant agreed to recommence the delivery of stone and complete the contract. Whatever else this may be, it is no admission. This word, in the sense of the quotation from Greenleaf, asked by counsel as a charge, means an admission by a party of some existing fact or circumstance which tells against him in the trial, and does not relate to the terms in which a substantive verbal contract is made by the parties.

Besides, it is apparent that the attention of the jury was directed by the court to all the matters essential to their understanding the case; and we do not admit that a court is bound to give to the jury, at the instance of counsel, every philosophical remark found in text-books of the law, however wise or true they may be in the abstract, or however high the reputation of the author.

We find no error in the record, and the judgment of the Circuit Court is

Affirmed.

BAIRD v. UNITED STATES.

1. A. presented an unliquidated claim against the United States for $151,588.17, which was audited by the accounting officers, and allowed for $97,507.75. He was informed of this adjustment, and of the principles upon which it had been made; and a draft for the amount allowed, payable to his order, was sent to him, which he received and collected without objection. *Held*, that his receipt of the money was equivalent to an acceptance of it in satisfaction of the claim.
2. Where a party brings an action for a part only of an entire indivisible demand, and recovers judgment, he is estopped from subsequently bringing an action for another part of the same demand.

APPEAL from the Court of Claims.

In March, 1864, the government, requiring an immediate supply of locomotive engines for the use of the armies operating in Tennessee, made an order upon M. W. Baldwin & Co., a firm of locomotive builders at Philadelphia, for fifteen engines, to be delivered as soon as possible, and to the exclusion of all other contracts or interests. The price fixed upon was $18,947.72 for each engine, and the government tax to be paid on delivery. In addition to this, the firm was authorized to charge the government any advance there might be after Nov. 9, 1863, in the cost of labor and materials used in the construction, and any damage resulting from the preference given this order over other contracts.

The order was accepted upon the terms proposed, and the locomotives delivered at intervals of four or five days, between May 3 and June 30, 1864. The fixed price was paid according to agreement; and, Sept. 14, 1864, Baldwin & Co. presented their claim for the difference in the cost on account of the advance in the price of labor and materials, which was then stated to be $151,588.17. This claim was audited by the government, and allowed for $97,507.75; and the firm was informed of the amount of the allowance, and the principles upon which the adjustment had been made, as early as Jan. 23, 1865. On the 8th of April, a draft was sent for the amount found due, payable to the order of the firm; which was received and collected without objection.

Subsequently, this appellant, as the sole surviving partner of

the firm, brought his action in the Court of Claims, upon the contract, to recover the damages which it was alleged the firm had sustained by giving the order preference over other contracts and interests; and at the December Term, 1869, of that court, judgment was rendered against the United States for $23,750.

On the 2d of May, 1870, one day before the expiration of six years from the date of the delivery of the first engine under the order, this action was brought to recover the "residue of the amount of the advance in labor and materials over the cost of the same on the 9th of November, 1863; which residue is the difference between the $128,276.50 claimed and the government tax thereon ($3,848.29), in all, $132,124.79, and the $93,507.75 paid, making the residue $38,617.04." The Court of Claims, while finding that the actual advance over and above what had been paid was the amount claimed, gave judgment in favor of the United States; whereupon the claimant appealed to this court.

Mr. John D. McPherson for the appellant.

The Solicitor-General, contra.

MR. CHIEF JUSTICE WAITE delivered the opinion of the court.

It is, no doubt, true that the payment by a debtor of a part of his liquidated debt is not a satisfaction of the whole, unless made and accepted upon some new consideration; but it is equally true, that, where the debt is unliquidated and the amount is uncertain, this rule does not apply. In such cases the question is, whether the payment was in fact made and accepted in satisfaction.

It is clear that, in September, 1864, when this account was first presented to the government, the amount due was uncertain, because more was then demanded than is now claimed. The counsel for the appellant say, in their argument, that this reduction has been made in the light of the testimony taken in the suit for indemnity. Under such circumstances, it was the duty of the auditing officers of the government to state the account themselves before making payment. This they did, and reported to the claimant the amount found due, with the

principles upon which the adjustment had been made. In effect, this was an offer to pay the balance stated in satisfaction of the claim. The acceptance of the money afterwards, without objection, was equivalent to an acceptance of the payment in satisfaction.

But there is another objection to the recovery which is equally good. It is well settled that, where a party brings an action for a part only of an entire indivisible demand, and recovers judgment, he cannot subsequently maintain an action for another part of the same demand. *Warren* v. *Comings*, 6 Cush. (Mass.) 103. Thus, if there are several sums due under one contract, and a suit is brought for a part only, a judgment in that suit will be a bar to another action for the recovery of the residue. Here was a contract by which the government was bound to pay for the engines in accordance with terms agreed upon. The entire price to be paid was not fixed. A part was contingent, and the amount made to depend upon a variety of circumstances. When the former action was commenced in the Court of Claims, the whole was due. Although different elements entered into the account, they all depended upon and were embraced in one contract. The judgment, therefore, for the part then sued upon is a bar to this action for the "residue."

Judgment affirmed.

MURRAY v. CHARLESTON.

1. Wherever rights, acknowledged and protected by the Constitution of the United States, are denied or invaded by State legislation, which is sustained by the judgment of a State court, this court is authorized to interfere. Its jurisdiction, therefore, to re-examine such judgment cannot be defeated by showing that the record does not in direct terms refer to some constitutional provision, nor expressly state that a Federal question was presented. The true jurisdictional test is, whether it appears that such a question was decided adversely to the Federal right.
2. The provision in that Constitution, that no State shall pass a law impairing the obligation of contracts, is a limitation upon the taxing power of a State as well as upon all its legislation, whatever form it may assume. Therefore, a law changing the stipulations of a contract, or relieving a debtor from a strict and literal compliance with its requirements, enacted by a State in the exercise of that power, is unconstitutional and void.

3. A city, when it borrows money and promises to repay it with interest, cannot, by its own ordinances, under the guise of taxation, relieve itself from performing to the letter all that it has expressly promised to its creditors.
4. Debts are not property. A non-resident creditor of a city cannot be said to be, in virtue of a debt which it owes him, a holder of property within its limits.

ERROR to the Supreme Court of the State of South Carolina.

In 1783, the State of South Carolina incorporated the city of Charleston. Among other powers conferred upon it was that of making "such assessments on the inhabitants of Charleston, or those who hold taxable property within the same, for the safety, convenience, benefit, and advantage of the city, as shall appear to them expedient."

Under this power, there was an ordinance of the city, ratified March 22, 1870, "to raise supplies for the fiscal year ending Dec. 31, 1870." Sect. 1 authorizes and requires the city appraiser to assess a tax of two cents upon the dollar of the value of all real and personal property in the city, for the purpose of meeting the expenses of the city government for the current fiscal year.

Sect. 3 directs that the tax assessed on city stock shall be retained by the city treasurer out of the interest thereon, when the same is due and payable.

A similar ordinance was ratified March 1, 1871, for the fiscal year ending Dec. 31, 1871.

The tax was accordingly assessed. That upon the city stock was retained out of the interest due on it to the holders thereof.

Murray, as a holder, brought suit, Nov. 17, 1871, in the Court of Common Pleas for the county of Charleston against the city council of Charleston, to recover the amount of the tax which the treasurer had retained out of the interest due to him, alleging that the said tax was illegal.

The answer of the council, among other matters, sets forth that the stock was duly assessed, and that it was not expressly exemptod from taxation by the ordinance under which it was issued.

The court tried the case without a jury, and found the following facts: 1. That the plaintiff has been, since January, 1870, the holder and owner of $35,262.33 of six per cent stock issued by defendant, the interest thereon payable quarterly. 2. That the plaintiff is not a resident of Charleston, but a resident of

Bonn, Germany. 3. That the defendant owed the plaintiff for interest on his said stock the several sums set forth in the fourth paragraph of the complaint, on the several days therein named, and that it paid the same to him, less certain sums retained. 4. That the several sums so retained by the defendant, amounting in all to $440.75, were by the defendant kept as the amount of taxes due from the said plaintiff to the said city, being a tax at the rate of two per cent per annum upon the principal of said stock, said tax being imposed by virtue of the ordinance of the said city council of Charleston, ratified March 22, 1870, entitled "An ordinance to raise supplies for the fiscal year ending Dec. 31, 1870," and a similar ordinance, ratified March 1, 1871, to raise supplies for the fiscal year ending Dec. 31, 1871, and that said stock was not specifically exempted from taxation by the ordinance under which it was issued. 5. That the plaintiff, by his agent, protested against the deduction of said tax, and duly entered his protest on each receipt for interest on said stock.

The court announced as conclusions of law: 1. That the city council of Charleston, as a municipal corporation, has a right, under the constitution and laws of the State, to tax the property of the plaintiff invested in stock issued by it, said stock not being specifically exempted by law from taxation, nor being exempt from taxation by the ordinance under which it was issued. 2. That the city council of Charleston had a right to collect the tax imposed on the property of the plaintiff in said stock by retaining the amount of such tax out of payments made to the plaintiff on account of the interest due thereon, and the plaintiff cannot recover the same.

Judgment was accordingly rendered, whereupon Murray appealed to the Supreme Court, and in his notice of appeal set forth the following grounds: 1. That plaintiff, being resident in a foreign country, is not liable to the tax levied and retained by the city council. 2. That the laws of the State do not authorize the city council to levy and retain a tax upon its own stock. 3. That the levying and retaining of said tax is a violation of good faith in the contract of loan, and impairs the obligation of said contract, and is, therefore, unconstitutional and void. The Supreme Court affirmed the judgment of the

Court of Common Pleas, and held that the stock was taxable property within the city, and that the right of taxing it "existed at the time of the contract, and so entered into it as to become one of its necessary elements and attributes. The obligation of the contract was not impaired by the imposition of the tax, because it was a property which attached to the contract."

Murray then sued out this writ of error.

Mr. James Conner for the plaintiff in error.

1. This court has jurisdiction. The plaintiff in error, in seeking to reverse the judgment of the Court of Common Pleas, specifically assigned in his notice of appeal that the tax impaired the obligation of his contract with the city. The constitutionality, therefore, of the ordinances levying the tax, which were passed in the exercise of an alleged authority derived from the State, was thus directly drawn in question and necessarily involved; and neither court could have decided adversely to him without affirming their validity.

2. The stock in question, although it be registered and the certificates transferable only on the books of the city, — a provision for the greater security of the holder, — does not differ in its legal effect from an ordinary money-bond. It is a chose in action, attesting his right to demand a specific sum at stated intervals, and the city's correlative obligation to pay it. Having, in this instance, its *situs* at a foreign domicile, it is not subject to the taxing power of Charleston, which is confined to persons and property within the limits of the city. *Railroad Company* v. *Jackson*, 7 Wall. 262; *Tappan* v. *Merchants' National Bank*, 19 id. 490; *State Tax on Foreign-Held Bonds*, 15 id. 300; *The City of Davenport* v. *The Mississippi & Missouri Railroad Co. et al.*, 12 Iowa, 539; *Hunter* v. *Board of Supervisors*, 33 id. 379; *The State* v. *Ross*, 3 Zab. (N. J.) 517; *Collins* v. *Miller*, 43 Ga. 336; *Johnson* v. *City Council of Oregon City*, 3 Oreg. 13.

3. The ordinances impose a tax upon a subsisting contract, and alter its terms by withholding part of the stipulated interest due thereon. They thus impair its obligation. The city cannot, by the exercise of its taxing power, find a justification in morals or in constitutional law for a breach of its contract.

Weston and Others v. *City Council of Charleston*, 2 Pet. 449; 3 Hamilton, Works, 519; *Jelison* v. *Lee et al.*, 3 Woodb. & M. 376.

Mr. Philip Phillips, *Mr. R. B. Carpenter*, and *Mr. James B. Campbell*, *contra*.

1. Murray did not, in the Common Pleas, put his right to recover upon the ground that the ordinances levying the tax, and directing that it be retained from the interest due upon his stock, were in violation of the Constitution of the United States, nor did he invoke the protection of that instrument. When the Supreme Court of a State is asked to reverse the judgment of a subordinate court, error in the record must be shown, and no question can be made on any new matter presented in the appellate court; and, to enable a party here to ask a reversal of a judgment of the Supreme Court, it is not sufficient to show that a Federal question was, by an assignment of error, raised for the first time in that court. *Fisher's Lessee* v. *Cockerell*, 5 Pet. 248.

2. The act of South Carolina granting the charter was in force prior to the adoption of the Federal Constitution, and neither it nor the ordinances passed pursuant to it are subject to the clause which forbids a State to pass a law impairing the obligation of contracts. No jurisdiction, therefore, exists here. *Owings* v. *Speed et al.*, 5 Wheat. 420; *League* v. *De Young*, 11 How. 185. The failure of the State court to give full effect to a contract does not in itself furnish grounds for review. *Knox* v. *Exchange Bank*, 12 Wall. 379.

3. The stock was not exempt from taxation by an ordinance of the city or a law of the State. Neither the decision of the Supreme Court, holding that it was personal property within the city, and that the ordinances imposing the tax were passed in the execution of a power conferred by the charter and justified by its terms, nor the imputed injustice and oppression of the tax, furnish grounds for review here. *Providence Bank* v. *Billings*, 4 Pet. 514; *Mills* v. *St. Clair County*, 8 How. 569; *Satterlee* v. *Mathewson*, 2 Pet. 380; *West River Bridge Company* v. *Dix*, 6 How. 507; *Veazie Bank* v. *Fenno*, 8 Wall. 533. The taxing power of the several States, except where restrained by the Federal or the State Constitution, extends to every species

of property which exists by their authority or is introduced by their permission. *McCullogh* v. *The State of Maryland*, 4 Wheat. 316; *Weston and Others* v. *City Council of Charleston*, 2 Pet. 449; *New Orleans* v. *Clark*, 95 U. S. 644; *Lane County* v. *Oregon*, 7 Wall. 71. Exemption from its exercise can never be claimed by mere implication, but only from clear and express declaration; and if such exemption be a mere gratuity, the act granting it may be modified or repealed in like manner as other legislation. *Tucker* v. *Ferguson*, 22 Wall. 527; *West Wisconsin Railroad Co.* v. *Board of Supervisors of Trempealeau County*, 93 U. S. 595. In this case, there is not even the slightest implication, nor presumption arising from the nature of the contract or otherwise, that the city renounced the right of taxing the stock.

4. Murray insists upon his non-residence. Tangible personal effects and real estate in Charleston are taxed there; and if sound reasons can be given for discriminating in favor of this property, they should be presented to the legislature, as they do not touch the case in its judicial aspects. If a citizen holds certificates of stock which may be taxed, his transfer of them to a non-resident does not create a new obligation, nor exclude the law from operating upon them. The same elements of consideration exist in each case, and the judgment must be the same. In *Catlin* v. *Hull* (21 Vt. 152), debts due to non-residents were taxed. The court said that the doctrine as to the *situs* of personal property did not conflict with the actual jurisdiction over it by the State where it is situated, or with the right to subject it, in common with other property, to share the burden of the government by taxation, and that this had been the settled practice of that State, not only in reference to tangible property, but to that which is incorporeal; and the late Chief Justice Tilghman held that personal property, if invisible (consisting of debts), has a locality in the place where the debtor resides. Story, Contr., sect. 383.

Charleston, in determining that property of this description, created by her authority and situate within her limits, should, without regard to the domicile of the owner, contribute its just share toward the public expenditure, followed a conspicuous example. By sect. 120 of the act of June 30, 1864 (13 Stat.

283), a tax was levied by the United States on the dividends of corporations, without reference to the citizenship of the owner of the stock; and this section was by the act of March 10, 1866, declared to embrace "non-residents, whether citizens or aliens." 14 id. 4. By the act of July 13, 1866, a tax was levied upon the "gains and profits" of any business or trade carried on in the United States by "persons residing without the United States, not citizens thereof." Id. 138.

At all events, Murray's claim that his stock was exempt from taxation by reason of his foreign residence, and that extra-territorial effect was given by the judgment below to a State law does not raise a Federal question.

5. The ordinances are not unconstitutional. When the certificates were issued, the council was vested with power to tax the stock. They were, therefore, purchased with notice that they were subject to the exercise of that power, and they were held in subordination to it. The law touching the liability of the *res* to taxation entered into the contract, and became one of its essential elements. The ordinances do not engraft a new condition upon it, or modify its stipulations. It is said, however, that its obligation is impaired, because, by reason of them, the holder receives a diminished income from it. This is but another form of asserting that a tax cannot be rightfully assessed against the stock; for, if it can, the mode of collecting it is immaterial. Whether, when sued on a contract, the city can claim, by way of set-off, the taxes due to her from the plaintiff; whether she can enforce the collection of them by suit, or by garnishment of moneys due to him, or by a summary sale of the *res*, — are matters of local jurisprudence, which have no more relation to the alleged Federal question involved, or to the real merits of the controversy, than has the proposition that taxes are not debts within the meaning of the legal-tender enactments. If the ordinances are valid without the provision for deducting the tax from the accrued interest and retaining it, they are valid with it.

The right of the States to tax their own securities has been judicially affirmed. *Champaign County Bank* v. *Smith*, 7 Ohio St. 42; *People* v. *Home Insurance Co.*, 29 Cal. 533. There is no reported case in conflict with these decisions. Not only

does this conform to the settled practice of the British government, but the United States has asserted the same right. By sect. 49 of the act of Aug. 5, 1861 (12 Stat. 309), sect. 90 of the act of July, 1862 (id. 473), sect. 116 of the act of June 30, 1864 (13 id. 281), and by sect. 1 of the act of March 3, 1865 (id. 479), the tax on income includes bonds and other securities of the United States.

It is no answer to say that such a tax is not directly laid upon the thing. If it be a breach of contract or of good faith to tax directly, it is equally so to secure the same result by indirect means. That rule is not sound which makes the thing untaxable when it alone is assessed, and taxable when it is included with the rest of the owner's property of every kind

MR. JUSTICE STRONG delivered the opinion of the court.

The plaintiff, a resident of Bonn, in Germany, was, prior to the first day of January, 1870, and he still is, the holder and owner of $35,262.35 of what is called stock of the city of Charleston. The stock is in reality a debt of the city, the evidence of which is certificates, whereby the city promises to pay to the owners thereof the sums of money therein mentioned, together with six per cent interest, payable quarterly. One-third of the interest due the plaintiff on the first days of April, July, and October, 1870, and January and July, 1871, having been retained by the city, this suit was brought to recover the sums so retained; and the answer to the complaint admitted the retention charged, but attempted to justify it under city ordinances of March 20, 1870, and March 21, 1871 By these ordinances, set out in full in the answer, the city appraiser was directed to assess a tax of two cents upon the dollar of the value of all real and personal property in the city of Charleston, for the purpose of meeting the expenses of the city government; and the third section of each ordinance declared that the taxes assessed on city stock should be retained by the city treasurer out of the interest thereon, when the same is due and payable. On these pleadings the case was submitted to the court for trial without a jury; and the court made a special finding of facts, substantially as set forth in the complaint and averred in the answer, upon which judgment

was given for the defendant. This judgment was subsequently affirmed by the Supreme Court, and the record is now before us, brought here by writ of error. It is objected that we have no jurisdiction of the case, because, it is said, no Federal question was raised of record, or decided in the Court of Common Pleas, where the suit was commenced.

The city of Charleston was incorporated in 1783, before the adoption of the Federal Constitution. Among other powers conferred upon the city council was one to "make such assessments on the inhabitants of Charleston, or those who hold taxable property within the same, for the safety, convenience, benefit, and advantage of the city, as shall appear to them expedient." It was under this authority, repeated in subsequent legislation, the city ordinances of 1870 and 1871 were made. It may well be doubted whether the acts of the legislature were intended to empower the city to tax for its own benefit the debts it might owe to its creditors, especially to its non-resident creditors. Debts are not property. A non-resident creditor cannot be said to be, in virtue of a debt due to him, a holder of property within the city; and the city council was authorized to make assessments only upon the inhabitants of Charleston, or those holding taxable property within the same. To that extent the Supreme Court of the State has decided the city has power to assess for taxation. That decision we have no authority to review. But neither the charter itself, nor any subsequent acts of legislation, directly or expressly interfered with any debts due by the city, or gave to the city any power over them. They simply gave limited legislative power to the city council. It was not until the ordinances were passed under the supposed authority of the legislative act that their provisions became the law of the State. It was only when the ordinances assessed a tax upon the city debt, and required a part of it to be withheld from the creditors, that it became the law of the State that such a withholding could be made. The validity of the authority given by the State, as well as the validity of the ordinances themselves, was necessarily before the Court of Common Pleas when this case was tried; and no judgment could have been given for the defendants without determining that the ordinances were laws of the State, not

impairing the obligation of the contracts made by the city with the plaintiff. And when the case was removed into the Supreme Court of the State, that court understood a Federal question to be before it. One of the grounds of the notice of the appeal was "that such a tax is a violation of good faith in the contract of loan, impairs the obligation of said contract, and is, therefore, unconstitutional and void." It is plain, therefore, that both in the Common Pleas and in the Supreme Court of the State a Federal question was presented by the pleadings and was decided, — decided in favor of the State legislation, and against a right the plaintiff claims he has under the Constitution of the United States. The city ordinances were in question on the ground of their repugnancy to the inhibition upon the States to make any law impairing the obligation of contracts; and the decision was in favor of their validity. Nothing else was presented for decision, unless it be the question whether the acts of the State legislature authorized the ordinances; and that was ruled affirmatively. The jurisdiction of this court over the judgments of the highest courts of the States is not to be avoided by the mere absence of express reference to some provision of the Federal Constitution. Wherever rights acknowledged and protected by that instrument are denied or invaded under the shield of State legislation, this court is authorized to interfere. The form and mode in which the Federal question is raised in the State court is of minor importance, if, in fact, it was raised and decided. The act of Congress of 1867 gives jurisdiction to this court over final judgments in the highest courts of a State in suits "where is drawn in question the validity of a statute of, or an authority exercised under, any State, on the ground of their being repugnant to the Constitution, treaties, or laws of the United States, and the decision is in favor of their validity." Not a word is said respecting the mode in which it shall be made to appear that such a question was presented for decision. In the present case, it was necessarily involved, without any formal reference to any clause in the Constitution, and it is difficult to see how any such reference could have been made to appear expressly.

In questions relating to our jurisdiction, undue importance is

often attributed to the inquiry whether the pleadings in the State court expressly assert a right under the Federal Constitution. The true test is not whether the record exhibits an express statement that a Federal question was presented, but whether such a question was decided, and decided adversely to the Federal right. Everywhere in our decisions it has been held that we may review the judgments of a State court when the determination or judgment of that court could not have been given without deciding upon a right or authority claimed to exist under the Constitution, laws, or treaties of the United States, and deciding against that right. Very little importance has been attached to the inquiry whether the Federal question was formally raised. In *Crowell* v. *Randall* (10 Pet. 368), it was laid down, after a review of almost all our previous decisions, "that it is not necessary the question should appear on the record to have been raised, and the decision made in direct and positive terms, *in ipsissimis verbis*, but that it is sufficient if it appears by clear and necessary intendment that the question must have been raised, and must have been decided, in order to have induced the judgment." This case was followed by *Armstrong et al.* v. *The Treasurer of Athens County* (16 id. 281), where it was held sufficient to give this court jurisdiction if it appear from the record of the State court that the Federal question was necessarily involved in the decision, and that the court could not have given the judgment or decree which they passed without deciding it. See also *Bridge Proprietors* v. *The Hoboken Company*, 1 Wall. 116, and *Furman* v. *Nichol*, 8 id. 44.

That involved in the judgment of the Court of Common Pleas and in that of the Supreme Court of the State was a decision that the city ordinances of Charleston were valid, that they did control the contract of the city with the plaintiff, and that they did not impair its obligation, is too plain for argument. The plaintiff complains that the city has not fully performed its contracts according to their terms, that it has paid only four per cent interest instead of six per cent, which it promised to pay, and that it has retained two per cent of the interest for its own use. The city admits all this, but attempts to justify its retention of one-third of what it promised to pay

by pleading its own ordinances directing its officer to withhold the two per cent of the interest promised whenever it became due and payable according to the stipulations of the contract, calling the amount detained a tax. Of course, the question is directly presented whether the ordinances are a justification; whether they can and do relieve the debtor from full compliance with the promise; in other words, whether the ordinances are valid and may lawfully be applied to the contract. The court gave judgment for the defendant, which would have been impossible had it not been held that they have the force of law, notwithstanding the Constitution of the United States, and the Supreme Court affirmed the judgment. Our jurisdiction, therefore, is manifest.

We come, then, to the question whether the ordinances decided by the court to be valid did impair the obligation of the city's contract with the plaintiff. The solution of this question depends upon a correct understanding of what that obligation was. By the certificates of stock, or city loan, held by the plaintiff, the city assumed to pay to him the sum mentioned in them, and to pay six per cent interest in quarterly payments. The obligation undertaken, therefore, was both to pay the interest at the rate specified, and to pay it to the plaintiff. Such was the contract, and such was the whole contract. It contained no reservation or restriction of the duty described. But the city ordinances, if they can have any force, change both the form and effect of the undertaking. They are the language of the promisor. In substance, they say to the creditor: "True, our assumption was to pay to you quarterly a sum of money equal to six per cent per annum on the debt we owe you. Such was our express engagement. But we now lessen our obligation. Instead of paying all the interest to you, we retain a part for ourselves, and substitute the part retained for a part of what we expressly promised you." Thus applying the ordinances to the contract, it becomes a very different thing from what it was when it was made; and the change is effected by legislation, by ordinances of the city, enacted under the asserted authority of laws passed by the legislature. That by such legislation the obligation of the contract is impaired is manifest enough, unless it can be held there was some implied reser-

vation of a right in the creditor to change its terms, a right reserved when the contract was made, — unless some power was withheld, not expressed or disclosed, but which entered into and limited the express undertaking. But how that can be, — how an express contract can contain an implication, or consist with a reservation directly contrary to the words of the instrument, has never yet been discovered.

It has been strenuously argued on behalf of the defendant that the State of South Carolina and the city council of Charleston possessed the power of taxation when the contracts were made, that by the contracts the city did not surrender this power, that, therefore, the contracts were subject to its possible exercise, and that the city ordinances were only an exertion of it. We are told the power of a State to impose taxes upon subjects within its jurisdiction is unlimited (with some few exceptions), and that it extends to every thing that exists by its authority or is introduced by its permission. Hence it is inferred that the contracts of the city of Charleston were made with reference to this power, and in subordination to it.

All this may be admitted, but it does not meet the case of the defendant. We do not question the existence of a State power to levy taxes as claimed, nor the subordination of contracts to it, so far as it is unrestrained by constitutional limitation. But the power is not without limits, and one of its limitations is found in the clause of the Federal Constitution, that no State shall pass a law impairing the obligation of contracts. A change of the expressed stipulations of a contract, or a relief of a debtor from strict and literal compliance with its requirements, can no more be effected by an exertion of the taxing power than it can be by the exertion of any other power of a State legislature. The constitutional provision against impairing contract obligations is a limitation upon the taxing power, as well as upon all legislation, whatever form it may assume. Indeed, attempted State taxation is the mode most frequently adopted to affect contracts contrary to the constitutional inhibition. It most frequently calls for the exercise of our supervisory power. It may, then, safely be affirmed that no State, by virtue of its taxing power, can say to

a debtor, "You need not pay to your creditor all of what you have promised to him. You may satisfy your duty to him by retaining a part for yourself, or for some municipality, or for the State treasury." Much less can a city say, "We will tax our debt to you, and in virtue of the tax withhold a part for our own use."

What, then, is meant by the doctrine that contracts are made with reference to the taxing power resident in the State, and in subordination to it? Is it meant that when a person lends money to a State, or to a municipal division of the State having the power of taxation, there is in the contract a tacit reservation of a right in the debtor to raise contributions out of the money promised to be paid before payment? That cannot be, because if it could, the contract (in the language of Alexander Hamilton) would "involve two contradictory things: an obligation to do, and a right not to do; an obligation to pay a certain sum, and a right to retain it in the shape of a tax. It is against the rules, both of law and of reason, to admit by implication in the construction of a contract a principle which goes in destruction of it." The truth is, States and cities, when they borrow money and contract to repay it with interest, are not acting as sovereignties. They come down to the level of ordinary individuals. Their contracts have the same meaning as that of similar contracts between private persons. Hence, instead of there being in the undertaking of a State or city to pay, a reservation of a sovereign right to withhold payment, the contract should be regarded as an assurance that such a right will not be exercised. A promise to pay, with a reserved right to deny or change the effect of the promise, is an absurdity.

Is, then, property, which consists in the promise of a State, or of a municipality of a State, beyond the reach of taxation? We do not affirm that it is. A State may undoubtedly tax any of its creditors within its jurisdiction for the debt due to him, and regulate the amount of the tax by the rate of interest the debt bears, if its promise be left unchanged. A tax thus laid impairs no obligation assumed. It leaves the contract untouched. But until payment of the debt or interest has been made, as stipulated, we think no act of State sovereignty can work an exoneration from what has been promised to the

creditor; namely, payment to him, without a violation of the Constitution. "The true rule of every case of property founded on contract with the government is this: It must first be reduced into possession, and then it will become subject, in common with other similar property, to the right of the government to raise contributions upon it. It may be said that the government may fulfil this principle by paying the interest with one hand, and taking back the amount of the tax with the other. But to this the answer is, that, to comply truly with the rule, the tax must be upon all the money of the community, not upon the particular portion of it which is paid to the public creditors, and it ought besides to be so regulated as not to include a lien of the tax upon the fund. The creditor should be no otherwise acted upon than as every other possessor of money; and, consequently, the money he receives from the public can then only be a fit subject of taxation when it is entirely separated" (from the contract), "and thrown undistinguished into the common mass." 3 Hamilton, Works, 514 *et seq.* Thus only can contracts with the State be allowed to have the same meaning as all other similar contracts have.

Such limitations of the power of State taxation we have heretofore recognized. We have held property in one stage of its ownership not to be taxable, and in a succeeding stage to be taxable. Those decisions are not without some analogy to the rule we have mentioned. Thus, in *Brown* v. *Maryland* (12 Wheat. 419–441), where it was held that a State tax could not be levied, by the requisition of a license, upon importers of merchandise by the bale or package, or upon other persons selling the goods imported by the bale or package, Mr. Chief Justice Marshall, considering both the prohibition upon States against taxing imports, and their general power to tax persons and property, said: "Where the importer has so acted upon the thing imported that it has become incorporated and mixed up with the mass of property in the country, it has, perhaps, lost its distinctive character as an import, and has become subject to the taxing power of the State." *Vide* also *Woodruff* v. *Parham*, 8 Wall. 123; State Tax on Railway Gross Receipts, 15 id. 284. A tax on income derived from contracts, if it does not prevent the receipt of the income, cannot be said

to vary or lessen the debtor's obligation imposed by the contracts.

In opposition to the conclusion we have reached we are referred to *Champaign County Bank* v. *Smith* (7 Ohio St. 42), and *People* v. *Home Insurance Co.* (29 Cal. 533), in which it is said the power of a State to tax its own bonds was sustained. We do not, however, regard those cases as in conflict with the opinion we now hold; and, if they were, they would not control our judgment when we are called upon to determine the meaning and extent of the Federal Constitution. In the former, it appeared that the tax collected was in virtue of an assessment of State bonds belonging to the bank, but deposited with the auditor of State as security for the circulating notes of the company. The tax thus assessed having been carried into the duplicate, the collector seized and appropriated the bank-notes and money of the bank, and suit was brought to recover the amount so taken. In sustaining a demurrer to the petition, the court held, it is true, that a State has power to tax its own bonds equally with other property, and that the exercise of such a power involves no violation of a contract. But it was not held that the State could collect the tax by withholding from the creditor any part of what the State had assumed to pay. The tax was laid not upon the debt, but upon the creditor; and it was collected not out of what the State owed, but out of the general property of the bank. Neither by the assessment nor in the collection was there any interference with the contract. In *People* v. *Home Insurance Company*, the question was whether bonds of the State of California, belonging to a New York insurance company, but deposited and kept in the State, as required by an act to tax and regulate foreign insurance companies doing business in the State, were assessable for taxation there. It was ruled that they were. This case, no more than the former, meets the question we have before us. It certainly does not hold that a State or a city, by virtue of its taxing power, can convert its undertaking to pay a debt bearing six per cent interest into one bearing only four.

These are the only cases cited to us as directly sustaining the judgment we have now in view. How far short of sustaining it they are must be apparent. And we know of none that

are more in point. It seems incredible that there can be any, for, as we said in *Railroad Company* v. *Pennsylvania* (15 Wall. 300), "the law which requires the treasurer of the company (indebted) to retain five per cent of the interest due to the non-resident bondholder is not . . . a legitimate exercise of the taxing power. It is a law which interferes between the company and the bondholder, and, under the pretence of levying a tax, commands the company to withhold a portion of the stipulated interest and pay it over to the State. It is a law which thus impairs the obligation of the contract between the parties. The obligation of a contract depends upon its terms and the means which the law in existence at the time affords for its enforcement. A law which alters the terms of a contract, by imposing new conditions, or dispensing with those expressed, is a law which impairs its obligation; for such a law . . . relieves the parties from the moral duty of performing the original stipulations of the contract, and it prevents their legal enforcement." This was said, it is true, in a case where the question was, whether a tax thus imposed upon a non-resident holder of bonds issued by a company chartered by the State was warranted by the Constitution. But, so far as it speaks of what constitutes impairing the contract obligation, it is applicable, in its fullest extent, to all legislation affecting contracts, no matter who may be the parties.

We do not care now to enter upon the consideration of the question whether a State can tax a debt due by one of its citizens or municipalities to a non-resident creditor, or whether it has any jurisdiction over such a creditor, or over the credit he owns. Such a discussion is not necessary, and it may be doubtful whether the question is presented to us by this record.

It is enough for the present case that we hold, as we do, that no municipality of a State can, by its own ordinances, under the guise of taxation, relieve itself from performing to the letter all that it has expressly promised to its creditors.

There is no more important provision in the Federal Constitution than the one which prohibits States from passing laws impairing the obligation of contracts, and it is one of the highest duties of this court to take care the prohibition shall neither be evaded nor frittered away. Complete effect must be given

to it in all its spirit. The inviolability of contracts, and the duty of performing them, as made, are foundations of all well-ordered society, and to prevent the removal or disturbance of these foundations was one of the great objects for which the Constitution was framed.

The judgment of the Supreme Court of South Carolina will be reversed, and the record remitted with instructions to proceed in accordance with this opinion; and it is

So ordered.

MR. JUSTICE MILLER, with whom concurred MR. JUSTICE HUNT, dissenting.

I am of opinion that the power of taxation found in the charter of the city of Charleston, long before the contract was made which is here sued on, entered, like all other laws, into the contract, and became a part of it. In other words, the contract was made subject to this power of taxation by the city of Charleston, as found in her charter from 1781 to the present time.

The imposition and collection of this tax cannot, therefore, impair the obligation of a contract which was made subject to her right to exercise that power. I therefore dissent.

NOTE. — In *Jenkins* v. *Charleston*, error to the Supreme Court of the State of South Carolina, which was argued by *Mr. A. G. Magrath* and *Mr. James Lowndes* for the plaintiff in error, and by the same counsel for the defendant in error as was the preceding case, MR. JUSTICE STRONG, in delivering the opinion of the court, remarked: This case is like *Murray* v. *Charleston*, and is governed by the decision there made.

The judgment of the Supreme Court of the State will be reversed, and the record remitted with instructions to proceed in accordance with this opinion; and it is

So ordered.

MR. JUSTICE MILLER and MR. JUSTICE HUNT dissented.

RAILROAD COMPANY v. VANCE.

A railroad corporation of Indiana, by a written contract of lease with a railroad corporation of Illinois, acquired the right and assumed the duty of managing and carrying on the business of the main line and a branch road of the latter company. The lease was confirmed by an act of the legislature of Illinois, which declared that said lessee should be a railroad corporation in the latter State, and possess as large powers as were possessed by the lessor, and such other powers as are usual to railroad corporations. The State board for the equalization of taxes in Illinois made an assessment on the capital stock and franchises of the lessor corporation, over and above its tangible property, for the roads which passed from its control by virtue of the lease, and then assigned to the several counties so much of the assessment as was in the same proportion to the whole as the length of track within their respective limits bore to the entire length of the leased roads; the taxes due upon such assessment being charged to and to be collected from the company which, with the consent of the State, was entitled to have, and did have, exclusive control and management of such roads. *Held*, that the mode adopted by the State board was in substantial conformity to the laws of Illinois.

APPEAL from the Circuit Court of the United States for the Southern District of Illinois.

The facts are stated in the opinion of the court.

Mr. Joseph E. McDonald and *Mr. R. P. Ranney* for the appellant.

Mr. James K. Edsall, Attorney-General of Illinois, *contra*.

MR. JUSTICE HARLAN delivered the opinion of the court.

Upon the filing of the bill in this case by the Indianapolis and St. Louis Railroad Company, suing as a corporation organized under the laws of Indiana, against sundry county tax-collectors in the State of Illinois, a temporary injunction was granted, restraining the defendants from levying on the property, or taking any steps to collect taxes upon the capital stock, of the complainant, for the years 1873, 1874, and 1875, under or by virtue of any warrants in their hands for that purpose.

The defendants, denying that there had been any assessment upon the capital stock of the complainant, insisted that the taxes in question were due upon assessments, rightfully made by the State board of equalization of Illinois upon the capital

stock and franchises of an Illinois corporation, the St. Louis, Alton, and Terre Haute Railroad Company, over and above its tangible property, for so much of its main line and the Alton branch thereof as were leased to, and operated in Illinois by, the Indianapolis and St. Louis Railroad Company, to whom, defendants claimed, the taxes in question were, therefore, properly charged.

The cause, by agreement of parties, was submitted upon the pleadings and exhibits filed; and, upon final hearing, a decree was rendered dissolving the injunction and dismissing the bill.

From that decree this appeal is prosecuted.

The essential facts in the case are these: The Constitution of Illinois requires the General Assembly of that State to provide such revenue as may be needful by levying a tax by valuation, so that every person and corporation shall pay a tax in proportion to the value of his, her, or its property, — such valuation to be ascertained by some person or persons to be elected or appointed in such manner as the General Assembly shall direct. Persons or corporations owning or using franchises and privileges are to be taxed in such manner as the General Assembly shall from time to time direct, the tax, however, to be uniform as to the class upon which it operates.

In pursuance of the Constitution, the General Assembly, in the year 1872, passed a general revenue law providing for the assessment of property, and prescribing the mode for the collection of taxes. It contained specific directions for the assessment of the different kinds of property owned by railroad companies, their visible or tangible property to be assessed under the heads of "railroad track," "rolling-stock," &c. In reference to their capital stock, the statute provided that the "capital stock of all companies and associations" (other than banking associations organized under the general laws of the State) "now or hereafter created under the laws of this State shall be so valued by the State board of equalization, as to ascertain and determine respectively the fair cash value of such capital stock, including the franchises, over and above the assessed value of the tangible property of such company or association," — that value to be ascertained under such rules and principles as the board might deem equitable and just.

The rule adopted by the State board was this: To the market or fair cash value of the shares of capital stock add the market or fair cash value of the debt of the corporation, (excluding that created for current expenses), and from this amount deduct the aggregate amount of the equalized or assessed valuation, as ascertained by the board, of all the tangible property of the corporation; the amount remaining to be taken as the fair cash value of the capital stock, including the franchise, which the board is required to assess against such corporation.

At the annual meetings of the State board held in each of the years 1873, 1874, and 1875, for the purpose of examining the abstracts of property assessed for taxation in the several counties, as returned to the auditor of State, and for the purpose, also, of equalizing assessments, the question arose as to the mode in which the capital stock of the St. Louis, Alton, and Terre Haute Railroad Company should be assessed for taxation.

The difficulties which attended an intelligent discharge of that duty will be comprehended by a statement of the relations of that corporation to the complainant.

On the 11th of September, 1867, the complainant, by a written contract of lease with the St. Louis, Alton, and Terre Haute Railroad Company, acquired the right and assumed the duty of managing and carrying on, for the term of ninety-nine years, commencing June 1, 1867, the business of the principal or main line of the latter, one hundred and eighty-nine miles in length, extending from Terre Haute, Ind., to East St. Louis, Ill., and also of the Alton branch, four miles in length, subject to certain prescribed terms and conditions.

The tenth article of the lease is as follows: —

"The said party of the first part (the complainant), its successors and assigns, shall and will, at all times during the term aforesaid, pay or cause to be paid any and all taxes, assessments, and imposts of whatever kind which shall or may at any time during such term be charged, levied, assessed, or imposed upon the said main line of said railroad and the said Alton branch thereof, or upon either or any part of either of the said railroads or their appurtenances, or upon any business or transactions done upon them or either of

them, or upon any income arising therefrom, or upon any property whatsoever, the use of which during said term is hereby agreed to be furnished to the party of the first part, or which may be charged against or imposed upon the said party of the second part (the St. Louis, Alton, and Terre Haute Railroad Company), its successors or assigns, for or on account of its or their ownership of said railroads, or either or any part of either thereof, or of such property or any part thereof: *Provided, however*, that nothing in this contract contained shall be so construed as to render the party of the first part in any way liable for the tax specifically upon the income of the holders of the bonds or stocks of the party of the second part."

Under this lease the complainant took possession of all the property connected with or essential to the business of the principal line and the Alton branch of the lessor.

Some doubt having been expressed as to the validity of the lease under the laws of Illinois, an act of the General Assembly of that State, approved March 11, 1869, directs that the lease "be and stand confirmed according to the terms" thereof; and the second section provides: —

"The said lessees, their associates, successors, and assigns, shall be a railroad corporation in this State, under the said style of 'The Indianapolis and St. Louis Railroad Company,' and shall possess the same or as large powers as are possessed by said lessor corporation, and such other powers as are usual to railroad corporations. Said Indianapolis and St. Louis Railroad Company may, and are hereby authorized to, extend said line of road from any point on the same between the cities of Pana and Litchfield, on said road, or from either of said points westward to the Mississippi River opposite Louisiana, or any point below, not exceeding fifteen (15) miles, in the State of Missouri, with a branch thereof to the city of Quincy, in the State of Illinois, and the same to connect with the railroad bridge over said river at said city of Quincy."

At its annual meetings, in 1873, 1874, and 1875, the State board made assessments upon the capital stock and franchises of the various railroad companies of the State over and above their tangible property respectively. Having ascertained the fair cash taxable value of the capital stock, including the franchise of the St. Louis, Alton, and Terre Haute Railroad Company, without any reference to the lease made by the latter, it

fixed the sums of $2,918,184, $1,125,139, and $1,004,416 as the proportion of such valuation which should be distributed for the years 1873, 1874, and 1875, respectively, to the counties on the line of the leased railroads, assigning to each county, in conformity to the rule prescribed by the statute, such proportion of those annual assessments as the length of line in such county bore to the entire length of the leased railroads in the State. The assessments thus distributed to the several counties through which the leased railroads passed were charged to the Indianapolis and St. Louis Railroad Company. The balance of the assessment upon the capital stock and franchise was distributed to the counties upon the lines which the St. Louis, Alton, and Terre Haute Railroad Company operated, and were charged directly against it.

While the officers of State deny that the assessments were upon the capital stock of the Indianapolis and St. Louis Railroad Company, they evidently intend that the warrants based upon those assessments shall be levied upon such of the leased property as by the laws of Illinois can be seized for the payment of taxes against corporations created under the laws of that State.

Whether the assessments made by the State board, and the intended levy by the county collectors of the warrants in their hands, are in accordance with the laws of Illinois, are the fundamental questions in this case.

In support of the negative of these propositions, the counsel for the complainant insist that the Indianapolis and St. Louis Railroad Company is a corporation created by the laws of Indiana, with stock subscribed and held under the authority of that State, and with an organization there and not elsewhere; that neither before nor after the passage of the act of March 11, 1869, did the stockholders or officers of the Indianapolis and St. Louis Railroad Company organize, subscribe for stock, elect officers, or do any other act to become a corporation under its provisions; that no capital stock of the corporation referred to in that act was ever subscribed by the lessee therein referred to, and that the complainant owns no capital stock except that owned by it as a corporation existing under the laws of Indiana; that the act of March 11, 1869, construed in reference to its objects intended to be attained, and the constitutional powers

of the General Assembly of Illinois, did not make the Indianapolis and St. Louis Railroad Company a corporation of that State, but amounts only to a license to an Indiana corporation to exert its corporate powers in Illinois, by holding and operating a line of leased railroads within her limits; that the State board had no authority to assess the capital stock and franchise of an Indiana corporation; and that the property managed and controlled by the latter, whether acquired prior to or held under the lease of 1867, could not be seized to pay taxes due upon any assessment of the capital stock of the St. Louis, Alton, and Terre Haute Railroad Company.

These propositions, presenting, it must be conceded, questions of some difficulty, will be noticed in the progress of this opinion.

There can be no doubt that the Illinois revenue statute of 1872 was intended to meet the provisions of the State Constitution, which required such legislation as would subject to taxation, according to its value, every kind of property, whether owned by individuals or corporations. It was not supposed that the constitutional duty imposed upon the General Assembly would be discharged by taxing simply the tangible property of railroad companies. Hence a tax was imposed upon their capital stock, including the franchise, over and above their tangible property. "Capital stock," within the meaning of the Illinois statute, does not mean shares of stock, but "the aggregate capital of the company;" which includes "the value of the right to use this tangible property in a special manner, for purposes of gain." We so held in *State Railroad Tax Cases* (92 U. S. 575), where the provisions of this revenue statute were critically examined. It is to be observed in this connection that the State board of equalization was not authorized to assess the capital stock of companies or associations managing property or engaging in business in Illinois, unless they were created under the laws of that State. Such seems to be the settled construction of that statute by the Supreme Court of Illinois. In *Western Union Telegraph Company* v. *Leib* (76 Ill. 172) this language is held: "We are unable to find any authority in the act for assessing the capital stock of companies or associations doing business in the State, but incorporated under the laws of another State.

The care manifested by the legislature, whenever any allusion is made to the assessment of capital stock, to limit it to corporations created by or under the laws of the State, is so clear and positive, that no doubt can exist as to the purpose intended."

When the lease of 1867 was executed, the capital stock, including the franchise, of the lessor corporation was taxable over and above its tangible property, assessed under the head of railroad track, &c. But, upon the execution of that lease, and its confirmation by the State, that corporation no longer enjoyed the right to use the leased property in a special manner for the purposes of gain. That right for a fixed period, and with the declared consent of the State, passed to the lessee corporation, and became thereafter a part of its aggregate capital, not reached by taxation upon its tangible property operated in Illinois, but assessable only under the head of capital stock and franchise. The taxable value of the capital stock and franchise of the lessor was diminished by the amount which the State board should ascertain to be the value of that right. By the confirmation of the lease, according to its terms,—among which was the obligation of the lessee to pay all taxes, assessments, and imposts, of whatever kind, charged against or imposed upon the lessor for or on account of its ownership of the leased lines,—the State was estopped from collecting, as against the lessor, any taxes assessed upon that right. This, in our opinion, is a fair construction of the lease, and the act of March 11, 1869.

The question whether the State can require any other corporation to respond to the taxation, which, but for the lease and the act of March 11, 1869, would have been assessable against and collectible from the St. Louis, Alton, and Terre Haute Railroad Company, depends for its solution altogether upon the construction to be given to that act.

Upon the theory of complainant's counsel, the State of Illinois cannot make the leased property liable to these assessments upon capital stock and franchise under any form of assessment, since, as they claim, that property is managed and operated by a corporation deriving its existence from, and holding its stock and maintaining its organization under, the laws of Indiana, and not under the laws of Illinois.

In this view we cannot concur. That act was something

more than a mere license to an Indiana corporation to exert its corporate powers and enjoy its corporate rights and privileges in another State. Such would undoubtedly have been the case had the act closed with the first section, as it would have done, had the General Assembly intended nothing more than to confer upon the corporation of another State authority to extend its operations by carrying on railroad business in Illinois. We cannot thus restrict the effect of the act, without disregarding wholly the ordinary meaning of the plain words of its second section, which declares that the lessees, their associates, successors, and assigns, shall be a railroad corporation in the State of Illinois. It does more: it gives the style by which that corporation shall be known. Still further, it does not authorize the complainant corporation to exercise, in Illinois, the corporate powers granted by the laws of Indiana; but confers, by affirmative language, upon the corporation, which it declares shall be a railroad corporation in Illinois, "the same or as large powers as are possessed" by an Illinois corporation, the St. Louis, Alton, and Terre Haute Railroad Company, and, in addition, such other powers as are usual to railroad corporations. The Indianapolis and St. Louis Railroad Company, as lessee of the St. Louis, Alton, and Terre Haute Railroad Company, was thus created, by apt words, a corporation in Illinois. The fact that it bears the same name as that given to the company incorporated by Indiana cannot change the fact that it is a distinct corporation, having a separate existence derived from the legislation of another State. After the passage of the act of March 11, 1869, the property described in the lease of 1867 became, at least for purposes of taxation in Illinois, that of the corporation created by that act as a railroad corporation in that State.

But it may be suggested that the utmost which can be claimed for the act is, that, without creating a new corporation in Illinois, it only made the complainant, as an Indiana corporation, a corporation of the State of Illinois. It was clearly competent for the General Assembly to have done this, as held in *Railroad Company* v. *Harris* (12 Wall. 65), where the court said: "Nor do we see any reason why one State may not make a corporation of another State, as there organized and conducted a

corporation of its own, *quo ad* any property within its territorial jurisdiction." But we do not see how this view gives any support to the position of the complainant. For, had the act, after confirming the lease of 1867, declared in terms that the lessee corporation, as organized and conducted in Indiana, should be deemed a corporation of Illinois, we should have felt bound to hold that, as to the property obtained by and operated under the lease within that State, it was, in the sense of the Illinois revenue statute of 1872, a corporation "created under the laws" of that State, subject to taxation upon its capital stock, including its franchise, so far as such stock and franchise were fairly represented by the leased property.

Railroad Company v. *Harris* (*supra*) is relied upon by counsel, as sustaining their construction of the act of 1869; but there is no substantial analogy between that case and this. The Virginia act did not purport to make the Maryland corporation a corporation of Virginia, nor did it contain any language from which could be inferred a purpose to create thereby a new and distinct corporation in Virginia. On the contrary, the Illinois act of 1869 declares, in express terms, that certain parties shall be a railroad corporation in that State, under a designated name, with authority to exercise, not the powers which had been granted by the State of Indiana to another corporation of the same name, created under the laws of that State, but the same powers which were possessed by a corporation theretofore created under the laws of Illinois. We are unable to perceive any conflict between the views expressed in that case and those announced in this opinion.

Some stress is laid upon the fact that there was no formal subscription to the capital stock, or any formal organization of the corporation created by the act of March 11, 1869. Notwithstanding the absence of such subscription and organization, we are of opinion that the State board had the right, for the purposes of taxation, to regard the corporation authorized by that act to exercise the powers of the lessor corporation, as a corporation created under the laws of Illinois.

There is still another objection earnestly urged against this construction of the act of March 11, 1869. It is said that, being a special act, and containing nothing to show that the corpora-

tion therein named might not have been organized under the general laws of Illinois, the act cannot be construed as creating a new corporation, without bringing it into conflict with the following clause of the Illinois Constitution of 1848, then in force; viz., "Corporations not possessing banking powers or privileges may be formed under general laws, but shall not be created by special acts, except for municipal purposes, and in cases where, in the judgment of the General Assembly, the objects of the corporation cannot be attained under general laws."

The argument is, that a special act creating a corporation is in violation of that constitutional provision, unless it appears affirmatively from the act, or from the recorded proceedings of the General Assembly, that the latter was of opinion that the objects of the corporation could not be attained under the general laws. In the absence of any decision upon this question by the Supreme Court of Illinois, we should give weight to this argument. But this precise point was made in the case of *Johnson* v. *Joliet & Chicago Railroad Co.*, 23 Ill. 207. In that case, it appears that a special act creating a railroad company, passed in 1855, contained no statement of the inability of the General Assembly to accomplish the objects of the incorporation under the general law. The court said: "It is too late now to make this objection, since, by the action of the General Assembly under this clause, special acts have been so long the order of the day, and the ruling passion of every legislature which has been convened under the Constitution, until their acts of this description fill a huge and misshapen volume, and important and valuable rights claimed under them. The clause has been wholly disregarded, and it would now produce far-spread ruin to declare such acts unconstitutional and void. It is now safer, and more just to all parties, to declare that it must be understood that, in the opinion of the General Assembly, at the time of passing the special act, its objects could not be attained under the general law; and this without any recital by way of preamble."

That decision furnishes an answer to the objection under consideration.

We come now to the examination of the mode in which the

assessments were made. Looking into the proceedings of the State board, so far as they have been laid before us, we meet with some difficulty in understanding the precise theory upon which the assessments of 1873, 1874, and 1875 were made. But for the lease made in 1867, the way of the board would have been free from all embarrassment. The assessment, in that event, would have been upon the capital stock, including the franchise, of the St. Louis, Alton, and Terre Haute Railroad Company, over and above any tangible property it owned and operated. But, as heretofore shown, after the confirmation of the lease, the capital stock and franchise of that corporation were diminished in value to whatever extent their taxable value was represented by the leased lines of railroad. Technically, the assessment under the head of capital stock and franchise should have been upon the capital stock and franchise of the corporation created by the act of March 11, 1869. But that corporation had no defined amount of capital stock separate from that of the Indiana corporation of the same name. The State board, therefore, made an assessment upon the capital stock of the lessor corporation, for that portion of the lines of railroad which passed from its control in virtue of the lease of 1867, and then distributed such assessment among the various counties on the lines of the leased railroads, in the proportion that the extent of track in the respective counties bore to the whole length of the leased lines in the State; the taxes due upon such assessment being charged to and to be collected from the Indianapolis and St. Louis Railroad Company, which, with the consent of the State of Illinois, as expressed in the act of March 11, 1869, was entitled to have, and did have, exclusive control and management of such leased lines.

The mode thus adopted by the State board was, as we think, in substantial conformity to the laws of Illinois, and affords the complainant no just ground of objection.

The complainant sues as a corporation, created by the laws of Indiana, upon the ground that the assessment was upon its capital stock, and that the purpose of the county collectors was to seize its property. But the State officers deny that any assessment was made, or intended to be made, upon its capital stock. Clearly, the county collectors have no right to levy the

warrants in their hands upon any property which belongs to the Indiana corporation, as distinguished from the Illinois corporation of the same name. But they have the right, for the reasons heretofore given, to subject to the payment of the taxes in question the property which the corporation, created by the act of 1869, is operating and managing in that State, as lessee of the St. Louis, Alton, and Terre Haute Railroad Company. The assessment made by the State board is, in every just sense, an assessment upon the capital stock and franchise of an Illinois corporation; to wit, the Indianapolis and St. Louis Railroad Company, lessee under and by authority of the act of March 11, 1869, of the St. Louis, Alton, and Terre Haute Railroad Company.

We perceive no error in the decree to the prejudice of the complainant.

Decree affirmed.

MR. JUSTICE FIELD and MR. JUSTICE HUNT did not hear the argument in this case, nor participate in the decision

---

THE "LADY PIKE."

1. This court will consider, on a second appeal, only the proceedings subsequent to its mandate. The re-examination cannot extend to any thing decided on the first appeal.
2. Where a stipulation to abide and answer the decree of a district court in a case in admiralty is, with the consent of the parties, substituted for the stipulation previously filed by a claimant, it thereby becomes the only stipulation for value, and does not become inoperative upon an appeal to the Circuit Court. The appeal carries up the whole fund.

APPEAL from the Circuit Court of the United States for the Eastern District of Wisconsin.

This is an appeal from the decree of the court below in the execution of the mandate of this court in *The Lady Pike* (21 Wall. 1), where the former decree was reversed, and the cause remanded for further proceedings in conformity with the opinion.

The facts are stated and the assignment of errors set out in the opinion of the court.

Mr. James H. Davidson, for the appellants, cited the following authorities in support of the respective assignments of error: —

First assignment: *Lane* v. *Townsend*, 1 Ware, 289; *The Ship Empire and Cargo*, 1 Ben. 19; *The Union*, 4 Blatchf. 90; *The White Squall*, id. 103; *Carroll et al.* v. *The Steamboat T. P. Leathers*, Newb. Adm. 432; *Gaines* v. *Travis*, 1 Abb. Adm. 297. Second assignment: *The White Squall*, *supra*. Third assignment: *Whitwell et al.* v. *Burnside*, 1 Metc. (Mass.) 39; *Morgan* v. *Morgan*, 4 Gill & J. (Md.) 395; *McCluskey* v. *Cromwell*, 11 N. Y. 593; *Sawyer* v. *Oakman*, 11 Blatchf. 65; *Miller* v. *Stewart*, 9 Wheat. 681; *Smith* v. *United States*, 2 Wall. 219; *Leggett et al.* v. *Humphreys*, 21 How. 66; *United States* v. *Boyd et al.*, 15 Pet. 187; *United States* v. *Boecker*, 21 Wall. 652; *Smith* v. *Huesman*, Cent. Law Jour., Dec. 7, 1877, No. 23, p. 492; *The Ann Caroline*, 2 Wall. 538; *The Harriet*, 1 Rob. Adm. 183; *Myres et al.* v. *Parker*, 6 Ohio St. 501. Fourth assignment: *Carpentier* v. *Minturn*, 65 Barb. (N. Y.) 293, and authorities there cited; *Allen* v. *Malcolm*, 12 Abb. (N. Y.) Pr. 335; *Mahaney* v. *Penman*, 4 Duer (N.Y.), 603; *Shields* v. *Thomas*, 18 How. 253; *Watson* v. *The Cabot Bank*, 5 Sandf. (N. Y.) 423; *Murray* v. *Vanderbilt*, 39 Barb. (N. Y.) 148. Fifth assignment: *McGovney* v. *The State of Ohio*, 20 Ohio, 83; *Grant* v. *Naylor*, 4 Cranch, 224.

The court declined to hear counsel for the appellees.

MR. JUSTICE CLIFFORD delivered the opinion of the court.

Second appeals will lie in certain cases, where it is alleged that the mandate of the appellate court has not been properly executed; but the appeal in such a case will bring up nothing for re-examination except the proceedings subsequent to the mandate. Needful explanations may be derived from the original record; but the re-examination cannot extend to any thing that was decided in the antecedent appeal. *Sibbald* v. *United States*, 12 Pet. 488; *Santa Maria*, 10 Wheat. 431; *Roberts* v. *Cooper*, 20 How. 466.

Wheat to a large amount had been delivered by the shipper

to the steamer named in the record, to be transported from the port of shipment down the river to the port of destination. Pursuant to usage, the wheat was stored in a barge connected with the steamer; and the barge, with two others similarly laden. was taken in tow by the steamer, which furnished the motive power for the whole craft. Prior to the commencement of the voyage, the owner of the wheat insured the same; and during the trip down the river the barge containing the wheat collided with a bridge-pier in the river and was sunk, and the barge with her cargo became a total loss.

Contest arising as to who was responsible, the insurance companies paid the loss, and filed a libel against the steamer and the barge containing the wheat, upon the ground that the loss was occasioned by the fault of those in charge of the motive-power. Service was made by attaching the steamer; and certain other proceedings took place not necessary now to be noticed, except to say that an appearance was entered, and that the steamer was discharged upon a stipulation for value. Proofs were taken; and the District Court, after hearing the parties, entered a decree dismissing the libel. Hearing was again had in the Circuit Court on appeal, and the Circuit Court entered a decree affirming the decree of the District Court. Prompt appeal was then taken by the libellants to this court, where the decree of the Circuit Court was reversed with costs, and the case remanded with directions to enter a decree for the libellants, and for further proceedings to be had therein, in conformity with the opinion of this court. *The Lady Pike*, 21 Wall. 1.

Due record of the mandate having been made, and execution for the costs of this court having been issued, the Circuit Court sent the cause to a master, to ascertain and report the amount the libellants were entitled to recover. Without unnecessary delay, the master made his report, which was subsequently duly confirmed; and the Circuit Court entered a final decree, in pursuance of the mandate of this court, that the libellants do have and recover of the claimants, Ephraim G. Pearce and William Knight, and William F. Davidson and Peyton S. Davidson, their stipulators, the sum of $13,190.40, the amount reported by the master, with costs of suit. Whereupon Christopher G. Pearce,

William Knight, William F. Davidson, and Peyton S. Davidson appealed to this court, which is the second appeal in the case now under consideration; and they assign for error the following causes, in substance and effect: 1. That the Circuit Court erred in not entering a final decree against Henry Lourey, as owner of the steamer, and his stipulator in the stipulation which he as claimant filed for the value of the steamer. 2. That the Circuit Court erred in entering the final decree against the parties therein named as exhibited in the record. 3. That the Circuit Court erred in entering the decree against the parties named in the decree, because their stipulation only bound them to abide and answer the decree of the District Court. 4. That the Circuit Court erred in not entering a final decree against the claimants of the barge. 5. That the Circuit Court erred in entering a final decree against Ephraim G. Pearce.

Two of the errors assigned, to wit, the first and the second, may conveniently be considered together, as they involve very largely the same considerations.

Notices in due form to all persons claiming to own the steamer were regularly posted by the marshal at the same time that he attached the steamer under the monition of the District Court; and the record of that court shows that Henry Lourey appeared in the same court as claimant, and gave a stipulation with surety in the sum of $10,000, conditioned that the claimant should abide and answer the decree of the court where the stipulation was given. Counsel subsequently appeared, and on his motion the time was extended to file an answer.

Delay ensued; and on the 2d of February following, Christopher G. Pearce, William W. Hanley, and William Knight, owners of the steamer, &c., intervened for their interest, and filed their answer and claim. Their claim was limited to the steamer; but the Western Union Railroad Company intervened at the same time as owners of the barge, and joined in the same answer and claim.

Six days later, it was ordered by the court, on motion of the proctor for the claimants, that the stipulation filed at that time, in the sum of $16,000, be substituted for and be in lieu of the

stipulation previously filed, and that the one previously filed be returned to the surety on the same.

Suffice it to say, without copying the instrument, that Ephraim G. Pearce and William Knight are therein described as the claimants of the steamer; and William F. Davidson and Peyton S. Davidson bind themselves, their heirs, executors, and administrators, in the sum of $16,000, unto the libellants, that they shall abide and answer the decree of the said court in the aforesaid cause.

Substituted as the instrument was for the prior one, which was given as a stipulation for value, it unquestionably became the operative, and the only operative, stipulation for value. Both parties concede that the prior stipulation was a stipulation for value, and that it was all the security the libellants had for compensation in case they prevailed in the suit. Power to change one stipulation for another, where the parties consent, is clearly vested in the District Court in such a case; and, inasmuch as the substitution was made in this case on motion of the proctor of the claimants, it surely does not lie with them to interpose any such objection, certainly not at this stage of the litigation.

Nor is it necessary to inquire whether the libellants might or might not have objected at the time, as it is clear that no such objection would be of any avail in an appellate court if not made in the court of original jurisdiction. Through their proctor, the present claimants moved that the stipulation in question be substituted for the one previously filed; and the court made the order in pursuance of the motion of their proctor, and it was in accordance with the same motion that the prior stipulation was surrendered to the surety who gave it; and, if the theory of the claimants must prevail, the libellants are without any security whatever, as the vessel was discharged from attachment when the first stipulation for value was filed.

Viewed in the light of these suggestions, it is clear that the first and second assignments of error must be overruled.

2. Nor is there any greater merit in the third assignment of error, which assumes that the stipulation became inoperative when the case was appealed to the Circuit Court. Instead of that, the rule is universal that an appeal from the District

Court to the Circuit Court carries up the whole fund, which in this case consisted only of the stipulation for value and the appeal bond, as the record does not show that any stipulation for costs was given in the District Court. Where the appeal is from the Circuit Court to this court, the fund remains in the custody of the Circuit Court; but the mandate of the Supreme Court is sent down, and there operates upon the fund sent up from the District Court, just the same as if the execution had been issued there without any appeal to this court, which is sufficient to show that the third assignment of error cannot be sustained.

3. Service was not made upon the barge, and, of course, there could not be any final decree against her owners, which is all that need be said in response to the fourth assignment of error.

4. Other defences failing, it is insisted that the court erred in entering a decree against Ephraim G. Pearce, which it is understood means that the decree should have been against the appellant, Christopher G. Pearce, and not against the person who signed the stipulation. During the argument, it seemed to be conceded that there is no such person as Ephraim G. Pearce; that it is merely a mistake as to the Christian name, made by the attorney who affixed the appellant's name to the stipulation; and, if so, it is quite too late for the party to interpose that objection on a second appeal in this court, in a case where no excuse is shown for not having taken steps to have the correction made in the court where his attorney made it. Nothing of the kind was suggested when the cause was here before, and nothing appears to warrant the conclusion that the attention of the District or Circuit Court was called to it before the first appeal.

Decree affirmed.

CASEY v. CAVAROC.

1. Possession is of the essence of a pledge; and, without it, no privilege can exist as against third persons.
2. This doctrine is in accordance with both the common and the civil law, the Code Napoleon (art. 2076), and the Civil Code of Louisiana (art. 3162).
3. The thing pledged may be in the temporary possession of the pledgor as special bailee, without defeating the legal possession of the pledgee; but where it has never been out of the pledgor's actual possession, and has always been subject to his disposal by way of collection, sale, substitution, or exchange, no pledge or privilege exists as against third persons.
4. Though in such a case the pledgee, by a real action against the pledgor or his heirs, may, under the law of Louisiana, recover possession of the thing, he cannot sustain a privilege thereon as against creditors, or against a bank receiver, or an assignee in bankruptcy, who represents them.
5. Equity will not regard a thing as done which has not been done, when it would injure third parties who have sustained detriment and acquired rights by what has been done.
6. Where it was agreed that a bank should deposit bills and notes with its president and his partner, by way of pledge to secure a loan made by a third party, and the president delivers them back to the bank officers for collection, with power to substitute other securities therefor, it is not such a delivery and possession as is necessary to create a privilege by the law of Louisiana.

APPEAL from the Circuit Court of the United States for the District of Louisiana.

The National New Orleans Banking Association, an organization formed under the National Banking Act of 1864, failed and suspended payment on the 4th of October, 1873, and on the 27th of that month was placed in the hands of a receiver, under the fiftieth section of the act. At or about the time of the failure, Charles Cavaroc, the president of the bank, took therefrom certain bills and notes to the amount of $325,011.26, and delivered the same to his firm of C. Cavaroc & Son, who claimed to hold them as agents for the Société de Crédit Mobilier of Paris, by way of pledge to secure said society for certain acceptances of bills drawn by the bank in July previous. The bill in this case was filed by the receiver to recover possession of said securities, alleging that they were delivered by the bank to Cavaroc & Son, in contemplation of the insolvency of the bank, not by way of pledge, but with a view to give a preference to Cavaroc & Son and the Credit Mobilier over other creditors of the bank,

contrary to the provisions of the fifty-second section of the banking act. The defendants, Cavaroc & Son and the Credit Mobilier, by their several answers, deny that the securities were delivered by way of preference in contemplation of the insolvency of the bank, and insist that they were actually pledged to the society by virtue of a distinct agreement, as a consideration and security for the acceptance by it of bills drawn by the bank to the amount of one million francs; which bills were drawn in pursuance of said agreement, and were negotiated by the bank for over $218,000, and were duly accepted by the society upon the faith of the pledged securities. The answers aver that at the time of this transaction the bank was in good credit and standing.

The parties having gone into proofs, the following facts were shown: —

From May, 1873, until the time of its failure the bank was in a weak financial condition, and constantly becoming weaker. The cashier testified that on the 31st of May it had hardly any funds to meet current checks, whilst the amount due to depositors was $680,775. A deposit of $25,000 was opportunely made by a customer on that day; but the president, Cavaroc, was so apprehensive of immediate suspension, that he refused to let it be used, telling the paying teller that if any thing should happen, he did not want the depositor to lose this money. By getting temporary relief from the other banks of the city, and from the New Orleans Insurance Association, and other large loans, it kept its doors open until the 4th of October, though, in connection with most of the other banks of New Orleans, it ceased, from and after the 24th of September, to pay cash, except for very small amounts, paying only in clearing-house certificates, which it obtained by depositing collaterals with the trustees of the clearing-house. Although it held notes and bills receivable amounting to about a million of dollars, a large portion of these were comparatively worthless, being either protested or renewed at maturity, and the makers constantly failing; and all of them, of any value, being pledged, or agreed to be pledged, for its various loans. Although this condition of the bank was not generally known, and presumably unknown to the Credit Mobilier, yet suspicion

of its solvency began to be entertained by many of the business men of New Orleans as early as June or July, and its stock became almost totally unsalable in the market.

In the early part of July, 1873, Charles Cavaroc, Jr., a member of the New Orleans firm of C. Cavaroc & Son, being in Paris on behalf of the New Orleans National Banking Association, entered into negotiation with the Credit Mobilier for procuring the acceptance of the latter for the accommodation of the bank; and, on the 11th and 12th of July, the said negotiation was concluded in the form of a letter addressed by Cavaroc to the society, and of an answer thereto by the latter. The following are the material parts of this correspondence. Cavaroc, in his letter dated July 11, 1873, says: —

"The verbal agreements entered into between us relative to this operation can, we think, be thus resumed: —

"'In order to benefit by the difference in the rates of exchange between the summer months and end of the year, time when the large shipments commence, the Society of the Credit Mobilier authorizes the New Orleans National Banking Association to draw upon it, and binds itself to accept these drafts at ninety days, up to 1,000,000 francs.

"'The drafts made under these conditions shall be renewable under the same conditions, but it is expressly specified that, ten days before maturity, the Society of the Credit Mobilier shall be covered by Mr. Cavaroc, president, to the amount of the payments to be made.

"'The funds realized from these emissions shall be used by the bank against guaranties and securities of the first class, which shall be deposited by the bank with the firm of Messrs. Cavaroc & Son, which shall be the depository thereof, and advise the Credit Mobilier of such deposit.

"'The bank shall guarantee the investment of these sums, and the interest shall be carried to the credit of the joint account, at the rate of seven per cent per annum.

"'This account shall in no manner allow any commission or privileged charge on either side, — there shall figure only brokerage, stamps, and divers charges, really and honestly incurred by either side.

"'The accounts shall be stated at the closing of each operation.

"'Profit and loss shall be equally divided between the Credit Mobilier and the New Orleans National Banking Association.'"

The answer of the society, dated on the 12th of July, 1873, repeats this contract, and accepts its terms.

During the negotiation, on the 11th of July, Cavaroc and the Credit Mobilier, respectively, despatched the following successive telegrams to the bank in New Orleans: —

1. "Bank exchange one million, ninety days' sight, Société de Crédit Mobilier, giving best securities deposited with house.

(Signed) "CAVAROC."

2. "Defer drawing, the agreement is not yet completed.

(Signed) "CREDIT MOBILIER."

3. "Draw bank one million, ninety days' sight, Credit Mobilier accepting our guarantee.

(Signed) "CAVAROC."

In pursuance of these advices, on the 12th of July the bank drew its bills on the Credit Mobilier to the aggregate amount of one million francs, and negotiated them through Schuchardt & Co., of New York, realizing therefrom $218,454.34. The bills were accepted by the society in due course, and were afterwards paid by it, no funds being provided by the bank for that purpose.

The answers allege that in this transaction Cavaroc & Son acted as the agents of both parties. The answers further allege that the securities in question were delivered by the bank to Cavaroc & Son, for the Credit Mobilier, in pursuance of the agreement; that a portion thereof, to the nominal amount of $220,021.41, a list of which is contained in a schedule annexed to the answer of the society, marked "Exhibit B," were delivered on the day the drafts were drawn, to wit, July 12, 1873; and that these not being deemed sufficient, another deposit, representing about $100,000, was made a few days afterwards; that some portion of these securities coming to maturity and being paid, Cavaroc & Son allowed the bank to receive the cash paid thereon, upon other securities being given equal thereto, in lieu thereof.

It was proved that the securities were delivered, or pretended to be delivered, as stated; but the evidence as to the time and manner of the delivery, and the manner in which

the securities were afterwards treated, presented serious questions for the consideration of the court. It was evident that the identical securities specified in "Exhibit B" could not have been delivered as early as the 12th of July, because they were dated and discounted after that day, and "Exhibit B" itself was not made out until the nineteenth day of August. There was some evidence that securities to the amount of this schedule had been delivered to Cavaroc & Son at or soon after the twelfth day of July, and that those named in the exhibit had been substituted for them as they severally became due, and were renewed, or paid, as stated in the answer. The other securities, amounting to about $100,000, could not have been added until after Aug. 19, when "Exhibit B" was made out, or they would have been included therein. This list, contained in "Exhibit B," was made out for the purpose of being transmitted to the Credit Mobilier. A letter from C. Cavaroc & Son to the society, bearing date Aug. 19, 1873, was exhibited in evidence, with which, as Cavaroc, Sen., testified, a copy of the list "Exhibit B" was forwarded to the society. It contained the following passage:—

"If we have not sent you, at first, the memorandum of the valuables we have received from the bank, to guarantee our house and yourselves, it is because the subsequent despatch of our son gave us to understand that the operation was made under our guaranty, and we had ourselves taken these valuables. But we think it more just that we should not only transfer you this deposit, but that we should give you the details of these notes, which are all of the first class.

"As soon as certain of them will mature, we will take care to replace them by others, and will advise you."

A letter from the society to the bank, dated Sept. 5, acknowledges the receipt of this letter of Cavaroc & Son, in the following terms:—

"By their letter of the 19th of the same month, Messrs. Cavaroc & Son, of your city, have sent us the memoranda of the valuables which you deposited with them to secure your drafts on us. Said valuables amount together to $220,021.41, which is well."

Precisely when the additional $100,000 of securities were added to the first lot does not appear; but Charles Cavaroc, the president of the bank, testified that it was a few days after the delivery of the latter.

But a more serious question related to the manner in which the securities were delivered and disposed of. The evidence on this point was to the following effect: Charles Cavaroc, Sen., the president of the bank, acting as agent of both parties, directed the discount clerk of the bank, who had charge of its portfolio of notes and bills discounted, to select the securities for the Credit Mobilier. They were selected accordingly to the amount of $220,021.41, and placed in an envelope by themselves, and handed to Mr. Cavaroc, for Cavaroc & Son. He handed them to the cashier of the bank for safe-keeping. But, as some of the securities soon matured, they had to be taken out of the envelope for collection; and Cavaroc had them collected, or renewed, in the usual manner by the discount clerk. The trouble of going to the cashier whenever a note became due, to get it out of the envelope, after a few days induced a change, and the securities were handed back to the discount clerk, in the envelope, in order that he might more conveniently attend to their collection and renewal. When any of them were paid, the money was taken and used by the bank, and other notes were substituted in their place. When renewed, the new note took the place of the old. On one occasion, quite a large amount of the notes was exchanged for others, because more available in some other transaction of the bank. The entire lot, however, subject to this exchange of individual securities, appears to have been kept in the envelope by itself. In this manner the notes were kept in the bank until its failure on the 4th of October, when Mr. Cavaroc took possession of the package, and thereafter it was kept in the office of his firm. At the same time, the indorsement of the bank was placed on the several securities, which had not been done before. Lists of the securities contained in the envelope had been made out from time to time, — the last being made on the 4th of October, when they were finally removed from the bank. A copy of this list is annexed to the Credit Mobilier's answer as "Exhibit C."

No entry was made on the books of the bank of this transaction with the Credit Mobilier, except that the bills drawn on it were duly entered amongst bills payable; and the Credit Mobilier was credited with the amount, which was put down amongst the liabilities of the bank, and so appeared in all the monthly statements, beginning with the 1st of August. The pledge of securities was not noticed. These all remained on the portfolio of bills discounted, as before, and their amount continued to be represented in the daily and monthly statements, without any note or memorandum to show that they had been pledged. So far as the public, and those with whom the bank dealt, could perceive, the bank continued to have possession and control of all the securities in its own right, and they all appeared to be equally liable with the other assets to the claims of all the creditors.

The Circuit Court rendered a decree dismissing the bill of complaint, and from that decree the receiver appealed.

Mr. Thomas Allen Clarke in support of the decree.

1. The pledge is valid, and, being of negotiable paper, no other formality than delivery is required. Act of La., 1852, p. 15, sect. 1; re-enacted 1855, p. 348; Rev. Civil Code, 3158; Rev. Stat., sect. 2905. The effect of revisory legislation is stated with clearness in *State* v. *Holmes*, 11 La. Ann. 439, *State* v. *Brewer*, 22 id. 273, and *State* v. *McCort*, 23 id. 326.

From these decisions, it follows that the provisions of the Revised Statutes of 1870 retained in force sect. 2905, in reference to the limitation of formalities in pledges of negotiable instruments, notwithstanding the Revised Code of the same year contained the provisions of the old code alongside of the amendment of 1852. One article of the Code requires certain formalities, 3160; the other article, 3158, dispenses with them, and the Revised Code contains the dispensing article. So neither an act before a notary, nor an indorsement by the pledgor, is required to constitute a valid pledge.

2. Informalities in a pledge cannot enable the pledgor to impeach it, *Partee, Syndic*, v. *Corning*, 9 La. Ann. 539; *Brother* v. *Saul*, 11 id. 225; although they may be required as against third persons, *Matthews* v. *Rutherford*, 7 id. 225.

3. The syndic, receiver, or assignee of a debtor has no

greater authority than the debtor, except as the statute provides. *Partee, Syndic*, v. *Corning*, 9 La. Ann. 539; *Gibson* v. *Warden*, 14 Wall. 244; *Cook* v. *Tullis*, 18 id. 332; *Mitford* v. *Mitford*, 9 Ves. Jr. 86.

Assignees in bankruptcy are subject to the same equities affecting the bankrupt's rights which could have been enforced against him. *Grant* v. *Mills*, 2 Ves. & Bea. 308; *Ex parte Hanson*, 12 Ves. 349; *Turner* v. *Harvey*, Jacob, 174; *Campbell* v. *Slidell*, 5 La. Ann. 274; *Gibson* v. *Warden*, 14 Wall. 244; *Yeatman* v. *Savings Institution*, 95 U. S. 764.

4. It is lawful to constitute the pledgor an agent to collect the negotiable instruments pledged, and to replace those collected by others, or to change the securities. *Clark, Assignee*, v. *Iselin*, 21 Wall. 360; *White* v. *Platt*, 5 Den. (N. Y.) 269.

5. Sect. 52 of the statutes of 1864 measures the power of setting aside transfers, &c., at the instance of a receiver. This case has none of the elements prescribed. The interdiction of that section has the same purpose as that of sect. 35 of the Bankrupt Act, and operates on sales or pledges or transfers for a fraudulent object, not on those with an honest purpose.

Two things must concur to bring the transaction within the inhibitions of the law: the fraudulent design of the bankrupt, and the knowledge of it upon the part of the transferee. *Tiffany* v. *Lucas*, 15 Wall. 410; *Wager* v. *Hall*, 16 id. 584; *Wilson* v. *City Bank*, 17 id. 473; *Cook* v. *Tullis*, 18 id. 332; *Mays* v. *Fritton*, 20 id. 414.

Advances may be made in good faith to a debtor to carry on his business, no matter what his condition may be, and the party making these advances can lawfully take securities at the time for their repayment. *Tiffany* v. *Boatman's Institution*, 18 Wall. 376; *Mays* v. *Fritton*, 20 id. 414; *Clark* v. *Iselin*, 21 id. 360; *Watson* v. *Taylor*, id. 378; *Burnhisel* v. *Firman*, 22 id. 170; *Sawyer* v. *Turpin, &c.*, 91 U. S. 114; *Jerome* v. *McCarter*, 94 id. 734.

6. The fact that the senior member of the firm of Cavaroc & Son was president of the bank is immaterial, for he acted as stakeholder in his individual capacity. The contract was between the Credit Mobilier and the bank. In holding the

pledge, the Cavarocs, like all stakeholders, were agents of both parties. There was no inconsistency in this position arising from the fact that one of the partners was president of the bank. He did not stand as contracting on both sides. He said to the bank and to the Credit Mobilier, distinct persons from himself, I will hold these stakes. He made the contract not with himself, but with two other parties.

7. The contract was made with the authority of the corporation, through its board of directors; and the institution, having received the benefit of the loan, cannot avoid its liability by denying the authority of those who contracted in its behalf. *Ottawa Plank Road* v. *Murry*, 19 Ill. 336; *Bissell* v. *Michigan Southern & Northern Indiana Railroad Co.*, 22 N. Y. 258; *Township of Pine Grove* v. *Tulcott*, 19 Wall. 666; *Bank of the United States* v. *Dandridge*, 12 Wheat. 64; *Bezou* v. *Pike*, 23 La. Ann. 788.

8. The contract was within the ordinary action of banks and bankers, and not in contravention of the policy or the provisions of the banking act.

Mr. J. D. Rouse and *Mr. Charles Case, contra.*

MR. JUSTICE BRADLEY, after stating the case, delivered the opinion of the court.

The substance of the agreement in this case, so far as necessary to be considered, was, that the Credit Mobilier should accept the drafts of the banking association to the amount of a million of francs at ninety days, the bank agreeing to furnish funds to pay the drafts at maturity, with the privilege of a renewal; and it was stipulated that this obligation of the bank should be guaranteed by Cavaroc & Co., and by a deposit with them, for the use of the Credit Mobilier, of first-class securities, of which deposit the latter was to be advised.

This arrangement was immediately telegraphed to New Orleans, and the drafts were drawn on the 12th of July; but the weight of the evidence is, that none of the collateral securities were delivered until the 19th of August, — which might raise a question whether the accommodation acceptances of the Credit Mobilier could be considered as a contemporary consideration therefor; or, if not, whether the bank was at that time,

in the apprehension of Cavaroc (the common agent), in a condition of solvency and good credit, — as to which an affirmative answer could not well be given, since the proof is quite clear that the bank was then struggling with serious financial difficulties, from which it never recovered.

Waiving this question, however, for the present, we will proceed to examine whether, supposing that no objection arises from the time when this transaction took place, it amounted to such a transfer or pledge of the securities in question as to entitle the Credit Mobilier to a preference upon them over the other creditors of the bank at the time of its failure. Was there such a delivery and retention of possession of the collateral securities as to constitute a valid pledge by the law of Louisiana? Clearly they were never out of the possession of the officers of the bank, and were never out of the bank for a single moment, but were always subject to its disposal in any manner whatever, whether by collection, renewal, substitution, or exchange; and collections, when made, were made for the benefit of the bank, and not that of the Credit Mobilier.

The case has some features in common with, though differing in others from, that of *Clarke* v. *Iselin* (21 Wall. 360), in which this court held that collateral securities transferred by the borrower to the lender at the time of the loan were not divested out of the latter by the mere fact of his depositing them with the borrower for collection. The court say: "Obviously this deposit in no degree affected the title of the defendants to the notes. It merely facilitated collections." The court then cited *White* v. *Platt*, a New York case in 5 Denio, 269, in which it was said: "Where promissory notes are pledged by a debtor to secure a debt, the pledgee acquires a special property in them. That property is not lost by their being redelivered to the pledgor to enable him to collect them, the principal debt being still unpaid. Money which he may collect upon them is the specific property of the creditor. It is deemed collected by the debtor in a fiduciary capacity."

The case of *Clarke* v. *Iselin*, being a New York case, and governed by New York law, or the common law as understood in New York, the authority cited was necessarily of great

weight, if not controlling. When, as in that case, the title has been transferred to the creditor, and the collections are made for his benefit, the pledgor merely acting as his servant or agent in making them, the character of the security is not affected at the common law by the debtor having actual possession of the collaterals, there being no fraud in the transaction. In such case, they are held by the creditor by way of mortgage as well as pledge; and a mortgage is valid notwithstanding the mortgagor has the possession. The difference ordinarily recognized between a mortgage and a pledge is, that title is transferred by the former, and possession by the latter. Indeed, possession may be considered as of the very essence of a pledge (Pothier, Nantissement, 8); and if possession be once given up, the pledge, as such, is extinguished. The possession need not be actual: it may be constructive; as where the key of a warehouse containing the goods pledged is delivered, or a bill of lading is assigned. In such case, the act done will be considered as a token, standing for actual delivery of the goods. It puts the property under the power and control of the creditor. In some cases, such constructive delivery cannot be effected without doing what amounts to a transfer of the property also. The assignment of a bill of lading is of that kind. Such an assignment is necessary, where a pledge is proposed, in order to give the constructive possession required to constitute a pledge; and yet it formally transfers the title also. In such a case, there is a union of two distinct forms of security, — that of mortgage and that of pledge; mortgage by virtue of the title, and pledge by virtue of the possession.

This advantage exists when notes and bills are transferred to a creditor by way of collateral security. His possession of them gives them the character of a pledge. Their indorsement if payable to order, or their delivery if payable to bearer, gives him the title also, which is something more than a pledge. This double title existed in *White* v. *Platt* and in *Clarke* v. *Iselin*. Hence the actual possession of the securities by the creditor was a matter of less importance in those cases.

Whether constructive possession in the creditor can be affirmed, where an article to which his only title is that of pledge is actually re-delivered to the debtor, with general

authority to dispose of it and substitute another article of equal value in its place, is the question which we have to meet in this case. Such a redelivery for a mere temporary purpose, as for shoeing a horse which has been pledged and is owned by the farrier, or for repairing a carriage which has been pledged and is owned by the carriage-maker, does not amount to an interruption of the pledgee's possession. The owner is but a mere special bailee for the creditor. So, when the debtor is employed in the creditor's service, his temporary use of the pledged article in the creditor's business does not effect a restoration of the possession to the debtor. This is in accordance both with the common and the civil law. *Reeves* v. *Capper* (5 Bing. N. C. 136) was a case of this kind. A sea-captain pledged his chronometer for a debt. He was afterwards employed by the pledgee as master of one of his ships, and the chronometer was placed in his charge, to be used on the voyage. It was held that the possession of the pledgee was not lost. He recovered the chronometer against a person to whom the master pledged it a second time.

In *Hays* v. *Riddle* (1 Sandf. (N. Y.) 248), the plaintiff delivered to the defendant, at his request, a convertible bond of the New York and Erie Railroad Company (which had been pledged by the latter to the former), in order to get it exchanged for stock of the same company, which stock was to be returned and substituted for the bond in pledge. The defendant never returned either the bond or the stock. The plaintiff brought an action of trover against him for the bond, and recovered its value, being less than the debt for which it was pledged. It being objected that by delivering back the bond to the pledgor the plaintiff had lost his special property in it as pledgee, the court said: "At common law, as a general rule, the positive delivery back of the possession of the thing, with the consent of the pledgee, terminates his title. 2 Pick. 607; 15 Mass. 389. If the thing, however, is delivered back to the owner for a temporary purpose only, and it is agreed to be redelivered by him, the pledgee may recover it against the owner, if he refuse to restore it to the pledgee, after the purpose is fulfilled. 2 Taunt. 266; Story on Bailm., sect. 299. So, if it be delivered back to the owner in a new character; as, for example, as

a special bailee or agent. In such case, the pledgee will still be entitled to the pledge, not only as against the owner, but also as against third persons. 14 Pick. 497."

In *Macomber* v. *Parker* (14 Pick. (Mass.) 497), referred to in the last case, the proprietors of a brickyard contracted it out on shares to a brickmaker, agreeing to advance the money requisite to carry on the manufacture of bricks, and, after being repaid their advances, to divide the profits with the latter. It was agreed that the bricks, as fast as made, should be pledged to the owners of the yard as security for their advances; but the brickmaker was to keep them in his charge, and sell them at retail, and as often as he got the amount of a hundred dollars from the sales he was to deposit it in bank to the credit of the owners. The bricks were afterwards attached as to the share of the maker for his debts. But the court held that the owners of the yard had not, by leaving the bricks in the hands of the maker, lost their lien as pledgees of the entire property. They remark: "To say that this limited authority to sell the bricks by retail, in small sums, on account of the plaintiffs, was a waiver of their possession of the residue that remained in the kilns in their yard, would be clearly against the intent and meaning of the parties, unreasonable, and unwarranted by the evidence." Again: "The special authority given by the plaintiffs to Evans [the brickmaker] was to clothe him with the character of agent to a limited extent only, and no remission to him, in his character of pledgor, of the plaintiffs' right to retain the bricks according to the agreement." To the objection that retention of possession by the pledgor would have the effect to deceive those dealing with him, the court said: "If the vendor or the pledgor should have the actual possession of the property after it were pledged or sold, it would only be *prima facie*, but not conclusive, evidence of fraud. The matter might be explained and proved to be for the vendee or pledgee. It is a most familiar principle, that one man may have the actual possession or custody, while another has the legal title and the constructive possession."

In this case, it will be observed, the pledgees were joint owners of the brick, and were owners of the premises on which the bricks were kept; and the decision was undoubtedly cor-

rect. But, in the general remarks made by the court, there is manifest, as in many other cases, a tendency to confound the distinction between cases in which the title is in the creditor, and those in which his whole interest depends on possession. All the cases cited, however, show that a bailment to the pledgor for a mere temporary purpose for the use of the pledgee, or for the repair and conservation of the pledge, will not destroy the latter's possession; at the same time, they imply that a redelivery to the pledgor, except for the special and temporary purposes indicated, divests the possession of the pledgee, and destroys the pledge.

The civil law, which is more particularly our guide in the present case, is to the same general effect; though it is more careful in denouncing the danger of losing the right of pledge by parting with any thing like permanent or continued possession to the pledgor; and it preserves very clearly the distinction between pledge and hypothecation, or mortgage. The old civil law of the Digest, it is true, was more indulgent, and permitted the pledge to be delivered to the pledgor without prejudice to the security, in a manner that would not be allowed at the present day. Thus, in book xiii. of the Digest, title vii., law 35, Modestinus says: "A pledge transfers only the possession to the creditor, the property remaining in the debtor; yet the debtor may have the use of it, either as a gratuity, or for hire." And Paulus, in the same title, law 37, says: "If I lend a pledge to the owner thereof, I retain possession by means of the loan; for before the debtor borrowed it, the possession was not in him; and when he borrowed it, it was my intention still to retain the possession, and it was not his to acquire it." Pothier's Pandects, vol. vii. p. 360.

As to this law of the Digest, Mr. Bell, in his Commentaries on the Scotch Law, remarks as follows: "Voet very justly observes, in criticising this law, that to permit such practices were to endanger the safety of other creditors, and to sanction a fraud upon the rule which requires possession to complete a real right to movables; and that no true analogy can hold between the law of Rome, where hypothecs without possession were admitted, and the laws of modern commercial nations, in which the rule is established that possession preserves property.

It is true," Bell continues, "that, in the course of many contracts, there is a necessity for separating property and possession; and that the mere circumstance of goods being in the hands of another on a temporary contract will not deprive the real proprietor of his right, in favor of the creditors of the temporary possessor. And there seems to be no doubt that the right of a pledgee will also be sufficiently strong to support this temporary dereliction of possession, in the course of necessary operations on it; the manufacturer, or other holder, being custodier for the pledgee, without injury to the real security. But the doctrine delivered by Voet is sound, where the possession is given up without necessity to the owner of the goods." 2 Bell, Com. (7th ed.), p. 22.

The modern French law, governed by a similar policy, has been put into a very explicit form in the Civil Code, which has been followed in the Civil Code of Louisiana. A quotation of some of the principal articles, bearing on this subject, will show the care taken to require distinct possession in the pledgee.

Art. 3158 (Rev. Civ. Code La.), relating to movables, is as follows: "This privilege" [namely, that of pledge] "shall take place against third persons, only in case the pawn is proved by an act made either in a public form, or under private signature: *Provided*, that in this last case it should be duly registered in the office of a notary-public at a time not suspicious: *Provided also*, that, whatever may be the form of the act, it mentions the amount of the debt as well as the species and nature of the thing given in pledge, or has a statement annexed thereto of its number, weight, and measure." This article is copied from art. 2074 of the Code Napoleon.

As to negotiable securities, the Louisiana Code, by art. 3161, provided that a regular transfer by indorsement should be sufficient. But by a subsequent act, passed in 1852, and re-enacted March 15, 1855, it was provided "that where a debtor wishes to pawn promissory notes, bills of exchange, stocks, obligations, or claims upon other persons, he shall deliver to the creditors the notes, bills of exchange, certificates of stock, or other evidences of the claims or rights so pawned; and such pawn so made, without further formalities, shall be valid as well against third persons as against the pledgors thereof, if made in good

faith." A question was made on the argument whether this statute was in force in 1873, when the transaction in question took place. Without giving our reasons at present, it is sufficient to say that we are satisfied that the act was in force at that time.

The next article, 3162, which is not affected by the statute, and which is copied from art. 2076 of the Code Napoleon, is important, and is in these words: "In no case does this privilege subsist in the pledge except when the thing pledged, if it be a corporeal movable, or the evidence of the debt, if it be a note or other obligation under private signature, has been actually put and remained in the possession of the creditor, or of a third person agreed on by the parties."

As might be supposed, this article has formed the subject of much discussion by the commentators. Troplong says: "The pledgee has this privilege only on the condition of being possessed of the thing. This condition was expressly imposed upon him by art. 181 of the Custom of Paris. This is reproduced by art. 2102, No. 2, of the Code Civil, and we shall specially discuss it in the commentary on art. 2076. Possession is indispensable to him. It withdraws the thing from the hands of the debtor and from the actions of creditors, and sets it aside in a privileged situation. '*Possidentis melior est conditio.*' Possession is the most sure foundation, and the most striking index of his privilege. Without it, the creditor would have no ground for escaping the law of contribution. Casaregis says, 'Preference is accorded to a pledgee on the thing pledged, because he has it in his own hands.'

"This possession ought to be certain and not equivocal. If it is ambiguous, if the things pledged have been so placed as to deceive the other creditors, and to lead them to believe that the debtor always continued the possessor, the pledge would be endangered."

Troplong shows, however, that this possession may be a civil possession, as where the delivery is made by the transfer of a bill of lading of goods on board a ship, &c. Troplong, Nantissement, arts. 97–99.

The same author, in commenting on art. 2076, after treating of the absolute necessity of possession by the pledgee, in order

to constitute the relation of pledge, and after discussing the different forms of possession, actual and constructive, adapted to the nature and situation of the thing pledged, proceeds (Nantissement, No. 309) to treat of the manner in which it may be in the hands of the pledgor without destroying the possession and right of the pledgee. He says: "Though the merchandise be deposited in the creditor's storehouse, it may still need the care of the debtor. Then it is not forbidden to stipulate that he shall continue to attend to it in the interest of the creditor. The important thing is, that this clause does not cover a fraud. Aside from this, the possession of the creditor is not incompatible with a certain co-operation of the debtor,—being for the conservation of the thing,—he still being the owner. The creditor does not any the less continue exclusive possessor of the thing. The debtor is none the less dispossessed of it." He then gives some cases by way of illustration. For example:—

In 1839, Morin & Co., of Beaune, pledged to Weiland & Co., of Baden, sixty thousand bottles of sparkling Burgundy, for a debt. The wine was delivered to an agent of Weiland & Co., and deposited in a vault hired by him for the purpose. It was agreed that Morin & Co. should give the wine all necessary care. in presence of the agent, who was to keep the keys of the vault. But, to facilitate matters, it sometimes happened that the agent gave the keys to Morin & Co.; and once, in 1840, the latter removed some of the bottles of wine to their own premises. Morin & Co. having failed, their assignees (syndics) insisted that the pledge was null and void, because the debtors were not dispossessed of the wine. But Weiland & Co. having renounced their privilege on the wines which had been removed, were sustained by the highest court in their claim to the remainder. It was held that the special character of the wine, and the difficulty of finding persons qualified to take proper care of it, were sufficient reasons for employing Morin & Co. to attend to it; and the agent's allowing them to take the keys occasionally for this purpose was a mere matter of convenience, to facilitate the operations of the workmen. Troplong, Nant., No. 311; Dalloz, Repertoire, vol. xxxii. p. 455, art. Nantissement. See also Duranton, vol. xviii. Nos. 525, 528, 531.

A different result was had in another case, where certain Champagne wines were the object of the pledge, and the debtor had reserved the care of them; and, though the vaults in which they were stored were leased to the creditors, they communicated by open doors with the other vaults of the debtors, where their workmen were employed on the wines, and there was nothing to indicate which were pledged, and which were not, and nothing to prevent a substitution thereof; so that the debtors appeared in possession, and kept up their credit thereby, which they could not otherwise have done. Troplong, No. 312; *Ricou et al.* v. *Syndics of Joly & Co.*, Dalloz, Repertoire, Nantissement, No. 93, note.

In another case, it was decided that the debtor might be permitted to make sales of the goods pledged, provided that they remained in the pledgee's possession, and could not be delivered to the purchaser without his consent. Dalloz, No. 129.

Troplong deduces, from these and other cases, the general conclusion that, whenever the assistance of the debtor is necessary to the better accomplishment of the object of the pledge, it ought to be permitted, provided always that it does not disturb the possession of the creditor in any respect. Nant., No. 313. Dalloz says: "It is evident that if the pledge of movables could, without a delivery, have effect in regard to third persons, it would be the source of great frauds and deceptions. When the debtor is obliged to surrender possession he cannot deceive third parties dealing with him by keeping possession of the pledged articles as part of his estate, and getting credit thereby." He takes special notice of the decision that a pledge is not valid if the dispossession of the debtor is not sufficiently complete to prevent substitution; or if there is a mere contract for a pledge, and not an actual pledge. Dalloz, Rep. Nant. 119. And he lays down the principle, that though a contract for a pledge may be enforced against the pledgor and his heirs (Nant., No. 121), yet that, by the very words of the Code, he cannot set up the privilege of the pledge, which alone constitutes his right as against third persons, without actual possession, or its equivalent. Nant. 119, 209.

From these authorities it seems to be evident that, in the French law at least, the text of which, in this regard, is the

same as that of Louisiana, a delivery by the owner of securities by way of pledge, followed by a return thereof to him, for the purpose of enabling him to collect them and apply the money to his own use, on substituting others in their stead, and with general liberty of substitution, and to appear as the owner and possessor thereof in his dealings with others (the title of the securities not being transferred to the creditor), is not such a delivery of possession as is necessary to establish the privilege due to a pledge as to third persons. It would be contrary to the very letter of the law to allow such a transaction to have that effect. It would not be mere evidence of fraud, which might be rebutted by counter evidence; but it would be contrary to the rule of law adopted to prevent fraud. In other words, as to third persons, it would not be a pledge at all within the meaning and requirements of the law.

We think that the decisions in Louisiana lead to the same conclusion. In the case of *Geddes* v. *Bennett* (6 La. Ann. 516), the object of the pledge was certain barrels of whiskey in the warehouse of a third person. The creditor allowed the debtor to remove them to his own premises, upon giving the following receipt: "Received from J. & R. Geddes four hundred and fifty-six barrels of whiskey, on storage." Having the goods thus in his own possession, the debtor parted with them to a third person. The Supreme Court, in an action brought by the pledgees to recover the whiskey, said: "The plaintiffs have shown no compliance with the articles of the Code, concerning the form of the contract of pledge, which it would be necessary to observe in order to enable them to recover against the defendants, who are third persons; and our impression is, that, under the circumstances of the case, the delivery of the object pledged to Bennett, even under the receipt he gave, would of itself defeat the pledge;" referring to article 3162 of the Code, which we have been considering. And in the late case of *D'Meza's Succession* (26 id. 35), Myers & Levy had made certain accommodation indorsements for the deceased, upon the faith and promise of receiving from him a policy of insurance upon his life, for which he had made application. Having procured the policy, he told them to call at his office and get it from his book-keeper, informing them that he had told the book-keeper

it was for them. But he died before it was actually delivered. The court held that the policy was never placed beyond the control of D'Meza, and that Myers & Levy never had the requisite possession thereof. "The book-keeper," say the court, "never held the policy as agent or trustee for Myers & Levy. Although informed of his employer's intention in regard to one of the policies" (he had obtained two of the same amount), "he was never instructed to deliver it to Myers & Levy, or any one else. There was, therefore, no delivery of the policy to Myers & Levy, although the deceased intended to do so. Consequently, they never held it as a pledge or collateral security for their accommodation indorsements." These cases appear to us to govern the present. The securities claimed to have been pledged to the Credit Mobilier remained in the possession and control of the bank until the time of its failure. Up to that period they were not in such a condition as the law requires for a pledge. The placing them in such a condition afterwards, by Cavaroc's removing them from the bank at the time of its failure, was, in fact, an attempt to create a pledge then, by assuming the possession requisite thereto; and a pledge taking its origin at that time was a preference forbidden by the banking act.

It must not be overlooked that the Credit Mobilier has no other claim to the securities in question but that of pledge. A pledge, and possession, which is its essential ingredient, must be made out, or their privilege fails. An agreement for a pledge raises no privilege. There is no mortgage; for the title of the securities was never transferred to them. The evidence of the cashier is, that they were all stamped payable to the order of the bank, when discounted. They were not indorsed by the cashier until the day they were removed by Cavaroc, which was after the bank had failed.

Two cases, decided by the Supreme Court of Louisiana, have been cited and relied on (as well as some other cases in England and the United States), to show that an assignee only takes the property assigned exactly in the plight in which the debtor held it, and subject to all the equities to which it was subject in his hands. The first case is that of *Campbell* v. *Slidell* (5 La. Ann. 274), in which a syndic claimed certain real

estate which the debtor had conveyed to a *bona fide* purchaser, but the deed had not been duly registered. The court held that this made no difference. The debtor had parted with the title, and, therefore, he could not assign to the syndic what he did not himself own, although the deed might be void, for want of registry, as against a subsequent purchaser in good faith, or a subsequent judgment creditor who should acquire a mortgage by recording his judgment. It is evident that this case is unlike the one now under consideration. Here the debtor never transferred the title; and the only question is, whether there was such an attempt to pledge as to raise a privilege,—which, as we have seen, there was not.

The second case is that of *Partee, Syndic*, v. *Corning*, 9 La. Ann. 539. In this case, the debtor had actually pledged and delivered bills receivable to the defendants for simultaneous advances, but had not indorsed the bills, as required by art. 3156. The court said: "It is clear that the pledgors could not have set up this objection; and we are of opinion that the syndic cannot, upon a mere naked informality of this sort, disturb the pledge. Let it be observed that there is no pretence that the pledges were taken in bad faith, or that an injury was done to creditors in taking them." Here, the indispensable requisite of possession existed. The other formalities (which were required at that time) were enjoined by the article referred to, it is true; but there was no declaration that the pledge should be void, or that the privilege should not exist without them. We do not think that these cases conflict with the conclusion which we have reached in this case.

We have examined the other authorities referred to, among which are *Mitford* v. *Mitford*, 9 Ves. Jr. 86; *Mitchell* v. *Winslow*, 2 Story, 630; and also the cases of *Gibson* v. *Warden*, 14 Wall 244, and *Cook* v. *Tullis*, 18 id. 332; but these were all cases in which the creditor claiming adverse to the assignee had a clear legal or equitable title to the property claimed. None of them stood as the present case does, upon the claim of a privilege expressly denied by the law. We do not deem it necessary, therefore, to go into a review of those cases. They cannot affect this.

Whilst it is generally true that an assignee for the benefit of

creditors holds the property assigned subject to the same equities as the debtor or assignor held it, it is not universally true. Many transactions would be binding on the latter which would not be binding on the assignee. All sales and securities made for the actual purpose of defrauding creditors are of this class. By the law of Louisiana, a pledge, in order to be effective against third persons, must be accompanied by a privilege. It may be valid as a contract between the parties without this quality, as held both in the French law (as already shown) and in Louisiana, in the case of *Matthews* v. *Rutherford*, 7 LA. ANN. 225. But art. 3162 expressly declares that the privilege arising from a pledge does not subsist except when the thing pledged has been actually put and remained in the possession of the creditor, or of a third person agreed on by the parties. Without the privilege, or right of preference, the Credit Mobilier has no claim to hold the securities in question as against the other creditors. How, then, can it set up such a claim against the receiver? The receiver does not represent the bank alone: he represents all the parties. He represents the law, which takes charge of the property for the benefit of all creditors, according to their respective and mutual rights. Suppose no receiver had been appointed, and, when the bank failed, it had called the creditors together, and laid all its assets on a table, could the Credit Mobilier, in presence of the other creditors, have laid its hands on the securities in question, and claimed them by right of any privilege or preference? It certainly could not have done so if it had no privilege as against them. And yet this is precisely the relation in which the parties stood. The existence of a receiver, as trustee for all, did not change it. That one essential thing which the law requires for the subsistence of the privilege, namely, possession, was wanting. Other formalities might have been dispensed with. But, possession is essential, — made so by the express terms of the law. Nearly all the cases in France, where this question has arisen, have been contests between creditors claiming by way of pledge, and the syndics of the failing debtor, who stand in the place occupied by the receiver here. If there is any distinction between them, it is in favor of a firmer right on the part of the receiver to protect the interests of the general cred

stess. He is not made receiver by a voluntary assignment of the bank, but is appointed by the magistrate *in invitum* the bank, for the very purpose of securing equal justice to all its creditors, and under a law which sternly forbids preferences. Surely such an officer, whatever may be the rule in the case of voluntary assignments, may assert those rights of the general creditors, which the law itself creates, without being subject to all the disabilities under which the bank would labor in combating its private engagements with favored creditors. If the law says, "there shall be no privilege, as to third persons, by a pledge without possession," there will be no need of a judgment and execution in order to oppose such a pledge, if only a creditor, or one who represents creditors, has a proper standing in court. Insolvency of the debtor, if a bank, and the appointment of a receiver thereof, will force the pledgee into concurrence with the general creditors; and the receiver's power will be fully adequate to the protection of their interests as established by law. The case of *Bank of Alexandria* v. *Herbert* (8 Cranch, 36) presents a state of things almost precisely analogous to this. There, the trustee of an insolvent debtor recovered the proceeds of property which the latter had mortgaged to the bank. The recovery was had on the ground that the mortgage had not been recorded in proper time under the law of Virginia, which declared that all deeds and mortgages, though good between the parties, should be void as to creditors and subsequent purchasers without notice, unless recorded within eight months from date. "To set up this deed against the creditors," said Mr. Chief Justice Marshall, "would be to defeat the very object for which the law was made."

Indeed, it may be laid down as a general rule, as well at the common law as the civil law, that a trustee, assignee, or syndic, having the powers and occupying the relations which are sustained by a receiver under the National Banking Act, or an assignee in bankruptcy, may well oppose any privilege or preference which the law itself, unaided by a *bona fide* purchase or judgment, would regard as void against the general creditors in a direct contest between them and the parties claiming such privilege or preference; even though the debtor himself, on account of some personal disability arising from his own acts

or engagements, could not resist the claim. That an assignee in bankruptcy has this power cannot well be doubted; and since a national bank cannot be put into bankruptcy, but can only be wound up under the peculiar provisions of the banking act, the receiver appointed by virtue thereof must have the same power, or the absurd consequence would follow, that the property of a bank disposed of by voluntary conveyances, or pledges not good as to third persons, would be beyond the reach of creditors.

Where the legal or equitable property in a security passes, and there is no express law invalidating the transfer, the creditor will be entitled to hold it as well against the assignee or receiver as against the debtor; because the assignee only takes such title as the debtor has at the time of the assignment or insolvency. In that case, however, the question of fraud would be admissible as a question of fact, to invalidate the transaction. But, in the present case, that question does not arise; or, if it might be raised, it is immaterial. The Credit Mobilier claims a privilege by virtue of a pledge; and such a privilege, as we have seen, cannot be maintained as to third persons, without possession. Bad faith, it is true, would defeat the pledge though the creditor had possession. But want of possession is equally fatal, though the parties may have acted in good faith. Both are necessary to constitute a good pledge so as to raise a privilege against third persons. The requirement of possession is an inexorable rule of law, adopted to prevent fraud and deception; for, if the debtor remains in possession, the law presumes that those who deal with him do so on the faith of his being the unqualified owner of the goods.

This consideration meets the objection which is urged against the rule, that it would result in giving to the general creditors the benefit of the advances made to the debtor on the faith of the stipulated pledge, inasmuch as the estate is increased to the extent of these advances. It is true that the estate is so increased; but the debts and liabilities are also increased to the same amount by the demand of the party who makes the advances, — the only effect of the rule being, that the latter comes into concurrence with the other creditors on an equality, and not by way of preference; and if the latter derive any benefit from this result, it must be remembered that, in the view

of the law, they might not have given credit to the common debtor had he not remained in possession of the goods, and appeared to continue as the absolute owner thereof. If the pledge should be sustained, they would have good cause to complain that they had been deceived by the acts of the parties setting up the pledge. So that, on the question of relative merit and demerit, the parties are in all respects equal. It is on this principle that the law is founded.

These considerations also supply an answer to another suggestion, that equity will consider as done what the parties intended should be done, which it is assumed was, in this case, a transfer of the title of the securities. Equity will not exercise this power when it would injure third persons who have incurred detriment, and acquired consequent rights by the acts that are done. Such detriment has, in the view of the law, been incurred in this case, and such rights have, by the express letter of the law, accrued.

This suggestion may also be answered by the fact that it cannot be truly said to have been the intent of the parties to transfer the title. The agreement was only that "securities of the first class shall be deposited with the firm of Messrs. Cavaroc & Son." A transfer of the title would have been inconsistent with that unrestricted control over the securities which the bank desired to, and did, retain, and which must be considered as having been assented to by the Credit Mobilier, through the common agent, Cavaroc.

On this ground, therefore, of want of possession in the pledgee, or of a third person agreed upon by the parties, and of actual possession and control in the pledgor, we feel compelled to hold that the Credit Mobilier had no privilege as to third persons, and that the receiver was entitled to the securities in question.

The decree will, accordingly, be reversed, and the cause remanded to the Circuit Court with directions to enter a decree in favor of the complainant below in conformity to this opinion; and it is

So ordered.

MR. JUSTICE SWAYNE, MR. JUSTICE FIELD, and MR. JUSTICE HARLAN dissented.

CASEY v. NATIONAL BANK.

The ruling in *Casey* v. *Cavaroc* (*supra*, p. 467), as to what constitutes a valid pledge of securities, so far as third persons are concerned, applied to this case.

APPEAL from the Circuit Court of the United States for the District of Louisiana.

This case arose upon a bill filed by Casey, receiver of the New Orleans National Banking Association, to recover certain notes and bills receivable claimed by the defendants, the National Park Bank of New York, and E. H. Reynes & Brother, to be held by way of pledge for certain advances made to the bank by the National Park Bank of New York. The Circuit Court dismissed the bill, and he appealed to this court.

Mr. J. D. Rouse and *Mr. Charles Case* for the appellant.

Mr. Thomas Allen Clarke, *contra*.

MR. JUSTICE BRADLEY delivered the opinion of the court.

This case is, in all essential respects, similar to that of *Casey* v. *Cavaroc*, *supra*, p. 467. On or about the 4th of June, 1873, E. H. Reynes, on behalf of the New Orleans National Banking Association, applied to the National Park Bank of New York for a loan of $150,000, upon the notes of the former, to be secured by a pledge of collaterals. On the 11th of June, the president of the Park Bank, at New York, addressed a letter to Charles Cavaroc, president of the New Orleans National Banking Association, in which he says: "Mr. E. H. Reynes has made an application for a loan to the New Orleans National Banking Association, to be secured by the bills receivable of the bank. We will loan you $75,000, payable Oct. 10, and $75,000, payable Oct. 20, next. As collateral to these notes, select $170,000 of your bills receivable of best known names; retain them as deposited by us, sending us a schedule and receipt for them, — as held in trust for us and subject to our order." On the 11th of June, Cavaroc, as president of the New Orleans Bank, sent to the Park Bank, in a letter, two notes of the former for $75,000, each payable as agreed, and a list of notes

and bills receivable, amounting to about $170,000, with a receipt appended thereto, as follows: —

"NEW ORLEANS, June 11, 1873.

"Received, in trust, for account of the National Park Bank of New York, from the New Orleans National Banking Association, $170,084.42, of bills receivable described in annexed statement; said bills receivable being given by the New Orleans National Banking Association, as collateral security of their notes, due respectively on the 10th and 20th of October next, 1873, each for the sum of $75,000, payable to the order of the National Park Bank of New York. C. CAVAROC, *President.*"

In the letter in which these papers were enclosed, Cavaroc, after referring to the two notes, says: "I further enclose statement of $170,084.42, of bills receivable, held in trust and as collateral security for the punctual payment of the obligations of the bank, with a receipt for the same. As fast as the bills receivable will mature and be paid, I beg the privilege of substituting new collaterals, of which due notice will be given you." The Park Bank, in a letter of June 17, assented to this request, as follows: "You can make the change of collaterals you mention, advising us of the same, and that you hold the new paper the same as the old; viz., in trust." Thereupon the two notes were discounted, and the Bank of New Orleans drew the money therefor.

The bills receivable, specified in the list referred to, were placed in an envelope by the note clerk, handed to Cavaroc, and by him handed to the cashier, who, for a while, kept them in the safe; but afterwards delivered them back to the note clerk for convenience of collecting and renewing those which matured. The same substitutions of particular notes and bills were made from time to time, as was done in case of the Société de Crédit Mobilier, new lists were made, and finally they were delivered to Cavaroc after the failure of the bank, who handed them to E. H. Reynes & Co., to keep for the Park Bank of New York.

The bills were never removed from the bank, and were never indorsed by it, until the bank failed; and were always kept on the portfolio of bills receivable, without any entry on

the books or in the reports to show that they had been pledged.

It is evident that the same rule must be applied to this case which was applied in that of the Credit Mobilier. There was no such possession by or on behalf of the Park Bank as would constitute a valid pledge as to third persons.

The decree of the Circuit Court must be reversed, and the cause remanded with directions to enter a decree for the complainant below in conformity with this opinion; and it is

So ordered.

MR. JUSTICE SWAYNE, MR. JUSTICE FIELD, and MR. JUSTICE HARLAN dissented.

CASEY v. SCHUCHARDT.

The ruling in *Casey* v. *Cavaroc* (*supra*, p. 467) applied to this case.

APPEAL from the Circuit Court of the United States for the District of Louisiana.

This case arises upon a bill filed by Casey, receiver of the New Orleans National Banking Association, to recover from Schuchardt & Sons and C. Cavaroc & Son certain securities claimed by them to be held by way of pledge for certain advances made to that institution by Schuchardt & Sons. A decree was made by the Circuit Court dismissing the bill, and from that decree he appealed.

Mr. J. D. Rouse and *Mr. Charles Case* for the appellant.

Mr. Conway Robinson, contra.

MR. JUSTICE BRADLEY delivered the opinion of the court.

The case is similar to that of *Casey* v. *Cavaroc* (*supra*, p. 467). Schuchardt & Sons were bankers in New York, through whom the New Orleans National Banking Association was in the habit of drawing on foreign houses, and who indorsed and dis-

posed of the dratts, or transmitted them for collection, and made advances thereon. They were thus in the habit of indorsing and advancing on bills drawn by the bank on Seignouret Frères, of Bordeaux. In August and September they became uneasy, and required security; and it was agreed between them and the bank that they would receive and indorse drafts on Seignouret Frères, and accept the drafts of the bank on themselves to a certain limited amount, upon being secured by a pledge of commercial securities, to be deposited in the hands of Charles Cavaroc & Son. In pursuance of this arrangement, on the 17th of September, the bank transmitted to Schuchardt & Sons its drafts on Seignouret Frères to the amount of 250.000 francs, and, at the same time, drew on Schuchardt & Sons against said drafts for the sum of $50,000. On the same day, or the day following, securities of the bank to the amount of $60.000 were selected by the note clerk, by direction of Charles Cavaroc, president of the bank, put into an envelope indorsed with the name of Schuchardt & Sons, and handed to Cavaroc, who handed them to the cashier; and thereafter they were treated in precisely the same manner as the securities which were selected for the Credit Mobilier and the Park Bank, as shown in the cases which have just been decided. When due they were collected or renewed, and when wanted by the bank for other purposes they were taken and used, and other securities were substituted in their place. They continued to remain and figure on the books of the bank and in its statements as belonging to the mass of its bills discounted, no memorandum was made of the transaction, and no transfer was made of the bills until after the failure of the bank. As in the other cases referred to, they were never out of the possession of the officers of the bank, or out of the bank for a single moment, but were always subject to its disposal. As the only claim made by Schuchardt & Sons, in their answer, to the securi ties in question is by way of pledge, and as there was no such delivery and retention of possession by them, or their agents or trustees, as the law requires, to constitute the privilege of a pledge as to third persons, their claim cannot be sustained.

The decree of the Circuit Court must be reversed, and the

case remitted with directions to enter a decree for the complainant below in conformity with this opinion; and it is

So ordered.

MR. JUSTICE SWAYNE, MR. JUSTICE FIELD, and MR. JUSTICE HARLAN dissented.

CASEY v. SCHNEIDER.

Under the statute of Louisiana relating to pledges of negotiable and other securities, which was in force in the year 1873, when the transaction in this case took place, the actual delivery of such securities was sufficient to constitute a pledge.

APPEAL from the Circuit Court of the United States for the District of Louisiana.

The bill in this case was filed by Casey, receiver of the New Orleans National Banking Association, against Louis Schneider, George Jonas, and Patrick Irwin, the original defendants, who were trustees for the New Orleans Clearing-house, to compel them to deliver up notes and bills receivable and other securities to the amount of $223,677.25, and other assets to the amount of $57,500, which were pledged to the said trustees to secure the payment of clearing-house certificates issued to said bank to the amount of $199,000, from the 25th of September, 1873, to the time of its failure, Oct. 4 in that year, to enable it to settle its daily balances and exchanges with the other banks of the city represented in said clearing-house. These securities were delivered to the trustees in pledge as aforesaid at or before the issue of the clearing-house certificates which they were intended to secure; and said securities, or the proceeds thereof, were, until the bringing of this suit, kept by the trustees in their own possession for the purposes for which they had been pledged.

The articles of association, or agreement under which this transaction took place, were contained in an act passed before a notary-public on the 24th of September, 1873, when the several banks temporarily suspended cash payments under the influence

of the financial panic which then occurred. The following is a copy of the provisions of said act, which was signed and entered into by fifteen banks of New Orleans:—

"Be it known that on this twenty-fifth day of the month of September, in the year of our Lord one thousand eight hundred and seventy-three, before me, Theodore Guyol, a notary-public, duly commissioned and sworn, for the parish of Orleans, State of Louisiana, and in the presence of the witnesses hereinafter named and undersigned, personally appeared the parties whose names are hereinafter subscribed, acting for and in the names of the banks and firms which they severally represent, who declared that in their several capacities they had made and entered into the following agreements and stipulations, which shall govern their mode of procedure for and during the thirty days ensuing the date hereof: Messrs. Louis Schneider, George Jonas, and Patrick Irwin are hereby appointed as trustees to act on behalf of the parties to this agreement, the said Louis Schneider to act as president of the said trusteeship. The said trustees are hereby empowered to issue certificates to each bank and banker, upon deposits of collaterals, to the extent of seventy-five per cent of what the said trustees shall deem their par value, the said certificates to be called clearing-house certificates, and to be in sums of not less than $1,000, and not more than $5,000 each. The said trustees shall select a bank to deposit the collaterals lodged with them. The banks and bankers herein represented as parties to this act are hereby bound to issue only certified checks in payment of all sums over $25, and not to pay currency in sums exceeding $25 upon the checks of any depositor on the same day. The parties to this agreement shall use certified checks in the purchase of domestic or foreign exchange, and clearing-house certificates only in settlement of their daily exchanges and balances. All new deposits shall be payable in the same kind of currency as that deposited. The several banks and bankers herein represented are hereby bound not to increase their present line of discounts, and to use all efforts to curtail their liabilities. In case, at the expiration of thirty days from this date, any of the parties to this act should fail to redeem the collaterals deposited by them as aforesaid, the said trustees are hereby authorized and empowered to sell and dispose of the said collaterals at private sale to the best of the interest of the parties interested, and to apply the proceeds of such sales to the redemption of said certificates; the whole without any intervention of justice. This agreement being

made and entered into to prevent the drain of currency which would inevitably take place on the banks of New Orleans, it is understood that it shall not apply to gold deposits, which are to be paid and settled in the usual manner."

The court below dismissed the bill, and from that decree the receiver appealed here.

Mr. J. D. Rouse and *Mr. Charles Case* for the appellant

Mr. Thomas Allen Clarke, contra.

MR. JUSTICE BRADLEY, after stating the case, delivered the opinion of the court.

It is obvious that this transaction is free from the objection which applied in the other cases which we have just considered. In this case, there was an actual delivery of the securities pledged, at the time of advancing the certificates given on the faith thereof, and a continued retention of possession of the pledge.

The only objection raised in the case which we deem it necessary to consider is, whether a mere delivery of the securities was sufficient to constitute a pledge; and this depends on the question whether the act of 1855, relating to pledges of negotiable and other securities, was in force in 1873. We think there is no doubt that it was in force. That act was first adopted in 1852, and was re-enacted in 1855. It modified those provisions of the Civil Code, art. 3158, &c., which required a transfer by indorsement and other formalities, in order to make a good pledge. The act in question declared, "that where a debtor wishes to pawn promissory notes, bills of exchange, stocks, obligations, or claims upon other persons, he shall deliver to the creditor the notes, bills of exchange, certificates of stock, or other evidences of the claims or rights so pawned; and such pawn so made, without further formalities, shall be valid, as well against third persons as against pledgers thereof, if made in good faith."

Ever since this enactment, its words have been inserted in the Code itself, in every successive edition, in immediate connection with the articles which it modifies. The articles themselves are reproduced, it is true; but it is probable that they

cover some cases which are not affected by the statutes, and hence the reproduction of them is proper; but whether so or not, we hold that the insertion of the statute in connection with them continues in effect the modification which it created. Subsequent articles of the Code relating to the registration of all privileges and other formalities, being previous to the statute in point of time, cannot affect its operation, though standing on a later page and in a subsequent place in the body of the Code.

This consideration meets the objection arising from the general repealing section of the Revised Statutes, which repeals all statutes and parts of statutes which are not incorporated into the Code, and are repugnant to its provisions.

We are of opinion that the statute was in force, and that the actual delivery of the securities was sufficient to constitute a pledge.

Decree affirmed.

RAILROAD COMPANY v. MAINE.

1. Where two or more corporations, subjected to a special tax upon the net income of their roads, with immunity from other taxation, — the amount of such special tax being dependent upon reports to be made and information communicated by their directors and other officers, — are consolidated into a new corporation, with different directors and other officers, who are neither bound nor able to make the reports and give the information required of the original companies, the new corporation thus created is not entitled to the immunity of the original companies from general taxation.
2. A new corporation may be created by the union of two or more corporations, and its powers and privileges designated by reference to the charters of other companies as well as by special enumeration.
3. The act of the legislature of Maine of 1856, authorizing two or more existing corporations to consolidate and form a new corporation, was an act of incorporation of the new company; and the latter, upon its formation, became at once subject to the provisions of the general law of 1831, which declared that any act of incorporation subsequently passed should at all times thereafter "be liable to be amended, altered, or repealed at the pleasure of the legislature, in the same manner as if an express provision to that effect were therein contained, unless there shall have been inserted in such act of incorporation an express limitation or provision to the contrary." So long as this provision remained unrepealed, subsequent legislation not repugnant to it was controlled by it, and is to be construed and enforced in connection with it.

4. There being in the act of 1856 no limitation upon the power of amendment, alteration, and repeal, the State, by the reservation in the law of 1831, which is to be considered as if embodied in that act, retained the power to alter it in all particulars constituting the grant of corporate rights, privileges, and immunities to the new company formed under it. The existence of the corporation, and its franchises and immunities, derived directly from the State, were thus kept under its control. Rights and interests acquired by the company, not constituting a part of the contract of incorporation, stand upon a different footing.

ERROR to the Supreme Judicial Court of the State of Maine.

An act of the legislature of Maine, passed in 1874, provides for a tax upon the corporate franchise of every railroad company in that State, at the rate of one and one-half per cent upon its estimated value, determined in this wise: The governor and council of the State are each year required to ascertain the true market value of its shares, and estimate therefrom the fair cash valuation of all the shares constituting its capital stock, on the first day of the preceding April. From this valuation are to be deducted the value of its real estate and other property subjected to local taxation, and, where its lines extend beyond the limits of the State, such portion of the valuation as is proportional to the length of that part of the lines lying without the State. Upon the value of the franchise thus determined the governor and council are to assess the tax; the assessment is to be certified by the secretary of state to the treasurer, and by him notice thereof is to be given to the company. The tax thus assessed is to be in lieu of all taxes on shares of the company previously required by law; and, in case of non-payment, an action will lie for its collection.

The Maine Central Railroad Company was a corporation of Maine in 1875, and the owner of a railroad in the State, and its franchise was assessed and taxed for that year under this statute. It is admitted that the provisions of the act were in all respects complied with, and the required notice of the assessment given to the company. The tax not being paid, the present action of debt was brought for its recovery. The company pleaded in defence that the act of 1874 was in conflict with the provisions of its charter, and also with the Constitution of the State and of the United States, in that it impaired the obligation of the contract contained in the charter. Upon

an agreed statement of facts, the case was submitted to the Supreme Court of the State for its decision. That court gave judgment for the State, sustaining the validity of the tax; and the company brought the case to this court on writ of error.

The Maine Central Railroad Company was originally formed in October, 1862, by the consolidation of two distinct corporations, — the Androscoggin and Kennebec Railroad Company, which was incorporated in March, 1845, and had constructed a railway from Waterville to Danville; and the Penobscot and Kennebec Railroad Company, which was incorporated in April, 1845, and had constructed a railway from Bangor to Waterville.

The charter of each company required it to keep a regular account of its disbursements, expenditures, and receipts, in a book, which was to be open at all times to the inspection of the governor and council, and any committee of the legislature; and required its treasurer, at the expiration of every year, to make, under oath, an exhibit to the legislature of the net profits derived from the income of its road. It also provided that the real estate of the company should be taxable by the towns, cities, and plantations in which it lay, in the same manner as that of private persons, and its value be estimated in the same way; that the shares of the stockholders should be deemed personal estate, taxable to them at their places of residence; and that whenever the annual net income of the company amounted to ten per cent upon the cost of the road and "its appendages, and incidental expenses," the directors should make a special report of the fact to the legislature, "from and after which time" one moiety, or such other portion as the legislature might determine, of the net income accruing thereafter, above the ten per cent, first to be paid to the stockholders, should annually be paid by the treasurer of the corporation, as a tax, into the treasury of the State. It also declared that no other tax should ever be levied or assessed on the corporation, or any of its privileges or franchises, and that the charter should "not be revoked, annulled, altered, limited, or restrained, without the consent of the corporation, except by due process of law."

The consolidation of these two companies into the Maine Central Railroad Company was effected under an act passed in

April, 1856, which authorized it upon the agreement of their directors, approved by the stockholders, prescribing the terms and conditions thereof, the mode of carrying the same into effect, the name of the new corporation, the number of its directors, the time and place of holding the first election, the amount of its capital, the number of shares of stock, and the manner of converting the shares of the capital stock of each of the corporations into those of the new corporation; and filing a duplicate or counterpart of the agreement in the office of the secretary of state. Immediately afterwards, upon the election of the directors, the corporations making the agreement were to be consolidated, and, together, to constitute a new corporation, by the name therein mentioned. The act provided that the new corporation thus formed should have "all the powers, privileges, and immunities" possessed by each of the corporations entering into the agreement, and be subject to all the legal obligations then resting upon them respectively; with a proviso, however, that it should not be construed as extinguishing the old corporations or annulling their charters, but that they should be "regarded as still subsisting, so far as their continuance for the purpose of upholding any right, title, or interest, power, privilege, or immunity, ever possessed, exercised, or enjoyed by either of them may be necessary for the protection of the creditors or mortgagees of either of them, or of such new corporation; the separate exercise of their respective powers and the separate enjoyment of their respective privileges and immunities being suspended until the protection of such creditors or mortgagees shall require their resumption, when such suspension shall cease, so far and for such time as the protection of such creditors or mortgagees may require."

Some years after this consolidation, by a law passed in 1873, three other railroad companies, whose roads were at that time under lease to the Maine Central Railroad Company, were allowed to consolidate with it, upon the same terms and conditions prescribed by the act of 1856, so far as they were applicable; and such second consolidation was effected in 1874. These three companies were the Portland and Kennebec Railroad Company, which owned a railroad from Augusta to Portland; the Sommerset and Kennebec Railroad Company, which

had constructed a railroad from Skowhegan to Augusta; and the Leeds and Farmington Railroad Company, which owned a railroad from Farmington to Leeds Junction.

The first of these three companies was formed by holders of bonds of the Kennebec and Portland Railroad Company, a corporation created in 1836, and, by the act of 1845, possessed of a similar conditional immunity from taxation to that of the two companies first consolidated. By authority of the legislature, this company had issued its bonds, secured by mortgage upon its road and franchise. In 1862, the mortgage was foreclosed, and the present corporation formed. The new corporation was, by statute, invested with the legal rights and immunities of the original corporation. It is admitted that the charters of the other two of these three corporations contained no limitation upon the taxing power of the State.

It is upon the franchise of the Maine Central Company, as formed in 1874, upon the second consolidation, that the tax was assessed and levied for which this action was brought.

An act of the legislature of Maine, passed in 1831, c. 503 contained the following provision:—

"All acts of incorporation, which shall be passed after the passage of this act, shall at all times hereafter be liable to be amended, altered, or repealed, at the pleasure of the legislature, in the same manner as if an express provision to that effect were therein contained, unless there shall have been inserted in such act of incorporation an express limitation or provision to the contrary."

Judgment was rendered in favor of the State, and the company sued out this writ of error.

Mr. Josiah H. Drummond for the plaintiff in error.

1. The legislature has the power, by contract, to exempt a person or corporation from taxation, and no subsequent legislature can repeal the exemption. Cooley, Taxation, 55; *New Jersey* v. *Wilson*, 7 Cranch, 164; *Gordon* v. *Appeal Tax Court*, 3 How. 133; *Piqua Branch of State Bank of Ohio* v. *Knoop*, 16 id. 369; *Ohio Life Insurance & Trust Co.* v. *Debolt*, id. 416; *Dodge* v. *Woolsey*, 18 id. 331; *Mechanics', &c. Bank* v. *Thomas*, id. 384; *Jefferson Branch Bank* v. *Skelly*, 1 Black. 436; *McGee* v. *Mathis*, 4 Wall. 143; *Von Hoffman* v. *City of*

Quincy, id. 535; *Home of the Friendless* v. *Rouse*, 8 id. 430; *Washington University* v. *Rouse*, id. 439; *Wilmington Railroad* v. *Reid*, 13 id. 264; *Raleigh & Gaston Railroad Co.* v. *Reid*, id. 269; *Tomlinson* v. *Jessup*, 15 id. 454; *Tomlinson* v. *Branch*, id. 460; *Humphrey* v. *Pegues*, 16 id. 244; *The Delaware Railroad Tax*, 18 id. 206; *Pacific Railroad Co.* v. *Maguire*, 20 id 86: *Erie Railway Co.* v. *Pennsylvania*, 21 id. 492; *Bailey* v. *Maguire*, 22 id. 215; *Central Railroad, &c. Co.* v. *Georgia*, 92 U. S. 665; *Branch et al.* v. *City of Charleston et al.*, id. 677.

This power, when the charters of the consolidating companies were granted, or when any of the acts in addition thereto, or under which the plaintiff in error claims any rights, were passed, was not limited by any provisions of the Constitution of Maine.

2. The plaintiff in error has a valid subsisting contract in its charter, in relation to the manner in which it shall be taxed. The two companies first consolidated into the Maine Central were, by their charters of 1845, subjected only to a tax upon the net income of their roads, to be ascertained in a prescribed manner, over and above ten per cent first paid to their stockholders; and their charters declared that no other tax should ever be levied or assessed upon the corporations, or any of their privileges or franchises.

The act of 1874 authorizes, in terms, a tax "upon the corporate franchise" of the Maine Central Company; and it is admitted that such a tax is other than the one provided in the charters of the two consolidating companies. The act of consolidation of 1856, under which the Maine Central was formed, provided that it should have "all the powers, privileges, and immunities" possessed by each of the consolidating companies; and thus the question arises, whether the act of 1874 overrides and controls this exemption; if it does not, the judgment below must be reversed.

3. The charters of the consolidating companies were not controlled by the act of 1831, for they contain a provision that they "shall not be revoked, annulled, altered, limited, or restrained, without the consent of the corporation, except by due process of law;" and no specific reference to that act was necessary. It is claimed by the State that that act does apply, as there is no

express exemption from it contained in the act of 1856, which, it is insisted, was an act of incorporation accepted by the company.

We answer, that the act of 1831 is limited, in its effect, to "acts of incorporation;" and that the act of 1856 was not an "act of incorporation," within the meaning of the term in the act of 1831.

An act of incorporation was then understood to be the granting of a franchise by the State to a body created by its authority, and was called a charter.

The act of 1856 does not create a body corporate, but merely authorizes two existing bodies corporate to unite in one; nor does it grant a franchise, but merely provides that, by the consolidation, their franchises shall thereby, *eo instanti*, be transferred to and vested in the consolidated corporation.

It is true that the act uses the term "new corporation," but it uses the term to distinguish the consolidated corporation from those composing it. In that limited sense, but not in the legal sense, it is a new corporation.

4. The present charter of the Maine Central Railroad Company consists of the several charters of the original companies, which are now merged into the present company. Its rights, powers, and privileges, as to any particular portion of its railroad, must be determined from these charters, and not from the consolidating act. Such has been the uniform decision of this court, as is shown by the cases already cited.

In *Chesapeake, &c. Railroad Co.* v. *Virginia* (94 U. S. 718), the court says (p. 725), in effect, that it has been settled by its repeated decisions, that when two companies consolidate, with all the rights, privileges, and immunities of each, and one had an exemption and one had not, the consolidated company takes the one with the exemption, and the other without, — a doctrine expressly in conflict with the right of the State to the tax in question.

If the immunity from taxation, therefore, now claimed originally existed, and was not affected by the consolidation of 1862, it was not impaired by the consolidation of 1874. See also *The Delaware Railroad Tax Case*, 18 Wall. 206, and *Central Railroad, &c. Co.* v. *Georgia*, 92 U. S. 665.

Mr. Lucius A. Emery, Attorney-General of Maine, *contra*.

1. The Maine Central Railroad Company, which came into existence in 1862, was not a revival nor a continuation of the consolidating corporations. By the very terms of the act of 1856 creating it, it was a new corporation with a different name, and it was to have a separate board of directors. All the rights, franchises, and property of the old corporations were "transferred to and vested in" it. Its distinct and independent existence is made apparent by the fourth section of the act, which provides that the old corporations shall still retain an existence, though in an attenuated form, for the purpose of protecting their respective creditors. Although it was not, in fact, organized until 1862, nevertheless, the sole source of and authority for its existence was that act. Assuming that the act can be repealed, the simple words, "the act of 1856 is hereby repealed," would dissolve this new corporation. Its franchises were conferred upon it, not by the old companies, but by the legislature. The old corporations were incorporated in 1845; the new one, in 1856. The old corporations gave up their rights, property, and franchises, and had no existence for active duties. Their organization was gone. They had neither president nor directors. They surrendered their respective charters. Their franchises returned to the legislature which gave them, and were granted by it to the new corporation. The latter was a new birth, without the sin of exemption from taxation. This view is sustained by the authorities. See *State* v. *Sherman*, 22 Ohio St. 411; *McMahan* v. *Morrison*, 16 Ind. 172; *Clearwater* v. *Meredith et al.*, 1 Wall. 25.

2. The new corporation became at once subject to the act of 1831, which is an essential provision of every subsequent act of incorporation, and is as much a part of the act of 1856 as if it were therein specially set forth. The right of the legislature to annul or repeal such subsequent act is, therefore, unquestionable, unless it contains "an express limitation or provision to the contrary." The limitation must be expressed, directly and in terms.

3. Every presumption will be indulged against the intention of the legislature to surrender the power of taxation. The

language in which the asserted surrender is made must be clear and unmistakable. *Erie Railway Co.* v. *Pennsylvania*, 21 Wall. 492; *Tucker* v. *Ferguson et al.*, 22 id. 527; *Bailey* v. *Magwire*, id. 215; *St. Louis* v. *Boatman's Insurance & Trust Co.*, 47 Mo. 155.

4. The legislature could not have intended to exempt the plaintiff in error from taxation. When it provided a specific mode of taxation for the Androscoggin and Kennebec Company, and the Penobscot and Kennebec Company, and covenanted never to tax them in any other way, it imposed on them certain duties. The directors of each corporation were required to keep accounts of the expenses and earnings of its road, and make a special report to the legislature when the earnings were ten per cent per year upon the cost. If the directors neither could nor would do this, the company would be obliged to submit to some other form of taxation. So of the treasurer. Now, each of these corporations of 1845 having surrendered its franchise to the legislature, and given up its organization, has neither directors nor a treasurer to make report and pay over. Each, so long as it stood ready to perform the prescribed duties, was entitled to this exemption, and lost it the moment it incapacitated itself from performing them.

MR. JUSTICE FIELD, after stating the facts, delivered the opinion of the court.

The principal question for our determination is whether the conditional and limited taxation, to which the two original companies first consolidated were subjected, is extended to the present corporation defendant after its second consolidation. As the act of 1856, authorizing the first consolidation, conferred upon the new corporation "all the powers, privileges, and immunities" possessed by each of the consolidating companies, and the act of 1873, by reference, adopts the same provisions, it is contended that the new company is exempt from any other taxation than that to which they were subjected, at least, that so much of the road of the company as originally belonged to those consolidating companies is thus exempt.

It is not questioned by counsel on either side that the charter of a private corporation is a contract between the State and its corporators, and protected under the Constitution of the United

States, like any other contract, from legislation impairing its obligation. This has been so often decided, that its statement is only the repetition of an admitted legal principle. The only question for serious inquiry, where legislation affecting the charter is the subject of complaint, is whether it does in fact impair the obligation of the contract; for there may be legislation touching the powers of the corporation which will not have that result. Nor is it questioned by counsel that the taxation, both in its mode and extent, may be so prescribed in the charter as to preclude any subsequent interference by the State with either. Repeated decisions of this court have so adjudged; though the right of one legislature to bind its successors in the exercise of its power of taxation, which is an essential attribute of sovereignty, has met with frequent earnest dissent from a minority of the court.

The provision in the charters of the two original companies was a clear conditional limitation upon the power of the State to tax them. Language could not be made more direct and positive. Only upon the annual net income received from the roads of the companies above the ten per cent paid to the stockholders could a tax be imposed by the State, and then only a portion of such net income could be exacted. "No other tax," said the charter, should ever be levied or assessed on the corporations, or any of their privileges or franchises. So long as these companies were distinct corporations, only the tax thus prescribed could be imposed upon them. But, when they were merged in the new corporation, their distinct corporate existence ceased, except so far as their existence might be necessary for the protection of their creditors or mortgagees, or those of the new corporation. The conditions upon which the limitation of taxation was prescribed could be performed only while the companies were distinct corporations operating separate lines. Those companies only were required to keep an account of their disbursements, expenditures, and receipts, for the inspection of the governor and council, and committees of the legislature. Their treasurers only were bound to render to the legislature, at the expiration of every year, exhibits under oath of the net profits of their roads. Their directors only were called upon to make a special report to the legislature,

whenever their annual income amounted to ten per cent upon the cost and expenses of their roads. It was only upon such report that the legislature was to determine the portion of the income which should be received in lieu of other taxes. The new company was subject to no such duty of keeping an account of the expenditures and receipts of the original lines; its directors were not called upon to make any report as to the income of such lines; nor was its treasurer required to make any annual exhibit of the net profits derived from them. The assets of all the companies were intermingled; and continuous trains were run over the whole length of the several roads. It would have been impossible to show what would have been the profits of each road without the consolidation. Only an approximation to them would have been attainable; and that would have been based upon estimates more or less speculative in their character.

The consolidation of the original companies was a voluntary proceeding on their part. The law made it dependent upon their agreement; and that law was presumably passed upon their request, as they are named in it, and they acted under it. Having thus disabled themselves from a compliance with the conditions, upon the performance of which the amount to be paid as a tax to the State could be ascertained, they must be considered as having waived the exemption dependent upon such performance. Their exemption was qualified by their duties, and dependent upon them. They incapacitated themselves from the performance of those duties by a proceeding which they supposed would give them greater advantages than they possessed in their separate condition, and they thus lost their exemption. The new company was not charged with the duties which they were to perform to the State, and by which the State was to be governed in its taxation, nor was the State under any obligation to accept a substituted performance from other parties.

The provision in the act authorizing the consolidation, that the new company should have all the powers, privileges, and immunities of the original companies, must, therefore, be taken with the qualification that it should have them so far as they could be exercised or enjoyed by it, with its different officers

and distinct constitution. Where their exercise or enjoyment required other officers or a different constitution, the grant was to that extent necessarily inoperative.

The Maine Central Railroad Company was, upon the consolidation of the original companies, a new corporation, as distinct from them as though it had been created before their existence. The fact that the powers, privileges, and immunities which they had possessed were conferred upon the new company, so far as they could be exercised or enjoyed by it, in no respect affected its character as a distinct body. A new corporation may be as readily created by the union of two or more corporations as by the union of individuals; and its powers and privileges may as well be designated by reference to the charters of other companies as by special enumeration.

It follows that the limitation of the taxing power of the State to a portion of their net income prescribed in the charters of the old companies ceased upon their consolidation into the Maine Central. When this new company came into existence, it became subject to the provisions of the general law of 1831, which declared that any act of incorporation subsequently passed should at all times thereafter "be liable to be amended, altered, or repealed, at the pleasure of the legislature, in the same manner as if an express provision to that effect were therein contained, unless there shall have been inserted in such act of incorporation an express limitation or provision to the contrary." Although this provision could not bind any succeeding legislature which might choose to disregard it, so long as it remained unrepealed, subsequent legislation not repugnant to it was controlled by it, and must be construed and enforced in connection with it. There was no limitation in the act authorizing the consolidation, which was the act of incorporation of the new company, upon the legislative power of amendment and alteration, and, of course, there was none upon the extent or mode of taxation which might be subsequently adopted. By the reservation in the law of 1831, which is to be considered as if embodied in that act, the State retained the power to alter it in all particulars constituting the grant to the new company, formed under it, of corporate rights, privileges, and immunities. The existence of the corporation, and

its franchises and immunities, derived directly from the State, were thus kept under its control. Rights and interests acquired by the company, not constituting a part of the contract of incorporation, stand upon a different footing. But no such rights or interests are here involved. *New Jersey* v. *Yard*, 95 U. S. 104; *Tomlinson* v. *Jessup*, 15 Wall. 454.

The several cases cited by counsel from the decisions of this court, upon the effect of consolidating several companies where some of them possess an immunity from taxation, do not militate against the views here expressed. They are *The Delaware Railroad Tax*, 18 Wall. 206; *Central Railroad & Banking Co.* v. *Georgia*, 92 U. S. 665; and *Chesapeake & Ohio Railroad Co.* v. *Virginia*, 94 U. S. 718. In the Delaware Railroad Tax Case, it appeared that three companies — one of which owned a railroad in Pennsylvania, one a railroad in Maryland, and one a railroad in Delaware — were consolidated into one company under the legislation of those States. The act of the legislature of Delaware declared that the respective companies should constitute one company, and be entitled to all the rights, privileges, and immunities which each and all of them possessed and enjoyed under their respective charters; and one of those charters, which was granted by Maryland, had exempted the shares of the capital stock of its company from taxation. It was held that the provision in the Delaware act in no respect affected its power of taxation upon the property of the new company in that State; that the new company stood in each State as the original company had previously stood in that State, invested with the same rights and subject to the same liabilities; and that it was not the intention of either State to enforce within its limits the legislation of the other. This decision has no bearing upon the questions involved in the present case.

In *Central Railroad & Banking Co.* v. *Georgia*, it was held that the consolidation of two railroad companies did not necessarily work a dissolution of both and the creation of a new corporation; that whether such would be its effect depended upon the legislative intent manifested in the statute under which the consolidation took place; that, in the case under consideration, the two companies there mentioned were

not dissolved by their consolidation; that the consolidated company continued to possess all the rights and immunities which were conferred upon each company by its original charter; and, inasmuch as one of the companies was exempted from liability to any greater tax than one-half of one per cent of its net annual income, the exemption continued after the consolidation. The State, in that case, claimed that a new company was the result of the consolidation, and that its charter was then subject to repeal or modification, at the will of the legislature. The court replied, that if the charter of the company having the exemption had been surrendered, and a new corporation created by the consolidation, the consequences claimed by the State "might and probably would follow." There is nothing in this decision which touches the case at bar.

In *Chesapeake & Ohio Railroad Co.* v. *Virginia*, it was held that a railroad corporation, formed under an act of the legislature by the consolidation of existing companies, and "vested with all the rights, privileges, franchise, and property which may have been vested in either company prior to the act of consolidation," acquired no greater immunity from taxation than had been severally enjoyed by the original companies as to the portions of the road belonging to them, and that whatever property had been subject to taxation previous to the consolidation remained so afterwards. This decision has no application to the questions involved in the case before us. In none of these cases were duties required of the original companies and their directors and officers, which could not have been equally discharged by the new companies, nor was the extent or mode of taxation made dependent upon information to be imparted by officers who, upon the consolidation of the companies, had ceased to exist.

We have in this opinion made no reference to the charters of the three railroad companies which were consolidated with the Maine Central Company in 1874. It is admitted that the charters of two of them contained no limitation upon the taxing power of the State. The third company, incorporated in 1836, obtained, by an act passed in 1845, a conditional exemption from taxation, like that in the charters of the two companies in the first consolidation. A mortgage upon its road and

franchise was, in 1862, foreclosed by the mortgagees, who acquired the property and formed a new corporation. This new corporation was, by the statute which authorized it, declared invested with the legal rights and immunities of the original corporation. When it afterwards consolidated with the Maine Central, its rights and immunities passed to that company, only to the extent and subject to the same limitations as those of the original two companies.

It follows that there is no error in the judgment of the Supreme Court of Maine; and it is, therefore,

Affirmed.

MR. JUSTICE STRONG dissented.

ATHERTON v. FOWLER.

1. No right of pre-emption can be established by a settlement and improvement on a tract of public land where the claimant forcibly intruded upon the possession of one who had already settled upon, improved, and enclosed that tract.
2. Such an intrusion, though made under pretence of pre-empting the land, is but a naked, unlawful trespass, and cannot initiate a right of pre-emption.

ERROR to the Supreme Court of the State of California.

The facts are stated in the opinion of the court.

Mr. Montgomery Blair for the plaintiff in error.

Mr. S. F. Phillips, contra.

MR. JUSTICE MILLER delivered the opinion of the court.

This case originates in an action of replevin brought by Page, who died during the progress of the litigation, and is now represented by Atherton, his executor, the plaintiff in error. The plaintiff below obtained possession of the hay, which was the subject of the writ of replevin; but, on trial before a jury, they found he was not entitled to the possession, and judgment for the value of the hay was rendered against him. This judgment was affirmed on appeal to the Supreme Court of the State, and is now brought before us for review on questions which

relate to the rights acquired in the soil from which the hay was cut, or rather which might have been acquired to such soil under acts of Congress.

The hay, which is the subject of controversy, was cut in the summer of 1863, on part of the land embraced within the Vallejo grant of the Soscol ranch.

The history of the title to that ranch is given in the report of *Frisbie* v. *Whitney*, 9 Wall. 187. The claim of Vallejo to the confirmation of the grant was finally decided against him in this court, March 22, 1862. By virtue of the thirteenth section of the act of Congress of March 3, 1851 (9 Stat. 633), the land embraced within his claim became public land of the United States whenever it was finally decided to be invalid. No public survey had been extended over these lands at that time, and the whole of the Soscol ranch was held in possession, and had been for years, under the Mexican patent to Vallejo, and by tenants or purchasers under his title.

Nevertheless, a large number of persons who had previously no interest in or claim to or possession of any part of this land invaded it by force, tore down the fences, dispossessed those who occupied it, and built on and cultivated parts of it, under pretence of establishing a right of pre-emption to the several parts which they so seized. The general character of this movement is well described in *Frisbie* v. *Whitney*, *supra*.

The defendants in this case, though taking no part in the night invasion mentioned in that case, did, during the spring and summer of 1862 and 1863, enter upon the lands in the possession of Page, — land which in every instance was enclosed within fences, and which was in actual cultivation. And this entry was without asking the consent, or having in any way the permission, of those in possession, but by forcibly driving them out. The hay, which is the subject of the controversy, was cut from meadows or grounds set in grass by Page. These facts are stated, or evidence from which the jury had a right to infer them, in a case made by the parties, on which the Supreme Court finally decided it.

But Congress, on the third day of March, 1863, enacted that all settlers on the land claiming under Vallejo might enter the land held by them to the extent of their actual possession at

$1.25 per acre, and have a patent for the same as soon as the surveys were extended over the ranch. So that, when the hay in controversy was cut, the defendants knew, or should have known, that they were mere trespassers on the lands of Page, and had no right to the hay.

It is, however, to be considered that there is the doctrine that a person having the legal title to land, but out of possession, cannot maintain the action of replevin for hay or timber cut on the land. This general doctrine has been modified both by statute and by judicial decision in the several States, until it is not easy to say exactly how much of it is left in any one of the States. In the case before us, the court, on the trial, gave the law on the subject very clearly; and, as it is a doctrine not affected by the Constitution or laws of the United States, we must take it to have been correctly expounded to the jury.

The court instructed them, that, if plaintiff was in the actual possession of the land when the defendants entered, there was no disseisin; and the subsequent possession of defendants did not oust that of the plaintiff, unless they found that they had entered in good faith, with intent to pre-empt the land on which the hay was cut, and that they had the actual possession of it at the time the hay was cut. To the last part of this instruction plaintiff excepted. The court also said: "If you believe from the evidence that the defendants entered in good faith, with intention to pre-empt the land on which the hay was cut, and had actual posssession of it at the time the hay was cut, your verdict should be for the defendants."

The plaintiff asked the court to charge the jury, that, if he was in the actual possession of the land, having cultivated it for several years previously, and the defendants broke through his enclosure against his consent, the entry was unlawful, though the land might be public land, the prior right of pre-emption belonging to him who had the prior and continued possession. This the court refused.

In short, it is obvious that the case was made by the court to turn on the assumption that the land was, in its then condition, liable to be pre-empted by defendants, against the wishes of plaintiff, and that, to effect the entry and cultivation necessary to establish the right of pre-emption, the defendants could, by

force and violence and by breaking into an actual enclosure and by turning the plaintiff out, acquire such right of pre-emption, and at the same time a *bona fide* possession.

Unless the laws of the United States justify this conduct, the instructions of the court were erroneous, and to the prejudice of the plaintiff in a matter involving his rights under the acts of Congress.

At the time this action was tried, Page had obtained title to the land under the act of March 3, 1865. This related back to his possession under the Vallejo grant; and the title in this action was not disputed. It was simply a question before the court in that trial, therefore, whether the intention to pre-empt the land changed what would otherwise have been a mere trespass into a *bona fide* possession which would defeat the present action.

Undoubtedly, there have been cases, and may be cases again, where two persons making settlement on different parts of the same quarter-section of land may present conflicting claims to the right of pre-emption of the whole quarter-section, and neither of them be a trespasser upon the possession of the other, for the reason that the quarter-section is open, unenclosed, and neither party interferes with the actual possession of the other. In such cases, the settlement of the later of the two may be *bona fide*, for many reasons. The first party may not have the qualifications necessary to a pre-emptor, or he may have pre-empted other land, or he may have permitted the time for filing his declaration to elapse, in which case the statute expressly declares that another person may become pre-emptor, or it may not be known that the settlements are on the same quarter. *Johnson* v. *Towsley*, 13 Wall. 72; sect. 15, act of Sept. 4, 1841, 5 Stat. 455.

But all these cases suppose that the parties began their possession and made their settlements and built their houses on lands not in the actual possession of another. It is not to be presumed that Congress intended, in the remote regions where these settlements are made, to invite forcible invasion of the premises of another, in order to confer the gratuitous right of preference of purchase on the invaders. In the parts of the country where these pre-emptions are usually made, the protec-

tion of the law to rights of person and property is generally but imperfect under the best of circumstances. It cannot, therefore, be believed, without the strongest evidence, that Congress has extended a standing invitation to the strong, the daring, and the unscrupulous to dispossess by force the weak and the timid from actual improvements on the public land, in order that the intentional trespasser may secure by these means the preferred right to buy the land of the government when it comes into market.

A careful examination of the laws concerning the survey and sale of our public lands will show that nothing of this kind is sanctioned, and that so many other ways are open to purchasers of these lands that no such proceeding is necessary to enable any one to secure his rights. In the earliest stages of our land system no right or interest could be secured by the individual in any public land until it had been surveyed into legal subdivisions. Nor after this had been done was it subject to sale, until, by a proclamation of the President, it was brought into market. This proclamation always fixed a time and place when the lands within a given district were to be offered for sale at public auction; and until all of them were sold which could be sold in this manner, at prices above the minimum fixed by law, no one could make a private entry of a particular tract, or establish a claim to it. The scenes of violence, fraud, and oppression, and the combinations which attended these sales, and the wrongs perpetrated under them, led to the law of pre-emption. It often occurred that emigration, in advance of the readiness of the public lands for these sales, had caused hundreds and thousands to settle on them; and, when they came to be sold at public auction, their value, enhanced by the houses, fences, and other improvements of the settler, placed them beyond his reach, and they fell into the hands of heartless speculators. To remedy this state of things the pre-emption system was established. This, at first, was only applicable to lands which had been surveyed. But gradually this was changed, until, in 1862, pre-emptions were allowed, under proper restrictions, on unsurveyed lands as well as those surveyed. Act of June 2, 1862, 12 Stat. 418.

It may, therefore, be said that at the time the transactions

occurred of which we are speaking there were three modes of securing title to public lands: 1. By purchase at the public land sales ordered by the President. 2. By private entry; that is, by going to the land-officer and paying at the rate of $1.25 or $2.50 per acre for any land subject to private entry or sale at those rates respectively. 3. By pre-emption.

Both the former modes contemplated the immediate payment of the money, and the right of the party to the land was fixed when this was done. He had then a vested interest, which became a perfect legal title when he received his patent. This was usually after such delay as was necessary to ascertain if there were any conflicting claims or rights to the land.

But the pre-emption of land did not require or admit of payment at the time the right of pre-emption was exercised. The land might not have been surveyed, and then it could not be identified or described so as to cause a patent to issue on it. The law also intended to give the settler time to build a house, break up the ground, and make a settlement first and payment afterwards.

During this preliminary period he had no vested right to the land; but, as we have elsewhere decided, he did thus acquire the right of preference in the purchase. That is to say, if he made the necessary settlement and improvement, and the necessary declaration in writing, no other person could buy the land until the period elapsed which the law gave him to pay the purchase-money. *Frisbie* v. *Whitney*, 9 Wall. 187; *Hutchings* v. *Low*, 15 id. 77.

Among the things which the law required of a pre-emptor, and the principal things required of him to secure his right, were: 1. To make a settlement on the land in person. 2. To inhabit and improve the same. 3. To erect a dwelling-house thereon. Sect. 2259, Rev. Stat.

At the moment the land on which the hay in this case was cut became liable to pre-emption, the whole of it was, by the various persons claiming under Vallejo, 1, settled on by them in person; 2, inhabited and improved by them; and, 3, it had dwellings erected on it by them.

Unless some reason is shown, not found in this record, these were the persons entitled to make pre-emption, and no one else.

But suppose they were not. Does the policy of the pre-emption law authorize a stranger to thrust these men out of their houses, seize their improvements, and settle exactly where they were settled, and by these acts acquire the initiatory right of pre-emption? The generosity by which Congress gave the settler the right of pre-emption was not intended to give him the benefit of another man's labor, and authorize him to turn that man and his family out of their home. It did not propose to give its bounty to settlements obtained by violence at the expense of others. The right to make a settlement was to be exercised on unsettled land; to make improvements on unimproved land. To erect a dwelling-house did not mean to seize some other man's dwelling. It had reference to vacant land, to unimproved land; and it would have shocked the moral sense of the men who passed these laws, if they had supposed that they had extended an invitation to the pioneer population to acquire inchoate rights to the public lands by trespass, by violence, by robbery, by acts leading to homicides, and other crimes of less moral turpitude.

We have not been able to find any decision of the courts directly in point on this question. But in the case of the *United States* v. *Stanley* (6 McLean, 409), Mr. Justice McLean gave expression to the opinion, that, where a man was engaged in erecting a house in order to make a pre-emption claim to lands purchased of the Miami Indians, another person, who by force turned him out of the house, and having finished it took up his residence there, could not by that proceeding acquire a valid settlement, unless the other party voluntarily withdrew all claim to the property. The case in regard to the trespass is very like the one before us, and though the validity of the entry of the trespasser was only remotely in question, the remark of the learned justice, who was familiar with the laws regulating the sales of public lands, is entitled to respect.

So, also, in the case of *Frisbie* v. *Whitney*, before mentioned, this court said, that while it was not necessary to decide it, there were serious difficulties in regard to complainant's right to make a valid pre-emption by a forcible intrusion upon land cultivated, enclosed, and peaceably occupied by another man.

In the present case, we are met with that question directly in our way, and we are of opinion that it cannot be done.

It follows that the defendants could not have made any lawful entry on the lands where the hay was cut in this case; that no law existed which gave them any right to make such an entry; that they were mere naked trespassers, making an unwarranted intrusion upon the enclosure of another, — an enclosure and occupation of years, on which time and labor and money had been expended, — and that in such a wrongful attempt to seize the fruits of other men's labor there could be no *bona fide* claim of right whatever. The instruction of the court that this could be done, founded on an erroneous view of the pre-emption law, was itself erroneous, and the judgment founded on it must be reversed.

The judgment of the Supreme Court of California will, therefore, be reversed, and the case remanded with instruction to order a new trial, and for further proceedings in conformity with this opinion; and it is

So ordered.

MR. CHIEF JUSTICE WAITE, with whom concurred Mr. JUSTICE CLIFFORD, dissenting.

I dissent from this judgment. It is not claimed that, when the defendants entered, Page had title to the lands on which the hay was cut. After the judgment of this court in *United States* v. *Vallejo* (1 Black, 541), against the validity of the "Soscol" grant, the lands became public lands of the United States; and the occupancy of Page from that time, covering as it did a tract of more than eight hundred acres, did not, in my opinion, prevent a peaceable entry by the defendants, in good faith, for the purposes of pre-emption. The case was fairly put to the jury upon that question.

RAILROAD COMPANY v. RICHMOND.

1. The ordinance of the council of the city of Richmond, passed Sept. 8, 1873, that "no car, engine, carriage, or other vehicle of any kind belonging to or used by the Richmond, Fredericksburg, and Potomac Railroad Company shall be drawn or propelled by steam upon that part of their railroad or railway track on Broad Street, east of Belvidere Street, in said city," does not impair any vested right of the company, under its charter, granted Feb. 25, 1834, nor deprive it of its property without due process of law, nor deny it the equal protection of the laws.
2. The appropriate regulation of the use of property is not "taking" it, within the meaning of the constitutional prohibition.

ERROR to the Supreme Court of Appeals of the State of Virginia.

The Richmond, Fredericksburg, and Potomac Railroad Company was incorporated Feb. 25, 1834, by the legislature of the State of Virginia, "for the purpose of making a railroad from some point within the corporation of Richmond, to be approved by the common council, to some point within the corporation of Fredericksburg" (charter, sect. 1), and was authorized (sect. 24) "to place on the railroad constructed . . . all machines, wagons, vehicles, carriages, and teams of any description whatsoever, . . . necessary or proper for the purposes of transportation." It was required at all times to transport persons and property from one point to another along the line of its road, when completed, upon payment or tender of the tolls allowed by the charter. Sect. 26.

At the time of the incorporation of the company, locomotive engines were in use within the State of Virginia, upon a railroad extending from the Roanoke to Petersburg; and the city of Richmond was a municipal corporation, having power "to make and establish such by-laws, rules, and ordinances, not contrary to the Constitution or laws of the Commonwealth, as shall . . . be thought necessary for the good ordering and government of such persons as shall from time to time reside within the limits of said city or corporation, or shall be concerned in interest therein." 1 Hening Stat. 46, sect. 2.

On the 22d of December, 1834, the president and directors of the railroad company passed the following preamble and resolution: —

"Whereas, by the act incorporating this company, it is requisite that the point at which the railroad terminates within the corporation of Richmond should be approved by the common council, and it appears to the board most expedient to conduct the same from the Richmond turnpike along H [Broad] Street to a point at or near the intersection of the said street and Eighth Street, and for the present to terminate the same by suitable connections with the contemplated warehouses and workshops of the company on lots Nos. 477 and 478, purchased by them from John Heth: Therefore, be it

"*Resolved*, that the approbation of the common council be requested to the above plan."

On the 23d of the same month, the common council of the city passed the following: —

"Whereas, by a resolution of the president and directors of the Richmond, Fredericksburg, and Potomac Railroad Company, submitted to the common council, it appears it is deemed most expedient by the said president and directors to conduct the said railroad from the Richmond turnpike along H [Broad] Street to a point at or near the intersection of the said street and Eighth Street, and for the present to terminate the same by suitable connections with the contemplated warehouses and workshops of the company on lots Nos. 477 and 478, purchased by them from John Heth.

"*Resolved*, that the common council do approve the proposed location of the said railroad and the present termination of the same, as described in the foregoing resolution, and authorize the prosecution of the said work within the limits of the city on the above location: *Provided*, that in locating the said railroad no injury shall be done to the water-pipes now laid in and along said street: *Provided*, that the corporation of Richmond shall not be considered as hereby parting with any power or chartered privilege not necessary to the railroad company for constructing the said railroad, and connecting the same with the depot of said company within the limits of the city."

The railroad company then proceeded with the construction of its road, which was completed and ready for use within the city on the 15th of February, 1836. Shortly before that day, a meeting was held by some of the residents of Shockhoe Hill, at which resolutions were passed, declaring that in the opinion of the meeting the company should not be permitted to use loco-

motive power for propelling cars within the city, and that it "should be required to construct and keep in good order a free access and passing at all points from the one side of H [Broad] Street to the other." These resolutions were presented to the council, and referred to the street commissioners with instructions to ascertain and report what injury had been done to the street by laying down the railroad in it, and also what were the future plans of the company, so far as they related to the use of the road, and the probable result to the citizens resident and owning property on the street, by the execution of the plans and operations of the company.

This action of the council was communicated to the company on the day it commenced the business of transportation over the road; and, in reply, the president and directors made a statement, of which the following is part: —

"The railroad having been made along H [Broad] Street from a point approved by the common council, the president and directors, under power given by the act of incorporation, have purchased and placed on the railroad a locomotive engine and other machines proper for the purposes of transportation. Their plan, so far as the same relates to travel on said road on H [Broad] Street, is to have the cars drawn by a locomotive. It has occurred to them that it might not be prudent for the locomotive to go so fast within the corporation as it will after leaving the city, and accordingly they have adopted a resolution directing their engineer not to suffer the locomotive, while in the city, to proceed at a rate exceeding three miles per hour."

Then follows a statement of the plan they had adopted for facilitating the crossing of the track in the street, and the reasons for it.

Upon the receipt of this communication from the company, the council adopted resolutions instructing the commissioners of streets to inquire into the expediency of paving H [Broad] Street, and to ascertain from the company whether they would pay part of the expense attending it. After a correspondence between the commissioners of streets and the committee of the company, showing the views of each side, the city surveyor was instructed by the commissioners of streets "to prepare and submit a plan, the most judicious to be adopted, for paving H

[Broad] Street, . . . having a regard as well to the just rights and interests of the city as to those of the railroad company in the use of said street." The city surveyor accordingly submitted a report, in which, after setting forth the inconveniences which would result to the railroad company by "a uniform pavement on a level with the top of the plates of the railroad," submitted a plan "as a compromise of interests." This plan was finally adopted by both parties and the work done, the railroad company, by arrangement, paying one-third the expense. That ended all action upon the resolutions adopted at the meeting of residents on Shockhoe Hill. The amount paid by the railroad company towards the paving was near $7,000.

At different times after this, applications were made to the council to prohibit the use of locomotives in the street; but the council, while asserting its right to do so, declined to take action in the matter, upon the ground that it was not expedient. Ordinances were, however, passed regulating the speed of trains and providing against standing cars in the street.

On the 24th of May, 1870, an amendment was made to the charter of the city, and the council empowered "to determine and designate the route and grade of any railroad to be laid in said city, and to restrain and regulate the rate of speed of locomotives, engines, and cars upon the railroad within the said city, and . . . exclude the said engines and cars, if they pleased, provided no contract be thereby violated." Acts of 1869–70, p. 125.

On the 8th of September, 1873, after the main line of the railroad had been changed to another route, and negotiations for the sale of the depot property by the company to the city had failed, the council passed an ordinance, as follows: —

"SECT. 3. That on and after the first day of January, 1874, no car, engine, carriage, or other vehicle of any kind belonging to or used by the Richmond, Fredericksburg, and Potomac Railroad Company, shall be drawn or propelled by steam upon that part of their railroad or railway track on Broad Street east of Belvidere Street in said city. The penalty for failing to comply with this section shall be a fine of not less than $100 nor more than $500 for each and every offence, to be recovered before the police justice of the city of Richmond."

On the 2d of January, 1874, this action was commenced to recover the penalty incurred under that ordinance for running a locomotive propelled by steam in the street. There was no dispute as to the facts; but the defence relied upon was, that the ordinance was unconstitutional and void, because, — 1, It impaired the obligations of the contract contained in the charter of the company, which, as was claimed, granted to the company the right to propel its cars by steam, as well within the city as without; 2, it deprived the company of its property without due process of law; and, 3, it denied the company the equal protection of the laws.

This defence having been overruled, and judgment given against the company by the police justice, the case was taken by writ of error, first, to the Circuit Court of the city, and, second, to the Supreme Court of Appeals of the State, in both of which courts the judgment below was affirmed. The judgment of the Court of Appeals is now here for review, under sect. 709 of the Revised Statutes, and the errors assigned present the same questions that were relied upon in defence below.

Mr. Conway Robinson and *Mr. Leigh Robinson* for the plaintiff in error.

1. The ordinance of the city council of Richmond, prohibiting the use of locomotive engines on the railroad of the plaintiff in error on Broad Street impairs the obligation of the contract contained in the charter of the company granted by the legislature of the State of Virginia. Cooley, Const. Lim. 87, 88, 274, 279; *People* v. *Draper*, 15 N. Y. 532; *Trustees of Dartmouth College* v. *Woodward*, 4 Wheat. 519; *Planters' Bank* v. *Sharp*, 6 How. 301; *Fletcher* v. *Peck*, 6 Cranch, 87; *Terrett* v. *Taylor*, 9 id. 43; *New Jersey* v. *Wilson*, 7 id. 164; *Gordon & Chester* v. *Appeal Tax Court*, 3 How. 133; *State Bank of Ohio* v. *Knoop*, 16 id. 369; *City of Richmond* v. *Richmond & Danville Railroad Co.*, 21 Gratt. (Va.) 604; *State* v. *Noyes*, 47 Me. 189; *O'Connor* v. *Pittsburgh*, 18 Pa. St. 187; *James River & Kanawha Canal Co.* v. *Anderson et al.*, 12 Leigh (Va.), 278; *McLauchlin* v. *Railroad Co.*, 5 Rich. (S. C.) 596; *Hammersmith & City Railway Co.* v. *Brand*, 4 Law Rep. H. L. 738; *Enfield Tollbridge Co.* v. *Hartford & New Haven Railroad Co.*, 17 Conn. 454; *Black* v. *Phila-*

delphia & Reading Railroad Co., 58 Pa. St. 249; *Vaughan* v. *Taff Vale Railway Co.*, 5 H. & N. 678; *Mercer* v. *Pittsburg, Fort Wayne, & Chicago Railroad Co.*, and *Commonwealth* v. *Same*, 36 Pa. St. 99; *New Jersey Railroad & Transportation Co.* v. *Jersey City*, 29 N. J. L. 170.

To justify the exercise, even by the State, of any such police power, so as to impair the franchise conferred by her legislative contract, there must be not only compensation made to the company, but also unquestionable proof that its exercise is necessary for the protection of the lives and property of its citizens from certain and imminent danger. *Black* v. *Philadelphia & Reading Railroad Co.*, 58 Pa. St. 249; *Drake* v. *Hudson River Railroad Co.*, 7 Barb. (N. Y.) 508; *Commonwealth* v. *Erie & North-East Railroad Co.*, 27 Pa. St. 339; *Mifflin* v. *Railroad Company*, 16 Pa. St. 182; *Philadelphia & Trenton Railroad Co.*, 6 Whart. (Pa.) 25; *Bell* v. *Ohio & Pennsylvania Railroad Co.*, 25 Pa. St. 161; *Lexington & Ohio Railroad Co.* v. *Applegate*, 8 Dana (Ky.), 289; *State* v. *Noyes*, 47 Me. 189; *Hentz* v. *Long Island Railroad Co.*, 13 Barb. (N. Y.) 646; *Bailey* v. *Philadelphia, &c. Railroad Co.*, 4 Harr. (Del.) 389; *Pingry* v. *Washburn*, 1 Aik. (Vt.) 264; *Miller* v. *New York & Erie Railroad Co.*, 21 Barb. (N. Y.) 513; *People* v. *Jackson & Michigan Plank Road Co.*, 9 Mich. 285; *Benson* v. *The Mayor, &c.*, 10 Barb. (N. Y.) 223.

2. That ordinance also impairs the obligation of the contract between the city and the company. *Mercer* v. *Pittsburg, Fort Wayne, & Chicago Railroad Co.*, 36 Pa. St. 99; *State* v. *Noyes*, 47 Me. 189.

3. The ordinance is unconstitutional and void, because, assuming to act under authority of the State, the council thereby "denies" to the plaintiff in error that "equal protection of the laws" guaranteed to it in the Fourteenth Amendment of the Constitution of the United States. *Fletcher* v. *Peck*, 6 Cranch, 87; *Calder* v. *Bull*, 3 Dall. 386; *Booth* v. *Woodbury*, 32 Conn. 118; *Lin Sing* v. *Washburn*, 20 Cal. 534; *Holden* v. *James*, 11 Mass. 396; *Davison* v. *Johonnot*, 7 Metc. (Mass.) 393; *Bull* v. *Conroe*, 13 Wis. 233; *Walley's Heirs* v. *Kennedy*, 2 Yerg. (Tenn.) 554; *The King* v. *Pease*, 1 Nev. & M. 690; 4 Barn. & Adol. 30; *Vaughan* v. *Taff Vale Railway Co.*, 5 H. & N. 678; *Cleveland &*

Pittsburg Railroad Co. v. *Speer*, 56 Pa. St. 325; *Clark* v. *Mayor, &c. of Syracuse*, 13 Barb. (N. Y.) 32.

Mr. A. M. Keiley, contra.

MR. CHIEF JUSTICE WAITE, after stating the case, delivered the opinion of the court.

The questions for determination in this case are: —

1. Does the municipal legislation complained of impair the vested rights of the company under its charter?

In answering this question, it becomes necessary to determine at the outset what the rights of the company, secured by its charter and affected by the ordinance in dispute, actually are. The right is granted the company to construct a railroad "from some point within the corporation of Richmond, to be approved by the common council." No definite point is fixed by the charter. That is left to the discretion of the company, subject only to the approval of the city. The power to approve certainly implies the power to reject one location and accept another; and this necessarily carries with it the further power to reserve such governmental control over the company in respect to the road, when built within the city to the point approved, as may seem to be necessary. The absolute grant of the charter is satisfied if the road is built within the city for any distance, by any route, or to any point. The company, however, desired to pass through Broad Street, and, for the present, to terminate the road upon the lots purchased for shops and warehouses, and requested the city to approve that location. This the city was willing to do, upon condition that it should not be considered as thereby parting with any power or chartered privilege not necessary to the company for constructing its road or connecting it with the depot. These terms were proposed to the company, and accepted. At that time the city was invested with all the powers "necessary for the good ordering and government" of persons and property within its jurisdiction. By the conditions imposed, these powers were all reserved, except to the extent of permitting the company to construct its road upon the route designated, and connect it with the depot. All the usual and ordinary powers of city governments over the road when constructed, and over the company in respect to its

use, were expressly retained. The company, therefore, occupied Broad Street upon the same terms and conditions it would if the charter had located the route of the road within the city, but, in terms, subjected the company to the government of the city in respect to the use of the road when constructed.

Nothing has been done since to change the rights of the parties. It is true that an attempt was made by the residents on Shockhoe Hill to induce the council to prohibit the use of locomotives within the city, and to require the company to so construct the road within Broad Street as to facilitate the crossing of the track; but all parties seemed to be satisfied then with the proposition of the company to run its engines slowly and with care in the city, and its liberal contribution towards the expense of paving the street. There is nowhere in the proceedings an indication of a relinquishment by the city of its governmental control over the company or its property. The "compromise of interests" proposed related alone to the plan of the pavement.

It remains only to consider whether the ordinance complained of is a legitimate exercise of the power of a city government. It certainly comes within the express authority conferred by the amendment to the city charter adopted in 1870; and that, in our opinion, is no more than existed by implication before. The power to govern implies the power to ordain and establish suitable police regulations; and that, it has often been decided, authorizes municipal corporations to prohibit the use of locomotives in the public streets, when such action does not interfere with vested rights. *Donnaher* v. *The State*, 8 Smed. & M. (Miss.) 649; *Whitson* v. *The City of Franklin*, 34 Ind. 392.

Such prohibitions clearly rest upon the maxim *sic utere tuo ut alienum non lædas*, which lies at the foundation of the police power; and it was not seriously contended upon the argument that they did not come within the legitimate scope of municipal government, in the absence of legislative restriction upon the powers of the municipality to that effect. It is not for us to determine in this case whether the power has been judiciously exercised. Our duty is at an end if we find that it exists. The judgment of the court below is final as to the reasonableness of the action of the council.

We conclude, therefore, that the ordinance does not impair any vested right conferred upon the company by its charter.

2. Does it deprive the company of its property without due process of law?

This question is substantially disposed of by what has already been said, as the claim of the company is based entirely upon the assumption of a vested right, under its charter, to operate its road by steam, both within and without the city, which we have endeavored to show is not true. All property within the city is subject to the legitimate control of the government, unless protected by "contract rights," which is not the case here. Appropriate regulation of the use of property is not "taking" property, within the meaning of the constitutional prohibition.

3. Does it deny the company the equal protection of the laws?

The claim is, that, as this company is alone named in the ordinance, the operation of the ordinance is special only, and, therefore, invalid. No other person or corporation has the right to run locomotives in Broad Street. Consequently, no other person or corporation is or can be in like situation, except with the consent of the city. On this account, the ordinance, while apparently limited in its operation, is in effect general, as it applies to all who can do what is prohibited. Other railroad companies may occupy other streets and use locomotives there, but other streets may not be situated like Broad Street, neither may there be the same reasons why steam transportation should be excluded from them. All laws should be general in their operation, but all places within the same city do not necessarily require the same local regulation. While locomotives may with very great propriety be excluded from one street, or even from one part of a street, it would be sometimes unreasonable to exclude them from all. It is the special duty of the city authorities to make the necessary discriminations in this particular.

On the whole, we see no error in the record, and the judgment is

Affirmed.

MR. JUSTICE STRONG dissented.

MOORE v. ROBBINS.

1. A patent for public land, when issued by the Land Department, acting within the scope of its authority, and delivered to and accepted by the grantee, passes the legal title to the land. All control of the Executive Department of the government over the title thereafter ceases.
2. If there be any lawful reason why the patent should be cancelled or rescinded, the appropriate remedy is by a bill in chancery, brought by the United States, but no executive officer is authorized to reconsider the facts on which it was issued, and to recall or rescind it, or to issue one to another party for the same tract.
3. But when fraud or mistake or misconstruction of the law of the case exists, the United States, or any contesting claimant for the land, may have relief in a court of equity.
4. Under sect. 14 of the act of 1841 (5 Stat. 457), and the act of March 3, 1853 (10 id. 244), no pre-emption claim was of any avail against a purchaser of the land at the public sales ordered by the proclamation of the President, unless, before they commenced, the claimant had proved up his settlement and paid for the land.
5. The decision of the Secretary of the Interior, against a purchaser at the public sales, in favor of a pre-emption claimant who had failed to make the required proof and payment, was erroneous, as a misconception of the law and the equitable title should be decreed to belong to the purchaser

ERROR to the Supreme Court of the State of Illinois.

The facts are stated in the opinion of the court.

Mr. Philip Phillips for the plaintiff in error.

Mr. R. E. Williams, contra.

MR. JUSTICE MILLER delivered the opinion of the court.

This case is brought before us by a writ of error to the Supreme Court of the State of Illinois.

In its inception, it was a bill in the Circuit Court for De Witt County, to foreclose a mortgage given by Thomas I. Bunn to his brother Lewis Bunn, on the south half of the south-east quarter and the south half of the south-west quarter of section 27, township 19, range 3 east, in said county. In the progress of the case, the bill was amended so as to allege that C. H. Moore and David Davis set up some claim to the land; and they were made defendants, and answered.

Moore said that he was the rightful owner of forty acres of the land mentioned in the bill and mortgage, to wit, the south-west

quarter of the south-west quarter of said section, and had the patent of the United States giving him the title to it.

Davis answered that he was the rightful owner of the south-east quarter of said south-west quarter of section 27. He alleges that John P. Mitchell bought the land at the public sale of lands ordered by the President for that district, and paid for it, and had the receipt of the register and receiver, and that it was afterwards sold under a valid judgment and execution against Mitchell, and the title of said Mitchell came by due course of conveyance to him, said Davis.

It will thus be seen, that, while Moore and Davis each assert title to a different forty acres of the land covered by Bunn's mortgage to his brother, neither of them claim under or in privity with Bunn's title, but adversely to it.

But as both parties assert a right to the land under purchases from the United States, and since their rights depend upon the laws of the United States concerning the sale of its public lands, there is a question of which this court must take cognizance.

As regards Moore's branch of the case, it seems to us free from difficulty.

The evidence shows that the forty acres which he claims was struck off to him at a cent or two over $2.50 per acre, at a public land sale, by the officers of the land district at Danville, Ill., Nov. 15, 1855; that his right to it was contested before the register and receiver by Bunn, who set up a prior pre-emption right. Those officers decided in favor of Bunn; whereupon Moore appealed to the Commissioner of the General Land-Office, who reversed the decision of the register and receiver, and on this decision a patent for the land was issued to Moore, who has it now in his possession.

Some time after this patent was delivered to Moore, Bunn appealed from the decision of the commissioner to the Secretary of the Interior, who reversed the commissioner's decision and confirmed that of the register and receiver, and directed the patent to Moore to be recalled, and one to issue to Bunn. But Moore refused to return his patent, and the Land Department did not venture to issue another for the same land; and so there is no question but that Moore is vested now with the legal title

to the land, and was long before this suit was commenced. Nor is there, in looking at the testimony taken before the register and receiver and that taken in the present suit, any just foundation for Bunn's pre-emption claim. We will consider this point more fully when we come to the Davis branch of the case.

Taking this for granted, it follows that Moore, who has the legal title, is in a suit in chancery decreed to give it up in favor of one who has neither a legal nor an equitable title to the land.

The Supreme Court of Illinois, before whom it was not pretended that Bunn had proved his right to a pre-emption, in their opinion in this case place the decree by which they held Bunn's title paramount to that of Moore on the ground that to the officers of the Land Department, including the Secretary of the Interior, the acts of Congress had confided the determination of this class of cases; and the decision of the secretary in favor of Bunn, being the latest and the final authoritative decision of the tribunal having jurisdiction of the contest, the courts are bound by it, and must give effect to it. *Robbins* v. *Bunn*, 54 Ill. 48.

Without now inquiring into the nature and extent of the doctrine referred to by the Illinois court, it is very clear to us that it has no application to Moore's case. While conceding for the present, to the fullest extent, that when there is a question of contested right between private parties to receive from the United States a patent for any part of the public land, it belongs to the head of the Land Department to decide that question, it is equally clear that when the patent has been awarded to one of the contestants, and has been issued, delivered, and accepted, all right to control the title or to decide on the right to the title has passed from the land-office. Not only has it passed from the land-office, but it has passed from the Executive Department of the government. A moment's consideration will show that this must, in the nature of things, be so. We are speaking now of a case in which the officers of the department have acted within the scope of their authority. The offices of register and receiver and commissioner are created mainly for the purpose of supervising the sales of the public

lands; and it is a part of their daily business to decide when a party has by purchase, by pre-emption, or by any other recognized mode, established a right to receive from the government a title to any part of the public domain. This decision is subject to an appeal to the secretary, if taken in time. But if no such appeal be taken, and the patent issued under the seal of the United States, and signed by the President, is delivered to and accepted by the party, the title of the government passes with this delivery. With the title passes away all authority or control of the Executive Department over the land, and over the title which it has conveyed. It would be as reasonable to hold that any private owner of land who has conveyed it to another can, of his own volition, recall, cancel, or annul the instrument which he has made and delivered. If fraud, mistake, error, or wrong has been done, the courts of justice present the only remedy. These courts are as open to the United States to sue for the cancellation of the deed or reconveyance of the land as to individuals; and if the government is the party injured, this is the proper course.

"A patent," says the court in *United States* v. *Stone* (2 Wall. 525), "is the highest evidence of title, and is conclusive as against the government and all claiming under junior patents or titles, until it is set aside or annulled by some judicial tribunal. In England, this was originally done by *scire facias;* but a bill in chancery is found a more convenient remedy." See also *Hughes* v. *United States*, 4 Wall. 232; s. c. 11 How. 552.

If an individual setting up claim to the land has been injured, he may, under circumstances presently to be considered, have his remedy against the party who has wrongfully obtained the title which should have gone to him.

But in all this there is no place for the further control of the Executive Department over the title. The functions of that department necessarily cease when the title has passed from the government. And the title does so pass in every instance where, under the decisions of the officers having authority in the matter, a conveyance, generally called a patent, has been signed by the President, and sealed, and delivered to and accepted by the grantee. It is a matter of course that, after this is done, neither the secretary nor any other executive officer

can entertain an appeal. He is absolutely without authority. If this were not so, the titles derived from the United States, instead of being the safe and assured evidence of ownership which they are generally supposed to be, would be always subject to the fluctuating, and in many cases unreliable, action of the land-office. No man could buy of the grantee with safety, because he could only convey subject to the right of the officers of the government to annul his title.

If such a power exists, when does it cease? There is no statute of limitations against the government; and if this right to reconsider and annul a patent after it has once become perfect exists in the Executive Department, it can be exercised at any time, however remote. It is needless to pursue the subject further. The existence of any such power in the Land Department is utterly inconsistent with the universal principle on which the right of private property is founded.

The order of the Secretary of the Interior, therefore, in Moore's case, was made without authority, and is utterly void, and he has a title perfect both at law and in equity.

The question presented by the forty acres claimed by Davis is a very different one. Here, although the government has twice sold the land to different persons and received the money, it has issued no patent to either, and the legal title remains in the United States. It is not denied, however, that to one or the other of the parties now before the court this title equitably belongs; and it is the purpose of the present suit to decide that question.

The evidence shows that on the same day that Moore bought at the public land sale the forty acres we have just been considering, Mitchell bought in like manner the forty acres now claimed by Davis; to wit, Nov. 15, 1855. He paid the sum at which it was struck off to him at public outcry, and received the usual certificate of purchase from the register and receiver. On the twentieth day of February, 1856, more than three months after Mitchell's purchase, Thomas I. Bunn appeared before the same register and receiver, and asserted a right, by reason of a pre-emption commenced on the eighth day of November, 1855, to pay for the south half of the south-west quarter and the south half of the south-east quarter of section 27, which includes both the land of Moore and Davis in controversy in

this suit, and to receive their certificates of purchase. They accepted his money and granted his certificate. A contest between Bunn on the one side, and Moore and Mitchell on the other, as to whether Bunn had made the necessary settlement, was decided by those officers in favor of Bunn; and on appeal, as we have already shown, to the commissioner, this was reversed, and finally the Secretary of the Interior, reversing the commissioner, decided in favor of Bunn. But no patent was issued to Mitchell after the commissioner's decision, as there was to Moore; and the secretary, therefore, had the authority, undoubtedly, to decide finally for the Land Department who was entitled to the patent. And, though no patent has been issued, that decision remains the authoritative judgment of the department as to who has the equitable right to the land.

The Supreme Court of Illinois, in their opinion in this case, come to the conclusion that this final decision of the secretary is not only conclusive on the department, but that it also excludes all inquiry by courts of justice into the right of the matter between the parties.

The whole question, however, has been since that time very fully reviewed and considered by this court in *Johnson* v. *Towsley*, 13 Wall. 72. The doctrine announced in that case, and repeated in several cases since, is this: —

That the decision of the officers of the Land Department, made within the scope of their authority on questions of this kind, is in general conclusive everywhere, except when reconsidered by way of appeal within that department; and that as to the facts on which their decision is based, in the absence of fraud or mistake, that decision is conclusive even in courts of justice, when the title afterwards comes in question. But that in this class of cases, as in all others, there exists in the courts of equity the jurisdiction to correct mistakes, to relieve against frauds and impositions, and in cases where it is clear that those officers have, by a mistake of the law, given to one man the land which on the undisputed facts belonged to another, to give appropriate relief.

In the recent case of *Shepley et al.* v. *Cowan et al.* (91 U. S. 340), the doctrine is thus aptly stated by Mr. Justice Field: "The officers of the Land Department are specially designated

by law to receive, consider, and pass upon proofs presented with respect to settlements upon the public lands, with a view to secure rights of pre-emption. If they err in the construction of the law applicable to any case, or if fraud is practised upon them, or they themselves are chargeable with fraudulent practices, their rulings may be reviewed and annulled by the courts when a controversy arises between private parties founded upon their decisions; but, for mere errors of judgment upon the weight of evidence in a contested case before them, the only remedy is by appeal from one officer to another of the department."

Applying to the case before us these principles, which are so well established and so well understood in this court as to need no further argument, we are of opinion, if we take as proved the sufficiency of the occupation and improvement of Bunn as of the date which he alleged, his claim is fatally defective in another respect in which the officers of the Land Department were mistaken as to the law which governed the rights of the parties, or entirely overlooked it.

In the recent case of *Atherton* v. *Fowler* (*supra*, p. 513), we had occasion to review the general policy and course of the government in disposing of the public lands, and we stated that it had formerly been, if it is not now, a rule of primary importance to secure to the government the highest price which the land would bring by offering it publicly at competitive sales, before a right to any part of it could be established by private sale or by pre-emption. In the enforcement of this policy, the act of Sept. 14, 1841, which for the first time established the general principle of pre-emption, and which has remained the basis of that right to this day, while it allowed persons to make settlements on the public lands as soon as the surveys were completed and filed in the local offices, affixed to such a settlement two conditions as affecting the right to a pre-emption. One of these was that the settler should give notice to the land-office of the district, within thirty days after settlement, of his intention to exercise the right of pre-emption, and the other we will give in the language of the fourteenth section of that act: —

"This act shall not delay the sale of any of the public lands of the United States beyond the time which has been or may be appointed by the proclamation of the President, nor shall any of the provi-

sions of this act be available to any person who shall fail to make the proof of payment and file the affidavit required, before the commencement of the sale aforesaid." 5 Stat. 457.

There can be no misconstruction of this provision, nor any doubt that it was the intention of Congress that none of the liberal provisions of that act should stand in the way of a sale at auction of any of the public lands of a given district where the purchase had not been completed by the payment of the price before the commencement of the sales ordered by the President's proclamation. We do not decide, because we have not found it necessary to do so, whether this provision is applicable under all the pre-emption laws passed since the act of 1841, though part of it is found in the Revised Statutes, sect. 2282, as part of the existing law. But we have so far examined all those laws enacted prior to November, 1855, the date of Mitchell's purchase, as to feel sure it was in full operation at that time. The act of March 3, 1853, extending the right of pre-emption to the alternate sections, which the government policy reserved in its numerous grants to railroads and other works of internal improvement, required the pre-emptor to pay for them at $2.50 per acre, before they should be offered for sale at public auction. 10 Stat. 244. This was only two years and a half before these lands were sold to Mitchell, and they were parts of an alternate section reserved in a railroad grant. That statute, in its terms, was limited to persons who had already settled on such alternate sections, and it may be doubted whether any right of pre-emption by a settlement made afterwards existed under the law. But it is unnecessary to decide that point, as it is beyond dispute that it required in any event that the money should be paid before the land was offered for sale at public auction.

The record of this case shows that, while Bunn's pre-emption claim comes directly within the provision of both statutes, they were utterly disregarded in the decision of the Secretary of the Interior, on which alone his case has any foundation.

We have no evidence in this record at what time the President's proclamation was issued, or when the sales under it began at which Mitchell purchased. These proclamations are not published in the statutes as public laws, and this one is not

mentioned in the record. But we know that the public lands are never offered at public auction until after a proclamation fixing the day when and the place where the sales begin. The record shows that both Moore and Mitchell bought and paid for the respective forty-acre pieces now in contest, at public auction. That they were struck off to them a few cents in price above the minimum of $2.50, below which these alternate sections could not be sold, and that this was on the fifteenth day of November, 1855. These public sales were going on then on that day, and how much longer is not known, but it might have been a week, or two weeks, as these sales often continue open longer than that.

Bunn states in his application, made three months after this, that his settlement began on the 8th of November, 1855. It is not apparent from this record that he ever gave the notice of his intention to pre-empt the land, by filing what is called a declaration of that intention in the land-office. There is a copy of such a declaration in the record accompanying the affidavit of settlement, cultivation, and qualification required of a pre-emptor, which last paper was made and sworn to Feb. 20, 1856, when he proved up his claim, and paid for and received his certificate. There is nothing to show when the declaration of intention was filed in the office.

Waiving this, however, which is a little obscure in the record, it is very clear that Bunn "failed to make proof of payment, and failed to file the affidavit of settlement required, before the commencement of the sale" at which Mitchell bought. The statute declares that none of the provisions of the act shall be available to any person who fails to do this. The affidavit and payment of Bunn were made three months after the land sales had commenced, and after these lands had been sold.

The section also declares that the act shall not delay the sale of any public land beyond the time which has been or may be appointed by the proclamation of the President. To refuse Mitchell's bid on account of any supposed settlement, even if it had been brought to the attention of the officers, would have been to delay the sale beyond the time appointed, and would, therefore, have been in violation of the very statute under which Bunn asserts his right.

Whatever Bunn may have done on the 8th of November, and up to the 15th of that month, in the way of occupation, settlement, improvement, and even notice, could not withdraw the land from sale at public auction, unless he had also paid or offered to pay the price before the sales commenced.

It seems quite probable that such attempt at settlement as he did make was made while the land sales were going on, or a few days before they began, with the purpose of preventing the sale, in ignorance of the provision of the statute which made such attempt ineffectual.

At all events, we are entirely satisfied that the lands in controversy were subject to sale at public auction at the time Moore and Mitchell bid for and bought them; that the sale so made was by law a valid one, vesting in them the equitable title, with right to receive the patents; and that the subsequent proceedings of Bunn to enter the land as a pre-emptor were unlawful and void.

It was the duty of the court in Illinois, sitting as a court of equity, to have declared that the mortgage made by Bunn, so far as these lands are concerned, created no lien on them, because he had no right, legal or equitable, to them.

The decree of the Supreme Court of that State must be reversed, and the cause remanded to that court for further proceedings in accordance with this opinion; and it is

So ordered.

NATIONAL BANK v. WARREN.

The mere non-resistance of a debtor to judicial proceedings in which a judgment was rendered against him, when the debt was due and there was no valid defence to it, is not the suffering and giving a preference under the Bankrupt Act; and the judgment is not avoided by the facts, that he does not file the petition in bankruptcy, and that his insolvency was known to the creditor

APPEAL from the Circuit Court of the United States for the Southern District of New York.

The Tenth National Bank of New York, having an undis

puted debt against the firm of Sanger & Co., of about $10,000, endeavored to obtain its money by persuasion, but received only fair words in return. After pursuing this policy for several months, it brought suit against the debtors, Nov. 3, 1870. They received delay and indulgence in its prosecution, and judgment was rendered against them on the 12th of January, 1871. Execution was issued on that day, and a levy made upon their property. Yielding again to their solicitations, the bank did not press an immediate sale under the execution, and on the 24th of February, 1871, bankruptcy proceedings were commenced by their other creditors. The sale upon the execution was stayed by an injunction in the present suit, which was instituted by Warren & Rowe, assignees in bankruptcy of Sanger & Co., to set aside the judgment and execution as fraudulent and void.

This injunction was afterwards modified by allowing a sale, and directing the sheriff to hold the proceeds subject to the order of the court.

The District Court ultimately dismissed the bill with costs. That decree having, on appeal, been reversed by the Circuit Court, the bank brought the case here.

Mr. A. J. Vanderpoel for the appellant.

This case is, in substance, identical with *Wilson* v. *City Bank*, 17 Wall. 473.

There is no evidence whatever of any intent to give the bank a preference. *Partridge* v. *Dearborn*, 2 Low. 286; *Hoover* v. *Greenbaum*, 61 N. Y. 305; *Sleek* v. *Turner*, 76 Pa. St. 142; *Henkelman* v. *Smith*, 42 Md. 164.

Mr. Austen G. Fox, contra.

This case comes within the class of cases represented by *Buchanan* v. *Smith* (16 Wall. 277), and not that represented by *Wilson* v. *City Bank* (17 id. 473).

The liens obtained by the bank were a preference, and therefore void as against the assignees in bankruptcy.

MR. JUSTICE HUNT, after stating the case, delivered the opinion of the court.

This action goes upon the theory that the mere non-resistance of a debtor to judicial proceedings against him, when the debt is due and there is no valid defence to it, is the suffering

and giving a preference under the Bankrupt Act. This theory is expressly repudiated in the case of *Wilson* v. *City Bank*, 17 Wall. 473. It is also held in that case that the facts that the debtor does not himself file the petition in bankruptcy under such circumstances, and that the creditor was aware of the insolvency of the debtor, do not avoid the judgment and execution. In the present case, there is not proven a single fact or circumstance tending to show a concurrence or aid on the part of the debtors in obtaining the judgment or securing the payment of the debt. Their only effort was to obtain delay, apparently in the hope of relief from the embarrassments which finally overwhelmed them.

The decree of the Circuit Court must be reversed, and that of the District Court, dismissing the bill with costs, affirmed; and it is

So ordered.

WOLF v. STIX.

A decree dismissing a bill in chancery brought to recover a debt and set aside an alleged fraudulent sale of property, was, on appeal, reversed, and a decree rendered by the Supreme Court of the State against the appellee for the amount of the debt, and an execution awarded. Thereupon the appellee, who, pending the appeal, and more than three years before the date of the decree, had obtained a discharge in bankruptcy, petitioned the Supreme Court to set aside its decree, and either permit him to plead his discharge there, or remand the cause, so that he might plead it in the inferior court. The court, upon the ground that no new defence could be made there, refused the petition, and permitted the decree to stand as entered. *Held*, 1. That upon the face of the record proper no Federal question was raised. 2. That the action upon the subsequent petition did not place the petitioner in a better position to invoke the jurisdiction of this court.

MOTION to dismiss a writ of error to the Supreme Court of the State of Tennessee.

Mr. Josiah Patterson, for the defendant in error, in support of the motion.

Mr. William M. Randolph, *contra*.

MR. CHIEF JUSTICE WAITE delivered the opinion of the court.

This was a bill in chancery, filed by Louis Stix & Co. in the

Chancery Court of Shelby County, Tennessee, in accordance with the laws and practice of that State, against Marks, Pump, & Co. and M. Wolf, to recover a debt due them from Marks, Pump, & Co., and to set aside a sale of goods by the latter firm to Wolf, because, as alleged, it was made to defraud creditors. A writ of attachment was sued out upon this bill, and the goods were attached in the possession of Wolf.

By the Code of Tennessee (sect. 3509), the defendants to an attachment suit may replevy the property attached by giving bond, with good security, payable to the plaintiff, in double the amount of the plaintiff's demand, or, at the defendant's option, in double the value of the property attached, conditioned to pay the debt, interest, and cost, or the value of the property attached, with interest, as the case may be, in the event he shall be cast in the suit; and in such case (sect. 3514), the court may enter judgment or decree upon the bond, in the event of a recovery by the plaintiff, against the defendant and his sureties, for the penalty of the bond, to be satisfied by the delivery of the property or its value, or payment of the recovery.

Wolf replevied the property attached in this case, claiming to be the owner, and gave a replevin bond with Lowenstein and Helman as his sureties, in which the goods were valued at $10,000. In December, 1872, the Chancery Court decided that there was no fraud in the sale to Wolf; and Marks, Pump, & Co. having been discharged in bankruptcy from their debt, the bill was dismissed. From this decree Stix & Co. appealed, March 21, 1873, to the Supreme Court. March 28, 1874, Wolf obtained a discharge in bankruptcy from his debts. April 28, 1877, the Supreme Court reversed the decree of the Chancery Court in the suit of Stix & Co., and entered a decree against Wolf, and Lowenstein and Helman as his sureties in the replevin bond, for $16,200, the value of the goods and interest, and awarded execution thereon. May 3, 1877, Wolf and his sureties petitioned the court to set aside this decree, and permit them to come in and plead in that court the discharge of Wolf, or, if that could not be done, to remand the cause, after reversing the decree below, so that the defence might be made in the Chancery Court; but the Supreme Court being of the opinion that no new defence could be made in

that court, and that it was not allowable to set up the defence in bankruptcy by any proceeding there for that purpose, refused the petition, and permitted the decree to stand as already entered.

From this statement of the case it is apparent that no Federal question was actually decided by the court below, and that none was involved in the decision as made. The discharge in bankruptcy was granted more than three years before the action of the Supreme Court which is complained of, and no attempt was made to bring it to the attention of that court until after a decree had been entered in the cause. Upon the face of the record proper, therefore, no Federal question could have been decided, because none was raised.

But upon the case as made by the subsequent petition to set aside the decree the parties occupy no better position, because the court did not decide that the discharge was inoperative as a release of the obligation involved in the suit, but only that the defence of a discharge in bankruptcy after the decree below could not be set up in the Supreme Court, as no new defence could be made there. Such a defence may be made in Tennessee by bill in chancery after the decree in the Supreme Court, but not by the suggestion of the fact in that court. It was so decided in *Anderson* v. *Reaves*, at the January Term, 1877, of the Supreme Court of that State, as is shown by a copy of the opinion printed with the brief filed on behalf of the defendant in error in support of this motion. Thus it appears that even upon this motion no Federal question was actually decided, and that, according to the law of Tennessee, none was involved. We see no reason why, according to the practice in that State, the plaintiffs in error are not still at liberty to enforce the discharge in bankruptcy against the decree of the Supreme Court by bill in chancery.

Writ dismissed.

INSURANCE COMPANY v. MOWRY.

1. The only case where a representation as to the future can operate as an estoppel is where it relates to the purposed abandonment of an existing right, and was intended to influence, and has influenced, the conduct of the party to whom it was made. A promise as to future action, touching a right dependent upon a contract to be thereafter entered into, does not create an estoppel.
2. The promise of an insurance company, that if a party will take out a policy he shall be notified when to pay the annual premiums before he shall be required to pay them, will not, although such notice is not given, estop the company from setting up the forfeiture which, according to the terms of the policy subsequently accepted, was incurred on the non-payment of the premium when due.
3. The policy issued by the company and accepted by the assured must, in a court of law, be taken as expressing the final agreement of the parties, and as merging all previous verbal stipulations.
4. The court in this case holds that the authority of the local agent of the company was limited to countersigning the policy and receiving the premiums.

ERROR to the Circuit Court of the United States for the District of Rhode Island.

This was an action by Daniel A. Mowry, upon a policy of insurance for the sum of $10,000, issued to him, for his sole benefit, by the Union Mutual Life Insurance Company,—a corporation created by the laws of Maine,—upon the life of Nelson H. Mowry.

The facts of the case and the instructions to the jury are stated in the opinion of the court.

The concluding clause of the policy is as follows: "But the same [the policy] shall not be binding until countersigned and delivered by John Shepley, agent at Providence, R. I., nor until the advance premium is paid."

There was a verdict for the plaintiff; and, judgment having been rendered thereon, the defendant sued out this writ of error.

Mr. Benjamin F. Thurston and *Mr. Charles H. Parkhurst* for the plaintiff in error.

The representations of Shepley, relating to the rights and liabilities of the parties to a contract to be executed *in futuro*, are not matter of estoppel; but, if they were, there must be proof that the company authorized him to make them, or subse-

quently ratified them. There was no such proof. The only ratification is contained in the last clause of the policy, and his authority is there expressly limited to countersigning and delivering that instrument and receiving the premium. His promise that the company would give timely notice to the plaintiff when the premiums were due did not bind the company, nor waive the forfeiture incurred by the non-payment of them.

The policy determines the rights of the parties; and its provisions cannot, in the absence of fraud, be defeated by the verbal agreements, or the conduct of the parties or their agents, which preceded its execution and delivery.

The instructions of the learned judge below were evidently erroneous.

Mr. J. J. Storrow, contra.

The failure of the plaintiff to pay the second premium *ad diem* was owing to the conduct of Shepley. He was the agent of the company to negotiate the contract of insurance and give validity to it by his signature, as well as to receive the premium. As no limitation of his authority was proved, the jury were warranted in inferring that none existed, and that his representations and promises which misled the plaintiff were those of the company. The latter was therefore estopped from setting up the clause of forfeiture. *Insurance Company* v. *Wilkinson*, 13 Wall. 222; *Same* v. *Mahone*, 21 id. 152; *Rockford Insurance Co.* v. *Nelson*, 75 Ill. 548; *Boos* v. *World Mutual Life Insurance Co.*, Thomp. & C. (N. Y.) 364; *Mayer* v. *The Mutual Life Insurance Co. of Chicago*, 38 Iowa, 304.

MR. JUSTICE FIELD delivered the opinion of the court.

This was an action on a policy of insurance, issued by the Union Mutual Life Insurance Company, a corporation created under the laws of Maine, upon the life of Nelson H. Mowry, for the sum of $10,000. The insurance was effected by a nephew of the insured, for his sole benefit. The nephew was at the time a creditor of the insured to the extent of $6,000, and had agreed to embark with him in an enterprise requiring the expenditure of considerable capital, and depending for its success upon the

knowledge and skill of the insured in business. These circumstances gave the nephew such an interest in the life of the insured as to prevent the policy from being a wager one. The insurance effected was from the 9th of March, 1867, and the policy recited the payment of the first annual premium on that day, and stipulated for the payment of the subsequent premiums on the same day of that month each year. The payment of the insurance money, after notice and proof of the death of the insured, was made dependent upon the punctual payment, each year, of the premium. The policy, in terms, declared that it was made and accepted by the insured and the nephew, upon the express condition that if the amount of any annual premium was not fully paid on the day and in the manner provided, the policy should be "null and void, and wholly forfeited." And it declared that no agent of the company, except the president and secretary, could waive such forfeiture, or alter that or any other condition of the policy.

The second premium, due on the 9th of March, 1868, was not paid, and the insured died on the 8th of April following. Forty-five days after it was due, and fifteen days after the death of the insured, this premium was tendered to the company, and was refused. The question for determination is, whether a tender of the premium at that time was sufficient to hold the company to the payment of the insurance money.

By the express condition of the policy, the liability of the company was released upon the failure of the insured to pay the premium when it matured; and the plaintiff could not recover, unless the force of this condition could in some way be overcome. He sought to overcome it, by showing that the agent, who induced him to apply for the policy, represented to him, in answer to suggestions that he might not be informed when to pay the premiums, that the company would notify him in season to pay them, and that he need not give himself any uneasiness on that subject; that no such notification was given to him before the maturity of the second premium, and for that reason he did not pay it at the time required. This representation before the policy was issued, it was contended

in the court below, and in this court, constituted an estoppel upon the company against insisting upon the forfeiture of the policy.

But to this position there is an obvious and complete answer. All previous verbal arrangements were merged in the written agreement. The understanding of the parties as to the amount of the insurance, the conditions upon which it should be payable, and the premium to be paid, was there expressed, for the very purpose of avoiding any controversy or question respecting them. The entire engagement of the parties, with all the conditions upon which its fulfilment could be claimed, must be conclusively presumed to be there stated. If, by inadvertence or mistake, provisions other than those intended were inserted, or stipulated provisions were omitted, the parties could have had recourse for a correction of the agreement to a court of equity, which is competent to give all needful relief in such cases. But, until thus corrected, the policy must be taken as expressing the final understanding of the assured and of the insurance company.

The previous representation of the agent could in no respect operate as an estoppel against the company. Apart from the circumstance that the policy subsequently issued alone expressed its contract, an estoppel from the representations of a party can seldom arise, except where the representation relates to a matter of fact, — to a present or past state of things. If the representation relate to something to be afterwards brought into existence, it will amount only to a declaration of intention or of opinion, liable to modification or abandonment upon a change of circumstances of which neither party can have any certain knowledge. The only case in which a representation as to the future can be held to operate as an estoppel is where it relates to an intended abandonment of an existing right, and is made to influence others, and by which they have been induced to act. An estoppel cannot arise from a promise as to future action with respect to a right to be acquired upon an agreement not yet made.

The doctrine of estoppel is applied with respect to representations of a party, to prevent their operating as a fraud upon one

who has been led to rely upon them. They would have that effect, if a party who, by his statements as to matters of fact, or as to his intended abandonment of existing rights, had designedly induced another to change his conduct or alter his condition in reliance upon them, could be permitted to deny the truth of his statements, or enforce his rights against his declared intention of abandonment. But the doctrine has no place for application when the statement relates to rights depending upon contracts yet to be made, to which the person complaining is to be a party. He has it in his power in such cases to guard in advance against any consequences of a subsequent change of intention and conduct by the person with whom he is dealing. For compliance with arrangements respecting future transactions, parties must provide by stipulations in their agreements when reduced to writing. The doctrine carried to the extent for which the assured contends in this case would subvert the salutary rule, that the written contract must prevail over previous verbal arrangements, and open the door to all the evils which that rule was intended to prevent. *White* v. *Ashton*, 51 N. Y. 280; Bigelow, Estoppel, 437–441; *White* v. *Walker*, 31 Ill. 422; *Faxton* v. *Faxon*, 28 Mich. 159.

The learned judge who tried this case in the Circuit Court instructed the jury, in substance, that if they could find from the language of the agent that there was an agreement between him and the assured, made before the policy was executed, that the latter should have notice before he should be required to pay the annual premium, then that the company, not having given such notice, was estopped from setting up the forfeiture stipulated by the policy for non-payment of the premium when due. For the reasons we have stated, we think the court erred in this instruction.

There is nothing in the record which shows that the agent was invested with authority to make an insurance for the company. In representing himself as an agent, he only solicited an application by the assured to the company for a policy. That instrument was to be drawn and issued by the company, and it shows on its face that the authority to the agent was limited to countersigning it before delivery and to receiving the premiums.

But even if the agent had possessed authority to make an insurance for the company, and he made the agreement pretended, still the assured was bound by the terms of the policy subsequently executed and accepted by him.

The judgment must be reversed, and the cause remanded for a new trial; and it is

So ordered.

SCHUMACHER v. CORNELL.

1. Letters-patent No. 133,536, granted Dec. 3, 1872, to William Johnson, for an improvement in wrenches, do not infringe reissued letters-patent No. 5026, granted Aug. 6, 1872, to John Lacey and George B. Cornell, for an improvement in wrenches for extracting bung-bushes.
2. The doctrine of mechanical equivalents has no application to this case.

APPEAL from the Circuit Court of the United States for the Eastern District of Wisconsin.

This is a suit by George B. Cornell, against Eilert Schumacher and William Johnson, for an injunction, and for damages claimed for the alleged infringement by them of reissued letters-patent No. 5026, granted Aug. 6, 1872, to John Lacey and George B. Cornell, for an improvement in wrenches for extracting bung-bushes; said letters being a reissue of original letters No. 118,617, dated Aug. 29, 1871.

The defendants justified under letters-patent No. 133,536, issued to Johnson Dec. 3, 1872, for an improvement in wrenches.

The specification and claim of both patents are fully stated in the opinion of the court.

The drawings therein referred to are as follows:—

J. LACEY & G. B. CORNELL.

Improvement in Wrenches for extracting Bung-bushes.

No. 5026. — Reissued Aug. 6, 1872.

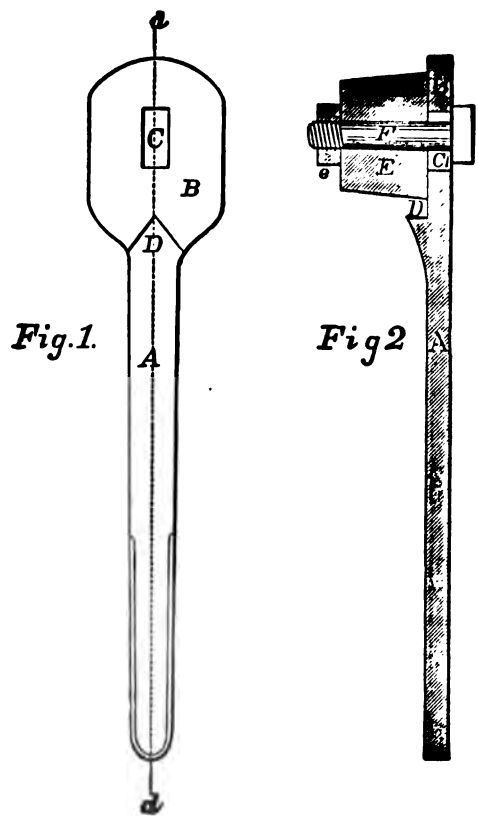

W. JOHNSON.

Wrench.

No. 133,536.—Patented Dec. 3, 1872.

Fig. 1.

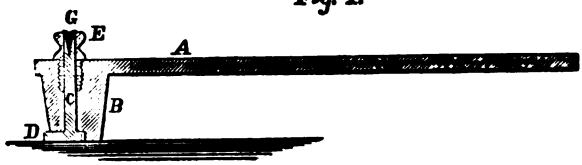

Fig. 2.

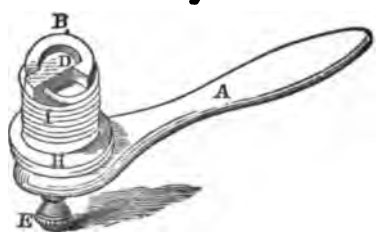

The court below decreed in favor of the complainant, and awarded him an injunction, whereupon the defendants appealed to this court.

Mr. William P. Lynde for the appellants.

There was no infringement. Curtis, Patents, sect. 249; *Prouty* v. *Ruggles*, 1 Story, 568; s. c. 16 Pet. 336; *Winans* v. *Schenectady & Troy Railroad Co.*, 2 Blatchf. 279; *Bell* v. *Daniels*, 1 Fish. Pat. Cas. 372; *Fuller* v. *Yentzer*, 94 U. S. 288; *Gill* v. *Wells*, 22 Wall. 1; *Gould* v. *Rees*, 15 id. 187; *Vance* v. *Campbell*, 1 Black, 427.

There is no room in this case to invoke the doctrine of mechanical equivalents. *Seymour* v. *Osborne*, 11 Wall. 516; *Gould* v. *Rees*, *supra*; *Gill* v. *Wells*, *supra*.

Mr. L. L. Bond, *contra*, cited Curtis, Patents, sect. 332, 453–458; *Blanchard* v. *Biers*, 2 Blatchf. 418; *Sewall* v. *Jones*, 91 U. S. 171; *Root* v. *Ball*, 4 McLean, 177; *Alden* v. *Dewey*, 1 Story, 336; *Haworth* v. *Hardcastle*, Web. Pat. Cas. 484 *Ransom* v. *Mayor*, *&c.*, 1 Fish. Pat. Cas. 252; *Whipple* v. *Middlesex Co.*, 4 id. 41; *Winans* v. *Denmead*, 15 How. 330.

MR. JUSTICE SWAYNE delivered the opinion of the court.

This is a suit in equity founded upon reissued patent No. 5026. The reissue is for "an improved wrench for securing metallic bushing in casks and barrels," and bears date on the 6th of August, 1872. The appellee is the complainant.

The bill alleges infringement, and prays for an injunction and damages.

The answer denies the infringement, and sets up several other defences.

This opinion will be confined to the question of infringement.

The description of the appellee's wrench and his claim are thus set forth in the reissue: —

"The present invention relates to a wrench employed in securing a metallic bung-bushing within the aperture of casks, barrels, &c.; and the improvement consists in providing the shank of the wrench with a cylindrical core so arranged as to closely fit the aperture in the bushing, and a V-shaped projection adapted to fit a corresponding notch formed in the bushing, whereby the same may be turned into place without assuming an oblique position within the bung-opening, and also preventing the wrench from slipping from its seat; all of which will be more fully understood by the following description: —

"In the drawing, A represents the shank of the wrench, which consists of a plain metal bar of the requisite length. Attached to one end of this bar is a flat metal plate, B, which is provided at its centre with an elongated mortise, C, as shown in Fig. 1. This shank is so formed at its junction with the plate as to provide a V-shaped projection, D, the point of which extends forward toward the centre of the plate. E represents a cylindrical cast-metal core, which is made tapering, and so arranged as to fit the aperture in the bushing. This core is made separate from the plate, and is attached thereto by means of a bolt, F, which passes through the mortise formed in the plate, as shown in Fig. 2. The arrangement of this core is such as to admit of being removed from the bolt by removing the nut *e*, the object of which is to allow a core of greater diameter to be substituted when used in bushings of large size, provision being made for the elongation of the mortise in the plate for the moving of the bolt toward or from the projection D, which becomes necessary when cores of different sizes are used.

"In using the said invention, the core is inserted into the open-

ing through the bushing, and turned until projection D falls into a notch formed in the bushing, which is adapted to fit the same; and by means of the core the bushing is kept steady, and prevented from assuming an oblique position in the bung-opening while being turned into place, and by the contact of the projection within the notch the wrench is prevented from slipping from its seat, thereby enabling the bushing to be readily turned into place.

"We do not wish to confine ourselves exclusively to the V-shaped projection, as any form that will prevent the core from turning independent of the bushing will produce the same result.

"Having thus described the said invention, we claim —

"The wrench herein described, consisting of a shank, A, plate, B, projection, D, and core, E, the said core adapted to fit the opening through the bushing, whereby the same is prevented from assuming an oblique position when being turned into place, substantially as described."

The wrench of the appellants, out of which this controversy has grown, is also covered by a patent, but of later date than the appellee's. The specifications and claim of this patent are brief and clear. They are as follows: —

"DESCRIPTION OF THE DRAWING FORMING PART OF THE SPECIFICATION.

"Fig. 1 is a sectional view of the wrench; Fig. 2, a perspective view of the wrench and bushing.

"GENERAL DESCRIPTION.

"A is the handle of the wrench; B, the projection which fits into the inside of the bushing; C, a rod which runs down through the projection B in a hole nearer one side than the other; D, a piece on the end of the rod C which fits into a recess in the bottom of B; E, a knob on the top of rod C; F, spring on rod C, under knob E, which holds the rod C up in place; G, a screw in the top of rod C, which holds knob E on securely in place; H, the bush; I, the projection on the bottom of the bushing which the part of the wrench D strikes against to screw the bushing into place.

"The operation of this wrench is as follows: The part B is placed in the bush, and the operator then takes hold of the knob E and turns it, and, as it turns, the part D at the bottom is turned out and catches against the projection I in the bushing, and then the handle A and the bush will turn with it and be screwed home.

"NATURE AND OBJECT OF THE INVENTION.

"My invention is a wrench to screw bung-bushings into beer-barrels, and fits into the opening and strikes against a projection on the bushing at the inner end of the bush, thus preserving the whole strength of the bushing. The notch on the outer side of the bushing, which weakens it, is avoided.

"CLAIM.

"The combination and arrangement of projection B, rod C, piece D, and knob E, substantially as and for the purpose set forth."

Models of both instruments have come up with the record, and are in evidence. They are made in conformity to the respective specifications of the parties. The mind is much more effectually assisted in these cases by such aids than is possible by any drawings and description, however full, without them. We are thus enabled in this case readily to come to satisfactory conclusions.

Wrenches are very old. They have long been used for various purposes in the mechanic arts. Numerous cuts representing them in different forms are found in Knight's Mechanical Dictionary, pp. 1473, 1711, 2821.

The patent is well entitled for an improvement. It could be for nothing more.

Nothing is claimed separately. Every thing is claimed together and in the aggregate. If any thing was withdrawn, and no equivalent supplied in its place, the instrument would be a failure. Each element is a part of a compound unit, and is necessary to the completeness and efficacy of the result.

A combination is always an entirety. In such cases, the patentee cannot abandon a part and claim the rest, nor can he be permitted to prove that a part is useless, and, therefore, immaterial. He must stand by his claim as he has made it. If more or less than the whole of his ingredients are used by another, such party is not liable as an infringer, because he has not used the invention or discovery patented. With the change of the elements the identity of the product disappears. *Vance* v. *Campbell*, 1 Black, 427.

But whether the patent here is for a combination or not is,

in our view, not material. If the negative be conceded, we think the differences in the two instruments are so radical that the end of this litigation must be the same.

Upon examining the models and specifications of the parties, it is found that the appellants have nothing in common with the appellees in several important particulars. They have not the flat plate B, nor the mortise C, nor the V-shaped projection D, nor the bolt F, as shown in Fig. 2, nor any arrangement touching the core whereby it can be removed, and one of larger diameter be substituted, when the size of the cavity of the bush requires such a change; and there is no notch in the flange of the bush such as that to which the appellee's wrench is applied, and hence no projection to fit into such an indentation. Without both these things the appellee's wrench would be entirely useless. They are, therefore, vital in the invention covered by his patent. The notch is the point of engagement between the bushing and the wrench when the latter, operating as a lever, gives the former its circular motion, and thus forces it home. Without this arrangement such motion could not be communicated and the desired result produced. Hence its importance in the scheme of the invention. Without it, the rest would be as worthless for the end in view as one blade of a pair of scissors disjoined from the other.

The appellants thought this notch arrangement seriously objectionable. They claimed that it weakened the flange of the bush, and that the application of the leverage necessary to give the bush the requisite circular motion until the work is done not unfrequently involved its destruction. They sought to obviate the difficulty by an invention of their own.

The first thing to be done was to change the bush so as to give it the desired strength. This could be effected only by dispensing with the notch. That was done.

Then it was indispensable that something should be substituted whereby the necessary turning motion could be given by the wrench to the bushing without injuring or destroying the latter. For this purpose a projection was put on the inside of the bush, low down. This strengthened rather than weakened it.

Bushes, like wrenches, are very old. They are not here in

question. If they were, certainly the appellants had the same right to make them with the inner projection that the appellee had to make them with the outer notch.

But, although the appellants' bush was unexceptionable, there was no wrench known in mechanics whereby it could be made to operate. The appellee's wrench was inapplicable. Projection D in his wrench, as regards such purpose, might as well have been anywhere else. It could have no possible relation of cause and effect to the thing to be done. The appellants entered the new and unoccupied field before them and succeeded. Their wrench has a projection or core attachment, which is inserted into the bush. Through this core runs a rod with a latch at the lower end, which fits into a recess at the bottom of the core. The core is introduced into the bush; the latch is turned by means of a knob at its top, so as to catch against the projection in the bush. The force of the wrench then being applied, the bush is readily screwed to its place. This was the last stage in the process of the invention.

The doctrine of mechanical equivalents has no application here, and need not be considered. The two instruments are separated by a broad line of demarcation. There is nothing in the appellee's which is suggestive of any thing in the appellants'. No one from studying the former would have been thereby led to the results embodied in the latter. They are at opposite poles. Unless the appellee is entitled to claim every form of wrench applicable to bushes, invented after his own, his bill cannot be maintained.

The appellants seem to have considered his machine as a thing to be shunned, rather than to be followed. There is, certainly, not less of novelty, utility, and invention in their wrench than in his. Whether his patent is or is not for a combination, the facts are alike fatal to this suit. There has been no infringement by the appellants.

The decree of the Circuit Court will be reversed, and the case remanded with directions to dismiss the bill; and it is

So ordered.

GARFIELD v. PARIS.

1. Matters of evidence are not required to be stated in a bill of particulars.
2. A purchaser's receipt and acceptance of goods sufficient to satisfy the Statute of Frauds may be constructive.
3. A. contracted by parol, in New York, for the purchase of a large quantity of spirituous liquor of B., who, by the agreement, was to furnish certain labels. B. delivered them, pursuant to instruction, to A. in New York, and shipped the liquor to A. in Michigan, where he resided. A., when sued for the price of the liquor, no part of which had been paid, insisted that the contract was not completed until the delivery of the liquor in Michigan, and he relied upon the prohibitory liquor law of that State, which declares that all such contracts are null and void. The jury found that the labels added to the value of the liquor, and formed part of the price, and that A. accepted them in New York as a part of the goods sold. *Held*, that the finding of the jury upon the question of acceptance being final and conclusive, the contract was executed in New York, and was by the laws thereof valid.

ERROR to the Circuit Court of the United States for the Eastern District of Michigan.

This was an action by Paris, Allen, & Co., of New York, against Garfield & Wheeler, of Detroit, Mich., to recover for certain spirituous liquors sold to the defendants by the plaintiffs, in the city of New York.

The facts are stated in the opinion of the court.

Verdict and judgment for the plaintiffs; whereupon the defendants sued out this writ of error.

Mr. Henry M. Duffield for the plaintiffs in error.

The admission of the evidence concerning the labels, which were not mentioned in the bill of particulars, was erroneous.

"The office of a bill of particulars is to inform the opposite party of the causes of action to be relied upon on the trial, which are not specifically set out in the declaration." Bosworth, J., in *Bowman* v. *Earle*, 3 Duer (N. Y.), 694; *Davis* v. *Freeman*, 10 Mich. 188. The plaintiff will be confined to the items it contains. 2 Archb. Pr. 222; 1 Tidd, Pr. 599; *Williams* v. *Sinclair*, 3 McLean, 289. When furnished, it is deemed part of the declaration. *Starkweather* v. *Kittle*, 17 Wend. (N. Y.), 20. The plaintiff must be confined to the particulars he has specified, as closely and effectually as if they constituted essential allegations in a special declaration. *Commonwealth* v. *Giles*, 1 Gray (Mass.), 469; *Commonwealth* v. *Snelling*, 15 Pick.

(Mass.) 321. Plaintiff will not be allowed to establish his claim in a manner different from that in which he has elected by his bill of particulars to consider the defendant his debtor. *De Sobry* v. *De Laistre*, 2 Har. & J. (Md.) 191.

If the sale of the liquor was a Michigan contract, it was void under the prohibitory liquor law of that State, and the plaintiffs cannot recover. *Myers* v. *Carr*, 12 Mich. 63; *Roethke* v. *Philip Best Brewing Co.*, 33 id. 341; *In re Paddock*, 6 Nat. Bank. Reg. 132.

The sale was not made in the State of New York, unless there consummated. The delivery of the labels to one of the plaintiffs in error was not a receipt and acceptance of part of the goods sold. These labels were not invoiced; no price was put upon them; no given amount or number of them was agreed to be furnished; nothing was added to the price of the whiskey on account of them. They are not proven to be of any value. The receipt and acceptance by the buyer must be such as completely affirms the contract. Heath, J., in *Kent* v. *Huskinson*, 3 Bos. & Pul. 223.

It must appear that the vendor has parted with the possession of the goods, and placed them under the control of the purchaser, so as to put a complete end to all the rights of the unpaid vendor, as such. *Gray* v. *Davis*, 10 N. Y. 285; *Messer* v. *Woodman*, 22 N. H. 172; Addison, Contr. 113, note 3. It is not enough that the buyer should have taken a part of the goods in his possession, Browne, Stat. Frauds, sect. 326; nor have taken out a sample, *German* v. *Boddy*, 2 Car. & Kir. 145; nor even examined the whole lot delivered, for the purpose of ascertaining the quantity or quality, *Baylis* v. *Lindy*, 4 L. T. N. S. 176; even though the lot be injured thereby, *Curtis* v. *Pugh*, 10 Ad. & E. 111; *Elliott* v. *Thomas*, 3 Mee. & W. 170.

A case somewhat resembling this is decided against the validity of the contract, in *Delventhal* v. *Jones*, 53 Mo. 460. And the later decisions have firmly laid down the important and true principle that there can be no acceptance and receipt affirming and binding the contract, so long as the buyer has the privilege of returning the goods as objectionable in quantity or quality. *Hanson* v. *Armitage*, 5 Barn. & Ald. 557; *Howe* v. *Palmer*, 3 id. 321; *Acebal* v. *Levy*, 10 Bing. 376; *Nicholle* v.

Plume, 1 Car. & P. 272; *Norman* v. *Phillips*, 14 Mee. & W. 277; *Smith* v. *Surnam*, 9 Barn. & Cress. 561; *Coats* v. *Chaplin*, 3 Add. & E. N. S. 483; *Jordan* v. *Norton*, 4 Mee. & W. 155. And see, to the same effect, *Shindler* v. *Houston*, 1 Comst. (N. Y.) 261; *Outwater* v. *Dodge*, 6 Wend. (N. Y.) 400; *Lloyd* v. *Wright*, 25 Ga. 215; *Spencer* v. *Hale*, 30 Vt. 314; *Maxwell* v. *Brown*, 39 Me. 98; *Shepherd* v. *Pressy*, 32 N. H. 49; *Coombs* v. *Bristol & Exeter Railway Co.*, 3 H. & N. 510; *Rogers* v *Phillips*, 40 N. Y. 519.

Can it be seriously urged, that, by merely allowing the labels to be sent to the hotel of one of the plaintiffs in error, in New York, they thereby precluded themselves from objecting that the liquor afterwards furnished was not what they purchased? Could the plaintiffs have compelled defendants to take any liquors they might choose to ship, because Wheeler, while in New York, had accepted a few labels? Or, on the other hand, can it be claimed that the defendants in error, by delivering the labels, had lost their right of stoppage *in transitu*, in case the other party became insolvent?

The court declined to hear counsel for the defendants in error.

MR. JUSTICE CLIFFORD delivered the opinion of the court.

Neither the manufacture nor the sale of spirituous or intoxicating liquors is allowed by the law of the State where the present controversy arose. Instead of that, the State law provides that all payments made for such liquors so sold may be recovered back, and that all contracts and agreements in relation to such sales shall be utterly null and void against all persons and in all cases; with an exception in favor of the *bona fide* holders of negotiable securities and the purchasers of property without notice. 1 Comp. Laws, Mich., p. 690.

Two bills of goods, consisting of spirituous liquors, were purchased of the plaintiffs by the defendants, which, including exchange, amounted to $4,143.69. Payment being refused, the plaintiffs brought suit in the court below to recover the amount, and the verdict and judgment were for the plaintiffs. Exceptions were taken by the defendants, and they sued out the present writ of error.

Sufficient appears to show that the plaintiffs are citizens of New York, and that the defendants are citizens of Michigan; that the liquors were purchased of the plaintiffs, as alleged; and that the same were received and sold by the defendants: but they set up the prohibitory liquor law of the latter State, providing that all such contracts are utterly null and void.

Evidence was introduced by the plaintiffs, showing that the liquors were ordered by one of the defendants at a time when he was temporarily in the city of New York; and that the plaintiffs, by his request, sent certain labels to be attached to the same, to the defendant, at the hotel in that city where he was stopping. By the agreement at the time the sale was made, the plaintiffs were to furnish these labels to the purchasers; and the evidence showed that the value of the labels entered into the price charged for the liquors, and that the labels, by the terms of the contract, were to be furnished to the buyers, by the sellers, without any other charge than the price to be paid for the liquors. Labels of the kind were something more than ordinary labels affixed to bottles, as they indicated not only the kind of liquor which the bottle contained, but also embraced an affidavit that the distillation was genuine, and of the particular brand manufactured and distilled by the plaintiffs; support to which is derived from the fact that the label was copyrighted, so that no other person than the plaintiffs had any right to make, use, or vend it.

Certain questions were submitted to the jury, among which were the following: Were there any receipt and acceptance in New York of part of the goods sold; and, if so, what was so received? To which the jury answered, There was, to wit, certain labels. Was any thing added to the price of the liquors on account of the labels, and, if so, what amount or price? Answer: There was nothing added; but the labels added to the value of the liquors, and formed part or parcel of the price.

Testimony was offered by the plaintiffs in respect to the delivery of the labels to the defendant while he was at the hotel in New York, to which the defendants objected; but the court overruled the objection, and the testimony was admitted, subject to the defendant's objection.

Errors assigned are in substance and effect as follows: 1. That the court erred in refusing to charge the jury that the delivery of the labels, as proved, was not a receipt and acceptance of part of the goods sold within the meaning of the State Statute of Frauds. 2. That the court erred in refusing to charge the jury that the evidence was not sufficient to take the case out of the Statute of Frauds. 3. That the court erred in refusing to charge the jury that the sale was not consummated until the defendants received and accepted the goods in the State where they resided. 4. That the court erred in instructing the jury that the defence set up is one not to be favored, and that the proof to support it must be clear and satisfactory, before the jury can consistently enforce it. 5. That the statute is a penal statute, in derogation of the rights of property; and that for that reason, if for no other, it must receive a strict construction. 6. That the court erred in instructing the jury that if the labels were included in the contract, and the liquors were worth more to the defendants on account of the labels, then the receipt and acceptance of the same by the acting defendant took the case out of the New York Statute of Frauds, and their verdict should be for the plaintiffs.

Due exception was also made to the ruling of the court in admitting the evidence reported in respect to the delivery and acceptance of the labels furnished to the purchasers at the time the order for the liquors was filled, the objection being that the labels are not mentioned in the plaintiff's bill of particulars filed in the case.

Matters of evidence are never required to be stated in such a paper. Courts usually require such a notice where the declaration is general, in order that the defendant may know what the cause of action is to which he is required to respond. Nothing is wanted in this case to meet that requirement, as all the items of the demand are distinctly and specifically stated in the bill filed in compliance with the order of the court.

Merchants selling spirituous liquors in bottles usually label the bottles, to indicate the kind, character, age, quality, or proof of the liquor, or to specify the name of the manufacturer, or the place where it was manufactured or distilled. Such are somewhat in the nature of trade-marks, and are useful to the seller

of the liquors, to enable him to distinguish one kind of liquor from another without opening the bottle, and to commend the article to his customers without oral explanation.

Coming to the errors formally assigned, it is manifest that the first and second may be considered together, as they depend entirely upon the same considerations.

Both parties concede that the bargain for the sale of the liquors in this case was made in New York; and, by the laws of that State, contracts for the sale of any goods, chattels, or things in action, for the price of $50 or more, shall be void, unless, 1, a note or memorandum of such contract be made in writing, and be subscribed by the parties to be charged thereby; or, 2, unless the buyer shall accept and receive part of such goods, or the evidences, or some of them, of such things in action; or, 3, unless the buyer shall at the time pay some part of the purchase-money. 3 Rev. Stats. New York (6th ed.), 142, sect. 3.

Four answers are made by the plaintiffs to that proposition, each of which will receive a brief consideration: —

1. That the defendants received and accepted the labels which the plaintiffs contracted to furnish at the time they filled the order for the liquors. 2. That the case is not within the Statute of Frauds, inasmuch as the defendants received the liquors, and sold the same for their own benefit. 3. That the statute of Michigan, prohibiting the sale of such liquors, and declaring such contracts null and void, has been repealed. 4. That the subsequent letter written by the defendants to the plaintiffs takes the case out of the operation of the statute requiring such a contract to be in writing.

Authorities almost numberless hold that there is a broad distinction between the principles applicable to the formation of the contract and those applicable to its performance, which appears with sufficient clearness from the language of the statute, — such a contract must be in writing, or there must be some note or memorandum of the same to be subscribed by the party to be charged: but the same statute concedes that the party becomes liable for the whole amount of the goods, if he accepts and receives part of the same, or the evidences, or some of them, of such things in action; and the authorities agree,

that, where the question is whether the contract has been fulfilled, it is sufficient to show an acceptance and actual receipt of a part, however small, of the thing sold, in order that the contract may be held to be good, even though it does not preclude the purchaser from refusing to accept the residue of the goods, if it clearly appears that they do not conform to the contract. Benjamin on Sales (2d ed.), 117; *Hinde* v. *Whitehouse*, 7 East, 558; *Morton* v. *Tibbett*, 15 Ad. & E. N. S. 427.

Hence, said Lord Campbell, in the case last cited, the payment of any sum in earnest to bind the bargain, or in part payment, is sufficient; the rule being, that such an act on the part of the buyer, if acceded to on the part of the vendee, is an answer to the defence.

"Accept and receive" are the words of the statute in question; but the law is well settled, that an acceptance sufficient to satisfy the statute may be constructive, the rule being that the question is for the jury whether the circumstances proved, of acting or forbearing to act, do or do not amount to an acceptance within the statute. *Bushel* v. *Wheeler*, 15 Ad. & E. N. S. 445; Chitty, Contr. (10th ed.) 367; *Parker* v. *Wallis*, 5 El. & Bl. 21; *Lillywhite* v. *Devereux*, 15 Mee. & W. 285; *Simmonds* v. *Humble*, 13 C. B. N. S. 261; Addison, Contr. (6th ed.) 169.

Questions of the kind are undoubtedly for the jury; and it is well settled that any acts of the parties indicative of ownership by the vendee may be given in evidence to show the receipt and acceptance of the goods to take the case out of the Statute of Frauds. Conduct, acts, and declarations of the purchaser may be given in evidence for that purpose; and it was held, in the case of *Currie* v. *Anderson* (2 El. & El. 591), that the vendee of goods may so deal with a bill of lading as to afford evidence of the receipt and acceptance of the goods therein described. *Gray* v. *Davis*, 10 N. Y. 285.

Throughout, it should be borne in mind that one of the defendants in person visited the plaintiff's place of business, and while there ordered the liquors, and that the liquors were all received by the defendants at their place of business, and were sold by them for their own benefit; that the contract between the sellers and purchasers was that the former should furnish

the labels as part of the contract; and the evidence shows that they fulfilled that part of the contract, and that they delivered the same to the contracting party at his hotel, before he left the State where the purchase was made.

Satisfactory evidence was also introduced by the plaintiffs, showing that they drew a draft on the defendants for the payment of the price, and that the defendants answered the letter of the plaintiffs declining to accept the same, as more fully set forth in the record, in which they state that the purchase was on four months, with the further privilege of extending the time two months longer by allowing seven per cent interest, adding, that if the plaintiffs doubted their word, they had "a written contract to that effect." What they claim in the letter is that the arrangement was made with the salesman; and they state that they would not have given him the order, if he had not given them "those conditions." They make no complaint that the liquors were not of the agreed quantity and quality, and certainly leave it to be implied that they had been duly received, and that they were satisfactory.

It was contended by the plaintiffs that the case was taken out of the Statute of Frauds: 1. Because the labels were a part of what was purchased, and that the defendants accepted and received the same at the time and place of the purchase. 2. That the subsequent letter, as exhibited in the record, is sufficient for that purpose.

Enough appeared at the trial to show that the labels were copyrighted, and that the plaintiffs agreed to furnish the same without any additional charge; and the bill of exceptions also shows that it was conceded that the defendants accepted and received the labels at the hotel, as claimed by the plaintiffs. Still, the defendants denied that the labels were of any value, or that they entered into or constituted any part of the things purchased; both of which questions the circuit judge submitted to the jury, remarking, at the same time, that by the furnishing the labels with the liquors the defendants acquired the right to use the copyright to that extent, without which, or some equivalent permission or license, they would have had no such lawful authority.

Pursuant to these suggestions, the jury were directed to as-

certain whether the liquors were worth more to the defendants on account of the labels, and whether the labels were included in the contract; and they were instructed, that, if they found affirmatively in respect to both of these inquiries, then the receipt and acceptance of the labels as alleged took the case out of the Statute of Frauds, because then there was a receipt and acceptance by the defendants of a portion of the things purchased.

Appropriate instruction was also given to the jury in respect to the subsequent letter sent by the defendants to the plaintiffs; and the jury were told by the presiding judge, that if they found, under the instructions given, that the defendants received and accepted a part of the things purchased, then the contract was made valid as a New York contract, and that their verdict should be in favor of the plaintiffs. *Currie* v. *Anderson*, *supra*. That if the contract was not made valid by the acceptance and receipt of the labels, nor by the letter exhibited in the record, then it was a Michigan contract, and their verdict should be for the defendants. *Meredith* v. *Meigh*, 2 El. & Bl. 364; *Castle* v. *Sworder*, 6 H. & N. 828; Law Rep. 1 C. P. 5.

Controlling authorities already referred to show that the question whether the goods or any part of the same were received and accepted by the purchaser is one for the jury, to which list of citations many more may be given of equal weight and directness. Just exception cannot be taken to the form in which the question was submitted to the jury; and the record shows that the verdict was for the plaintiffs, and that the jury found, in response to the fifth question, that the labels added to the value of the liquors, and that they formed part or parcel of the price. *Jackson* v. *Lowe*, 7 Moore, 219.

Where goods are purchased in several parcels, to be paid for at a future day, the whole, within the meaning of the Statute of Frauds, constitutes but one contract, and the delivery of part to the purchaser is sufficient to take the case out of the operation of the Statute of Frauds. *Mills* v. *Hunt*, 20 Wend. (N. Y.) 431.

Apply the finding of the jury in this case to the conceded facts, and it shows that the defendants were in the situation of

a purchaser who goes to a store and buys different articles, at separate prices for each article, under an agreement for a credit, as in this case, accepting a part, but leaving the bulk to be forwarded by public conveyance. Frequent cases of the kind occur; and it is well settled law that the delivery of a part of the articles so purchased, without any objection at the time as to the delivery, is sufficient to take the case out of the Statute of Frauds as to the whole amount of the goods. *Mills* v. *Hunt*, 20 id. 431.

The delivery in such a case, in order that it may have that effect, must be made in pursuance of the contract, the question whether it was so made or not being one for the jury; but if they find that question in the affirmative, then it follows that the case is taken out of the Statute of Frauds. *Van Woert* v. *Albany & Susquehanna Railroad Co.*, 67 N. Y. 539.

Parol evidence is admissible to show what the circumstances were attending the contract, and to show the receipt and acceptance, in whole or in part, of the goods purchased. *Tomkinson* v. *Staight*, 17 C. B. 695; *Kershaw* v. *Ogden*, 3 H. & C. 715.

Due acceptance and receipt of a substantial part of the goods will be as operative as an acceptance and receipt of the whole; and the acceptance may either precede the reception of the article, or may accompany their reception. 2 Whart. Evid., sect. 875.

Differences of opinion have existed upon some of these matters; but all the authorities, or nearly all, concur that the question is for the jury, to be determined by the circumstances of the particular case. Id.

Viewed in the light of these suggestions, it is clear that the question whether the evidence showed that the case was taken out of the Statute of Frauds by the acceptance and receipt by the defendants of a part of what was purchased by them, in connection with the letter of the defendants exhibited in the record, was fairly submitted to the jury, and that their finding in the premises is final and conclusive.

Attempt was also made by the plaintiffs to support the judgment, upon the ground that the defendants were estopped to set up the Statute of Frauds as a defence, in view of the fact that they had received the liquors and sold the same for their

own benefit; but it is not necessary to examine that proposition in view of the conclusion that the case is taken out of the operation of the statute by the other evidence and the finding of the jury. Nor is it necessary to give any consideration to the proposition that the act of the State of Michigan to prevent the manufacture and sale of spirituous and intoxicating liquors as a beverage is repealed, for the same reason, and also for the additional reason, that the repealing clause saves "all actions pending, and all causes of action which had accrued at the time" the repealing act took effect. Sess. Acts, 1875, p. 279.

Having come to the conclusion that the case is taken out of the Statute of Frauds, it is not deemed necessary to give the other assignments of error a separate examination. Suffice it to say, that the court is of the opinion that there is no error in the record.

Judgment affirmed.

UNITED STATES v. KAUFMAN.

A brewer paid to the collector of internal revenue $100 for special tax on his business from May 1, 1873, to April 30, 1874, for which a special tax stamp was given him. At the close of the year, it was found that he had manufactured less than five hundred barrels, and the Commissioner of Internal Revenue allowed his claim for the excess paid by him. Upon proper application to the treasury, payment of the amount so allowed was refused. *Held*, 1. That the allowance made by the commissioner, unless it be impeached in some appropriate form by the United States, is conclusive. 2. That the Court of Claims has jurisdiction of a suit by the brewer against the United States to recover the amount, and that he is entitled to judgment therefor.

APPEAL from the Court of Claims.

This was an action against the United States to recover the amount which the commissioner of internal revenue had certified to the comptroller of the treasury that the claimant was entitled to have refunded to him the value of returned special tax stamps, after deducting therefrom five per cent, as provided by law.

The facts are stated in the opinion of the court.

There was a judgment against the United States, who thereupon appealed.

The Solicitor-General for the United States.
Mr. P. E. Dye, contra.

MR. CHIEF JUSTICE WAITE delivered the opinion of the court.

Two questions are presented in this case: —

1. Whether the Court of Claims has jurisdiction of a suit, brought to recover an amount allowed by the Commissioner of Internal Revenue, upon the claim of a brewer for an excess of special tax stamps used by him in payment of the special tax upon his business at the beginning of the year, when, at the close, it was found that he had manufactured less than five hundred barrels, and the payment of the amount so allowed has been refused upon proper application at the treasury.

2. Whether the facts found are sufficient to warrant the judgment.

The Court of Claims has jurisdiction of "all claims founded upon any law of Congress, or upon any regulation of an executive department, or upon any contract, express or implied, with the government of the United States." Rev. Stat., sect. 1059.

All special taxes imposed by law, accruing after April 30, 1873, must be paid by stamps denoting the tax. Rev. Stat., sect. 3238; 17 Stat. 402, sect. 3. A brewer is required to pay a special tax of $100, "provided that any person who manufactures less than five hundred barrels a year shall pay the sum of $50" (Rev. Stat., sect. 3244; 14 Stat. 117); and he cannot engage in or carry on his business until he has paid the tax. Rev. Stat., sect. 3232; 14 Stat. 113. "The Commissioner of Internal Revenue may, from time to time, make regulations, upon proper evidence of facts, for the allowance of such of the stamps issued under the provisions of this chapter, or any internal revenue act, as may have been spoiled, destroyed, or rendered useless or unfit for the purposes intended, or for which the owner may have no use, or which, through mistake, may have been improperly or unnecessarily used, or where the rates of duties represented thereby have been paid in error or remitted; and such allowance shall be made either by giving other stamps in lieu of the stamps so allowed for, or by repay-

ing the amount or value, after deducting therefrom, in case of repayment, the sum of five per cent, to the owner thereof; . . ." Rev. Stat., sect. 3426; 13 Stat. 294, sect. 161; 17 id. 257, sect. 41. Under the authority of this act regulations were adopted, with the approval of the Secretary of the Treasury, June 12, 1873, among which is the following: "Claims for allowance on account of special tax stamps will not be considered in cases where any business has been done thereunder, except in the case of a brewer who has paid a special tax stamp of $100, but who, at the close of the special tax year, is found to have produced less than five hundred barrels. In such case, the excess paid by him, less five per cent, will be allowed." Int. Rev. Circular, No. 109.

It would seem to be clear from this statement that the allowance of a claim by the Commissioner of Internal Revenue, under the authority of these statutes and treasury regulations, raised an implied promise on the part of the United States to pay any amount that might actually be due the claimant under such circumstances, and certainly such a claim would be "founded upon a law of Congress."

We know it was held in *Nichols* v. *United States* (7 Wall. 122), that the Court of Claims did not have jurisdiction of a suit to recover back duties upon imported goods illegally assessed, and that the same rule applied to internal revenue cases where the decision of the commissioner upon appeal was adverse to the claimant. In such cases, a special remedy is given by suit against the collector, if the necessary steps are taken to secure the right to sue at all. The reason is, that as the liability is one created by statute, the special remedy provided by the same statute is exclusive.

But here the case is different. The claim has been presented to and allowed by the proper officer. The claimant has pursued the statutory remedy to the end. He is satisfied with the decision that has been given, and insists upon the payment which the government has undertaken to make. No special remedy has been provided for the enforcement of the payment, and consequently the general laws which govern the Court of Claims may be resorted to for relief, if any can be found applicable to such a case. This is upon the principle that "a lia-

bility created by statute without a remedy may be enforced by an appropriate common-law action." *Pollard* v. *Bailey*, 20 Wall. 527. And as against the government there are no common-law actions: any appropriate action within the scope of the jurisdiction of the Court of Claims may be resorted to, unless specially prohibited. Here the right has been given, and a liability founded upon a law of Congress created. Of such liabilities the Court of Claims has jurisdiction, and no other remedy has been provided.

Do the facts found warrant the judgment?

These facts are, in effect, that the claimant, who was a brewer, on the third day of May, 1873, paid to the internal revenue collector of his district $100, as the special tax on his business for one year, from May 1, 1873, to April 30, 1874, for which a special tax stamp was given him by the collector; that, May 6, 1874, he applied to the Commissioner of Internal Revenue to refund $50 of this amount, as he had only manufactured three hundred and fifty barrels during the year; that evidence in support of this application was submitted, and the commissioner on the 5th of July, 1874, certified to the Comptroller of the Treasury that the claimant had returned to him an internal revenue special tax stamp of the face value of $50, for which he was entitled to have refunded him $47.50; and that on the same day the commissioner notified the claimant of the allowance of his claim to that amount, for which a certificate had been lodged with the Comptroller of the Treasury.

It is now insisted that the finding of an allowance by the commissioner is not enough, and that the court should have gone behind the allowance, and found the facts in respect to the original claim. Such, we think, is not the law. To say the least, the allowance of a claim under this statute is equivalent to an account stated between private parties, which is good until impeached for fraud or mistake. It is not the allowance of an ordinary claim against the government, by an ordinary accounting officer, but the adjudication by the first tribunal to which the matter must by law be submitted. Until so submitted, and until so adjudicated, there is not even a *prima facie* liability of the government; but when submitted, and when

allowed upon the adjudication, the liability is complete until in some appropriate form it is impeached. When, therefore, the court found the adjudication against the government, without impeachment, the liability to pay was established. We do not decide that in the Court of Claims the adjudication of the commissioner may not be impeached, but we do decide that, until impeached, it is binding, and that the affirmative of the impeachment is upon the government.

It is said, however, that the finding does not show that the government has refused payment of the allowance. In *Clyde v. United States* (13 Wall. 38), we held that a rule of the Court of Claims was void which required "that, where the case was such as is ordinarily settled in an executive department, the petition should show that application for its allowance had been made to that department, and without success, and the decision thereon;" but that case was not one in which the action was based upon the decision of the department. Here it is. The foundation of the suit is the refusal of the government to pay a claim allowed by an officer authorized to repay moneys overpaid under certain circumstances, but who can only make payment through the proper disbursing agents of the treasury. The officer has done all he can do. He has made the allowance, and certified it to the Comptroller of the Treasury for payment. It does not appear in express terms that those charged with the duty of actually making the payment are in any respect at fault. For all that is shown in the finding, if the claimant had called upon the treasurer, he would have received his draft on the treasury, and, when that was properly presented, the money. The case is not materially different from what it would have been if he had procured his draft, and sued upon it without having first presented it for payment. Under such circumstances, clearly there could have been technically no refusal to pay until there had been a demand, or something which was an equivalent. Here, an application for payment was made to a proper officer of the department. He performed his duty by certifying his allowance, and sending it forward in the regular course of business through the department for payment. The adjustment was complete, and, for all that appears, nothing more was necessary for the claimant to do except to call at the treas-

ury and get his money. The presumption under such circumstances is that payment would have been made upon proper demand.

This record, however, does show that the claim was allowed July 3, 1874, while the suit was not commenced until June 25, 1875; and the trial below evidently proceeded upon the theory that no such objection to a recovery existed. In the opinion, it is said that the "comptroller did not pass the claim, and the allowance made by the commissioner has never been paid." So, too, in other cases where this is referred to, it is described as one in which "the comptroller refused to pass the account, and interposed objections which, if final, would thwart the action of the commissioner, and prevent the execution of the provisions of the regulations." *Boughton's Case*, 12 Ct. Cl. 336. And in the argument here, on behalf of the appellee, it is said "that the Assistant-Attorney-General admitted on the trial in the court below the fact of the refusal of the United States to pay the allowance made by the commissioner in favor of the claimant," and "that it was on the theory of the case that the defendants had refused to make payment of the allowance that the court entertained jurisdiction." Under these circumstances, we think it clear that this point was conceded below, and that it ought not to be considered here.

Judgment affirmed.

INSURANCE COMPANY v. EGGLESTON.

1. Any agreement, declaration, or course of action on the part of an insurance company, which leads a party insured honestly to believe that by conforming thereto a forfeiture of his policy will not be incurred, followed by due conformity on his part, will estop the company from insisting upon the forfeiture, though it might be claimed under the express letter of the contract.

2 A policy of insurance, issued by a New York company upon the life of A., who resided at Columbus, Miss., stipulated, that if the premiums were not paid at the appointed dates the company should not be liable, that all receipts for them were to be signed by the president and actuary, and that agents were not authorized to make, alter, or discharge contracts, or waive forfeitures. After the policy was issued, the company discontinued its agency at

Columbus, and from time to time, as the premiums became due, notified A. by mail where and to whom to pay them. No notice as to the premium due Nov. 11, 1871, having been received by him, it was ascertained, by inquiry of the agents at Savannah, Ga., and Vicksburg, Miss., to whom payment had formerly been made, that the sub-agent at Macon, Miss., held the receipt. Payment was tendered him Dec. 30, but he refused to accept it unless a certificate of A.'s health was furnished. A. died Jan. 5. 1872. The company, when sued, set up the forfeiture of the policy by reason of the non-payment of the premium on the day it was due. *Held*, that A., in view of the company's dealings with him, had reasonable cause to expect, and rely on receiving, notice where and to whom to pay the premium, and that the company was estopped from setting up that the policy was forfeited by the non-payment, on Nov. 11, of the premium then due.

8. *Insurance Company* v. *Davis* (95 U. S. 425), and *New York Life Insurance Company* v. *Statham et al.* (93 id. 24), commented on and distinguished from this case.

ERROR to the District Court of the United States for the Northern District of Mississippi.

This was an action in the District Court of the United States for the Northern District of Mississippi, having the same powers as a Circuit Court, on a policy of life insurance, issued by the plaintiff in error, the defendant below, a New York corporation doing business in the city of New York, on the 11th of November, 1868, for the sum of $5,000, on the life of Edward C. Eggleston, a resident of the State of Mississippi, for the benefit of his children, Louisa and Thomas, and in consideration of an annual premium of $306, payable after the first premium semi-annually, one-half on the 11th of November, and one-half on the 11th of May, in each year. The policy contained the usual condition that if the premiums were not paid on or before the respective days named, together with any interest that might be due thereon, the company should not be liable. The following clause was added: "All receipts for premiums are to be signed by the president or actuary. Agents for the company are not authorized to make, alter, or discharge contracts, or waive forfeitures." Eggleston died on the 5th of January, 1872.

The defence set up on the trial was that the policy was forfeited by the failure of the assured to pay the last instalment of premium, which fell due on the 11th of November, 1871. The cause was tried by a jury, who found for the plaintiffs; and the only question raised by the bill of exceptions and

brought here for review, is, whether the judge properly left to the jury the question of fact which was made by the plaintiffs below in answer to the alleged forfeiture. The case presented on the trial, as shown by the bill of exceptions, is as follows: —

The plaintiffs proved that the policy of insurance mentioned in the declaration was delivered, and the first premium received thereon, by one Stephens, a local agent of the defendant, in Columbus, Miss., and that said Eggleston, upon whose life said policy was issued, then and up to his death resided in the immediate vicinity; that soon after the issue of said policy the agency of said Stephens was revoked, and no other agent appointed at that place; that said Eggleston was notified by defendant to pay the next premium falling due to Johnston & Co., its agent at Savannah, Ga., and that he was also notified to pay the subsequent premiums to B. G. Humphreys & Co., the defendant's agents at Vicksburg, Miss., except the one falling due Nov. 11, 1871, all the other premiums falling due before the death of said Eggleston having been paid. It was also testified by the sons of said Eggleston, and by Goodwin, the cashier of the bank through which the other payments had been made, that if any notice was given by the defendant to said Eggleston, to whom and where the said premium due the eleventh day of November, 1871, should be made, that they did not know it; and that said Goodwin had the money to pay the said premium, which would have been paid had the notice been given; and after said premium became due and payable, said Goodwin, for said Eggleston, telegraphed to Johnston & Co., at Savannah, Ga., inquiring to whom payment should be made; who replied, to telegraph to B. G. Humphreys & Co., at Vicksburg; that B. G. Humphreys & Co. replied, to make payment to Baskerville & Yates, sub-agents at Macon, Miss., who held the payment receipt. On Dec. 30, 1871, a friend of said Eggleston tendered payment of the premium to Baskerville & Yates, which was refused unless a certificate of health was furnished; said Eggleston was then sick, and died on the 5th of January, 1872. One Williams, a clerk of Baskerville & Yates in their insurance business, and a witness for the defendant, testified that on the 1st of November, 1871, he mailed a

notice, post-paid, to said Eggleston, addressed to him at Columbus, Miss., to make payment to Baskerville & Yates, agents at Macon, Miss., and that they held the proper premium receipt. Macon, Miss., it was found, is thirty miles from Columbus by railroad.

Upon this evidence the judge charged the jury as follows. "The non-payment of the premium is admitted; and, if nothing more appears from the evidence, the plaintiffs will not be entitled to recover. To avoid the defence, it is insisted by the plaintiffs that the non-payment was caused by the defendants not having given to the said Eggleston notice of the place where payment was required, and, therefore, the fault of the company, and not that of Eggleston or the plaintiffs. The *onus* of proving the cause for non-payment is on the plaintiffs. [If you shall believe from the evidence that the payments of the premiums had, before that time, been made to such agents as the company had designated from time to time, and of which and to where said Eggleston was given notice by the defendant, and that no such notice was given to said Eggleston before the time the non-paid premium fell due, and that as soon as he did thereafter receive such notice he did tender to the designated agent the premium due, and that such failure to pay was caused by the want of such notice, then the policy was not forfeited, and the plaintiffs will be entitled to recover the amount of the policy, with six per cent interest, from sixty days after the company was notified of the death of Eggleston, less the amount of any unpaid premiums, with like interest, up to the death of said Eggleston.] If you shall believe from the evidence that the notices before given were by letter through the mail, and that the agent of the company authorized to receive payments of the premium mailed to said Eggleston, at his post-office, such notice within such time as, by due course of mail, he would have received it, and within a reasonable time for Eggleston to make payment, then Eggleston will be held to have received such notice, and the plaintiffs will not be entitled to recover. The *onus* or burden of proof of such notice having been given is on the defendant." The defendant excepted to so much of said charge as is included in brackets.

Mr. Matt. H. Carpenter for the plaintiff in error.

The plaintiff in error was under no obligation to keep a local agent in the vicinity of the residence of the assured, and give him notice thereof. The premiums on his policy were payable at the domicile of the company. *Insurance Company* v. *Davis*, 95 U. S. 425.

If the defendants in error sought to excuse the payment when due, on the ground that it was the custom or usage of the company to notify the holders of policies where and to whom to pay, they should have proved on the trial that such was known to be the general usage and custom of the company, or a particular usage of universal notoriety at the place where the insurance was effected. *Adams* v. *Otterback*, 15 How. 539.

The case does not show that the assured intended to pay the premium falling due Nov. 11, 1871, or that he made any effort, prior to its maturity, to ascertain to what agent he should make payment. On the contrary, the presumption is, that, after his death became imminent, his friends took the matter in hand, and attempted to revive the policy for the benefit of his children. The agent was, therefore, independently of the express words of the policy, justified, both in law and in fair dealing, in refusing to waive the forfeiture.

The fact that the agents of the company had notified the assured to whom to make payment of particular premiums which became due prior to Nov. 11, 1871, was not such an act on the part of the company as amounted to a permission to him not to make payment until notified.

The agent could not waive payment until notice was given by him to whom and where to pay it. On the contrary, the policy expressly prohibited him from so doing.

This provision cannot be set aside upon any act of the agent and the assured. It is as much a part of the contract as any other. *Chase* v. *Hamilton Insurance Co.*, 20 N. Y. 52; *Buffum* v. *Fayette Mutual Insurance Co.*, 8 Allen (Mass.), 360; *New York Life Insurance Co.* v. *Statham et al.*, 93 U. S. 31.

Mr. Philip Phillips, *contra*.

There was no error in the charge of the court below. The obligation to give the assured notice where and when to pay

premiums, can arise from the actions of the company, as well as from express words.

The principle that no one shall be permitted to deny that he intended the natural consequences of his acts, when he has induced others to rely on them, is as applicable to an insurance company as to an individual.

The doctrine of waiver, as asserted against such a company, to prevent the strict enforcement of conditions contained in its policy, is only another form for the doctrine of estoppel. *Insurance Company* v. *Wolff*, 95 U. S. 326.

That the assured acted in good faith, and was ready and anxious to continue the policy, is abundantly established by the evidence. He had the strongest inducement to do this, from the precarious condition of his health. His anxiety is shown by his prompt and repeated efforts to ascertain the agent to whom the payment was to be made.

The policy does not stipulate where the premiums were to be paid. The law of Mississippi, made for the convenience and security of its citizens, requires insurance companies to have agents in the State, and defines their duties and responsibilities. Rev. Code, 1857, p. 303, sects. 57–59.

MR. JUSTICE BRADLEY, after stating the case, delivered the opinion of the court.

We have recently, in the case of *Insurance Company* v. *Norton* (*supra*, p. 234), shown that forfeitures are not favored in the law; and that courts are always prompt to seize hold of any circumstances that indicate an election to waive a forfeiture, or an agreement to do so on which the party has relied and acted. Any agreement, declaration, or course of action, on the part of an insurance company, which leads a party insured honestly to believe that by conforming thereto a forfeiture of his policy will not be incurred, followed by due conformity on his part, will and ought to estop the company from insisting upon the forfeiture, though it might be claimed under the express letter of the contract. The company is thereby estopped from enforcing the forfeiture. The representations, declarations, or acts of an agent, contrary to the terms of the policy, of course will not be sufficient, unless sanctioned by the company itself.

Insurance Company v. *Mowry*, *supra*, p. 544. But where the latter has, by its course of action, ratified such declarations, representations, or acts, the case is very different.

In the present case, it appeared that the company had discontinued its agency at the place of residence of the insured soon after the policy was issued; and had given him notice by mail, from time to time, as the premium instalments became due, where and to whom to pay them, — sometimes at Savannah, several hundred miles, and sometimes at Vicksburg, a hundred and fifty miles, from his residence. Such notice, it would seem, had never been omitted prior to the maturity of the last instalment. The effect of the judge's charge was, that if this was the fact, and if no such notice had been given on that occasion, and the failure to pay the premium was solely due to the want of such notice, it being ready, and being tendered as soon as notice was given, no forfeiture was incurred. We think the charge was correct, under the circumstances of this case. The insured had good reason to expect and to rely on receiving notice to whom and where he should pay that instalment. It had always been given before; the office of the company was a thousand miles away; and they had always directed him to pay to an agent, but to different agents at different times.

Although, as we held in the case of *Insurance Company* v. *Davis* (95 U. S. 425), the legal effect of a policy, when nothing appears to the contrary, may be that the premium is payable at the domicile of the company; yet it cannot be expected or understood by the parties that the policy is, in ordinary circumstances, to be forfeited for a failure to tender the premium at such domicile, when the insured resides in a distant State, and has been in the habit, under the company's own direction, to pay to an agent there, and has received no notice that the contrary will be required of him. He would have a just right to say that he had been misled.

Let us look at the matter as it stands. The business of life insurance is in the hands of a few large companies, who are generally located in our large commercial cities. Take a company located, like the plaintiff in error, in New York, for example. It solicits business in every State of the Union.

where it is represented by its agents, who issue policies and receive premiums. Could such a company get one risk where it now gets ten, if it was expected or understood that it was not to have local agents accessible to the parties insured, to whom premiums could be paid, instead of having to pay them at the home office in New York? The universal practice is otherwise. Local agents are employed. The business could not be conducted on its present basis without them. Now, suppose the local agent is removed, or ceases to act, without the knowledge of the policy-holders, and their premiums become due, and they go to the local office to pay them, and find no agent to receive them; are these policies to be forfeited? Would the plaintiffs in error, or any other company of good standing, have the courage to say so? We think not. And why not? Simply because the policy-holders would have the right to rely on the general understanding produced by the previous course of business pursued by the company itself, that payment could be made to a local agent, and that the company would have such an agent at hand, or reasonably accessible. We do not say that this course of business would alter the written contract, or would amount to a new contract relieving the parties from their obligation to pay the premium to the company, if they can find no agent to pay to. That obligation remains. But we are dealing with the question of forfeiture for not paying at the very day; and, in reference to that question, it is a good argument in the mouths of the insured to say, "Your course of business led us to believe that we might pay our premiums at home, and estops you from exacting the penalty of forfeiture without giving us reasonable notice to pay elsewhere." The course of business would not prevent the company, if it saw fit, from discontinuing all its agencies, and requiring the payment of premiums at its counter in New York. But, without giving reasonable notice of such a change, it could not insist upon a forfeiture of the policies for want of prompt payment caused by their failure to give such notice. In the case of *Insurance Company* v. *Davis*, cited above, the agent's powers were discontinued by the occurrence of the war, of which all persons had notice; and the law of non-intercourse between belligerents prevented any payment at all; and the

policy became forfeited and ended without any fault attributable to either of the parties. That case, therefore, was entirely different from the present; and it was in consequence of such forfeiture in the absence of fault that we held, in the case of *New York Life Insurance Co.* v. *Statham et al.* (93 U. S. 24), that the insured was entitled to recover the equitable value of his policy.

In the present case, it seems to us that the charge of the judge was in substantial conformity to the principles we have laid down. The insured, residing in the State of Mississippi, had always dealt with agents of the company, located either in his own State or within some accessible distance. He had originally taken his policy from, and had paid his first premium to, such an agent; and the company had always, until the last premium became due, given him notice what agent to pay to. This was necessary, because there was no permanent agent in his vicinity. The judge rightly held, that, under these circumstances, he had reasonable cause to rely on having such notice. The company itself did not expect him to pay at the home office: it had sent a receipt to an agent located within thirty miles of his residence; but he had no knowledge of this fact, — at least, such was the finding of the jury from the evidence.

We think there was no error in the charge, and the judgment of the Circuit Court must be

Affirmed.

BISSELL v. HEYWARD.

1. A. made his will, appointing C. his executor, and devising his real property in South Carolina to B. for life; and, after the determination of that estate, to C., in trust, to support certain contingent remainders in fee. A. afterwards entered into a contract to sell the property to D., who entered into possession, and paid a part of the purchase-money. A. died without receiving the balance or making a conveyance, and C. duly qualified as his executor. *Held*, that a bill by B. against C. and D., to compel the specific performance of the contract, would lie.
2. A tender of payment must, to stop interest or costs, be kept good. It ceases to have that effect when the money is used by the debtor for any other purpose.

3. A decree, or a judgment, when rendered upon a contract payable in Confederate treasury notes, should be for a sum equal to the value of those notes, not in the gold coin, but in the legal-tender currency, of the United States at the time when and the place where they were payable.
4. Such notes can in no proper sense be regarded as commodities merely

APPEAL from the Circuit Court of the United States for the District of South Carolina.

William C. Heyward, who was seised in fee of certain lands in the State of South Carolina, made his last will and testament, bearing date Jan. 20, 1852. So much thereof as relates to them is as follows:—

"I give to my brother, Henry Heyward, of New York" (here is a description of the lands), "for and during the term of his natural life, and, after the determination of that estate, I give the same to my friend, William C. Bee, and his heirs, to prevent the contingent remainders hereinafter limited from being barred; in trust, nevertheless, during the lifetime of my said brother, to apply the income thereof to his use and benefit; and, from and after his decease, I give the use of the same estate, real and personal, to his eldest son, Henry Heyward, Jr., if then living, until he attains the age of twenty-one years; and if he should survive his father, and attain the age of twenty-one years, to him and his heirs for ever: but in case the said Henry Heyward, Jr., should not survive his father, and attain the age of twenty-one years, then I give the whole of the said estate, real and personal, after the decease of my brother, Henry Heyward, for the use of the person who may thereafter, from time to time, sustain the character of heir male of the body of my said brother, Henry Heyward, as such term was used in the common law before the abolition of the rights of primogeniture, until such person shall attain the age of twenty-one years, or the expiration of twenty-one years from the death of my said brother, whichever may first happen; and, after the happening of either of those events, to the then heir male of the body of my brother, absolutely and for ever."

On the eighteenth day of June, 1863, William C. Heyward contracted to sell, for $120,000, said lands, to John B. Bissell; who took immediate possession of them, which he has ever since retained. On July 31, following, he paid $20,000 of the purchase-money. During that year, and before the completion of the purchase, Heyward died, and said Bee, appointed the executor of his will, duly qualified as such. Owing to the civil war

and other causes, matters remained unaltered in their main features until March, 1870, when said Henry Heyward, a citizen of New York, filed his bill against said Bissell and said Bee, citizens of South Carolina, to compel the specific performance, by Bissell, of his agreement to purchase. The answer of Bissell admits the agreement and his possession of the property, and his payment of $20,000; and alleges that he was provided with the means of paying the balance of the purchase-money; that neither said William C. Heyward, nor, since his death, said Bee, tendered him a conveyance; and that he was willing to pay when he should receive a valid conveyance; that he sold sixty-three bales of cotton, for cash in Confederate notes, and on Feb. 11, 1864, tendered the said balance, in said notes, to the executor, who declined to receive them, on the ground that he could not make a good title. Bee, in his answer, admitted the tender to him by Bissell, and his refusal to accept it, on the ground that he was advised that he could neither make a title nor safely accept payment in Confederate currency. It was admitted, on the hearing below, that said money was tendered at that date, in such currency; that the parties through whom a good title could be made lived in New York; and that, after Bee's refusal to accept the notes tendered, Bissell used them for other purposes.

It does not appear by the pleadings, the evidence, or the agreed statement of facts on file, whether Henry Heyward, Jr., who was living when the bill was filed, and had then attained the age of twenty-one years, is now living. There is neither allegation nor proof of his death.

The court decreed that Bissell should perform his contract of purchase, and pay, in United States currency, a sum equal to the value of $100,000 in Confederate currency on June 18, 1863, the day of sale, with interest thereon until Feb. 11, 1864; from and after which day he should pay interest only on such a sum as was the value of $100,000 on said 18th of June, less its value on said 11th of February; said values and interest to be ascertained by the clerk of the court to whom the cause was referred, as master, to state and report the same: that upon Bissell's making the payment as stated and reported, that the clerk, "as master to said William C. Bee, executor of William

C. Heyward," convey the premises in fee-simple; but that, upon his failure so to pay, the master should sell the property, at public auction, for cash.

Said Henry Heyward died before the execution of the decree. On Nov. 23, 1874, Zefa Heyward, his wife, Zefita Heyward, his daughter, and Frank Heyward, his son, filed their bill of revivor, reciting the original bill, the proceedings thereunder, the reference to the master, the death of said Henry,—leaving a last will and testament, which was duly proved before the surrogate of the county of New York,—their appointment to execute the same, and that said Zefa alone took upon herself the execution thereof, and qualified accordingly, and praying that the bill might be revived. This bill was duly served no answer was made, and an order of revivor was entered accordingly.

The master subsequently reported that the balance found by him to be due upon the contract was $28,353.50; and that, in reaching that result, he compared the value of the Confederate currency, in which the contract was payable, with United States paper currency at the date of the contract and of the tender. He found that, on the 18th of June, 1863, $1 in United States currency was worth $5.20 in Confederate currency; and that on the 14th of February, 1864, the value was $1 to $13.01. The court confirmed the report, Dec. 15, 1874; and decreed that the interlocutory decree previously rendered be carried into execution. Bissell thereupon appealed to this court, Bee declining to join in the appeal.

Mr. William A. Maury for the appellant.

When a vendor of real estate dies before he has received the purchase-money and made a conveyance, the bill against the vendee to enforce his specific performance of the contract must be filed by the personal representative of the vendor. Dart, Vendors, 468; Story, Eq. Pl., sects. 160–177.

Heyward, the original complainant, was but a life-tenant. The two contingencies on which the remainder to his son depended had not both happened; for, although the son had attained his majority, the other condition, of his surviving his father, had not happened at the filing of the bill. Nor had the executor then any estate. His remainder, as trustee to preserve

the contingent remainders, was itself still contingent; for Henry Heyward's life-estate was not spent, and if his son should survive his father, and so his estate become vested, there would no longer be any call for a trustee to preserve remainders. It comes to this, then, that the fee had descended to the testator's heir-at-law. 1 Fearne, pp. 353–355. The bill does not aver who is that heir, so that (according to the case thereby made) the fee is not represented. Again, the will, by the testator's sale to Bissell, was in equity revoked; and, although it has still operation at law, those taking, as devisees, the title of the estate sold, would be held by equity as trustees for the purchaser. It is apparent, therefore, that Henry Heyward had no beneficial interest whatever in or touching the lands when he filed the bill; and his representatives, in whose name the suit was revived, had no interest. His will is not in evidence, and it is impossible to say what was the character of that instrument. Besides, the bill of revivor avers that Zefa Heyward alone qualified as executrix.

Henry Heyward being now dead, his son, Henry Heyward, Jr., — who, according to the bill, was of age, — is, if alive, seised of the fee; but he is not a party to this suit. It would seem, then, that the bill is fatally defective as to parties.

There is a total failure by the original complainant to show a performance of the contract by the tender of a conveyance by the representatives of the vendor. *Prothro* v. *Smith*, 6 Rich. (S. C.) Eq. 324.

The value of United States currency between the dates when $20,000 was paid and the balance of the purchase-money tendered was variable and fluctuating; and gold coin was the only proper standard by which to measure the value of Confederate notes, in which the contract was solvable. They were, as declared in *Planters' Bank* v. *Union Bank* (16 Wall. 502), "a commodity, not money;" and the tender of them, with no other objection on the part of the creditor than that he could neither safely accept them nor make a good title, discharged the debt. 2 Pars. Contr., pp. 163–165. At the utmost, Bissell, after making the tender, was only liable to the estate as a bailee of the notes, and the whole function of the court was limited to determining what that liability was.

Mr. Edward McCrady, contra.

It is settled in South Carolina, that, where, after a devise, land has been sold by the testator, the devisee takes the estate in trust for the purchaser, and is the proper party to convey. *Rose* v. *Drayton*, 4 Rich. (S. C.) Eq. 260. In the present case, there was no devise in fee directly to any one. There was a devise for life, and the appointment of a trustee to preserve the contingent remainders limited after the determination of that estate. Under these circumstances, the safest mode of conveying was through the instrumentality of a court of equity. This bill was therefore filed, as Bissell then held and still holds possession; claiming the lands under his contract, and only raising the question as to what was due thereon. His taking possession thereunder must be regarded as a waiver of objection to the title of William C. Heyward. No question is, however, made as to that title; and Henry Heyward's allegation in the original bill, that his feoffment, with livery of seisin, and a release by Bee, would have absolutely transferred that title; and that he offered so to transfer it to Bissell is not denied in the answer. There has been, therefore, no default whatever on the part of the vendor or his representatives.

The notes of the Confederate States must be considered in the same light as if they had been issued by a foreign government temporarily occupying a part of the territory of the United States, and their value was properly scaled to that of the legal-tender notes of the United States. *Dooley* v. *Smith*, 13 Wall. 604; *Thorington* v. *Smith*, 8 id. 1.

The tender in February, 1864, relied on by the appellant to discharge the debt, was not kept good after that date; and did not, therefore, even discharge interest and costs. *Giles* v. *Hart*, 3 Salk. 343; *Sweatland* v. *Squires*, 2 id. 623.

MR. JUSTICE HUNT, after stating the case, delivered the opinion of the court.

It is objected that there is a fatal defect of parties complainant. The point of this objection is that Henry Heyward and William C. Bee were not able together to make a title that ought to be satisfactory to Bissell, and hence that the decree should be reversed.

The will of William C. Heyward took effect only upon his death. Until the occurrence of that event, the devisees therein named had no more title to or interest in the property in question than if their names had not been mentioned in the will. If he had consummated his contract with Bissell by executing a deed of the property, this would have worked an absolute revocation of the devise as to this property. The execution of the contract (with the partial payment thereon) was a transfer in equity of the title of the land to Bissell; leaving in the representatives of William C. Heyward simply a naked title as trustee for Bissell, to be conveyed upon performance on his part. By the terms of the will, this legal title was vested in William C. Bee, the trustee to preserve remainders.

Henry Heyward was tenant for life, and as such offered to convey to Bissell, "by feoffment, and livery of seisin, and to procure the release of right of entry and action by William C. Bee, the remainder-man for preserving contingent remainders;" and he avers in his bill that this would have made a good and effectual conveyance of the legal estate.

Bee held the legal title under the will, and his title to the legal estate continued in force as long as the remainders were contingent; and there is nothing in any part of the record showing that such was not the condition of the title when Heyward offered to convey, and that it is not so at the present time.

Chancellor Kent says (Com., vol. iv. p. 256), "The trustees are entitled to a right of entry in case of a wrongful alienation by the tenant for life, or whenever his estate for life determines in his lifetime by any other means. The trustees are under the cognizance of a court of equity, and it will control their acts, and punish them for a breach of trust; and if the feoffment be made by the purchaser with notice of the trust, as was the fact in *Chudleigh's Case*, a court of chancery will hold the lands still subject to the former trust. But this interference of equity is regulated by the circumstances and justice of the particular case. The court may, in its discretion, forbear to interfere; or it may and will allow, or even compel, the trustees to join in a sale to destroy the contingent remainder, if it should appear that such a measure would answer the

uses originally intended by the settlement." To this he cites many authorities.

We think this objection is not well taken.

Was there error in the amount decreed to be paid?

One of the statements of fact in the case sets forth that Bissell tendered the money; and fails to state that he deposited it, or in any manner set it apart or appropriated it for the purpose of the tender. The other states that he used the money he had thus provided. The legal effect is the same. To have the effect of stopping interest or costs, a tender must be kept good; and it ceases to have that effect when the money is used by the debtor for other purposes. *Roosvelt* v. *The Bull's Head Bank*, 45 Barb. (N. Y.) 579; *Giles* v. *Hart*, 3 Salk. 343; *Sweatland* v. *Squire*, 2 id. 623.

The defendant insists that the value of the Confederate notes should be reduced to gold or sterling exchange, which would still farther depreciate their value.

This objection cannot be sustained. By the laws of the United States, all contracts between individuals could then be lawfully discharged in the legal-tender notes of the United States. These notes, and not gold or sterling exchange, were the standard of value to which other currencies are to be reduced to ascertain their value. *Knox* v. *Lee*, 12 Wall. 457; *Thorington* v. *Smith*, 8 id. 1; *Dooley* v. *Smith*, 13 id. 604; Rev. Stat. So. Car., p. 285.

Confederate notes, although without the authority of the United States, and, indeed, in hostility to it, formed the only currency of South Carolina at the date of the transactions in question. United States currency was unknown, except when found upon the person of the soldiers of the United States taken and held as prisoners.

Confederate notes can in no proper sense be treated as commodities merely. The contract in question was made payable in terms in dollars; but both parties agree in writing that Confederate-note dollars were intended. The $20,000 was paid in Confederate notes; and, when the defendant tendered his $100,000, he tendered it in Confederate notes as dollars, and he obtained them by selling sixty-three bales of cotton for Confederate dollars. *Stewart* v. *Salamon*, 94 U. S. 434.

Decree affirmed.

INSURANCE COMPANY v. BRUNE'S ASSIGNEE.

1. The rule at law that the pendency of a former action between the same parties for the same cause is pleadable in abatement to a second action, provided the actions be in courts of the same State, holds in equity.
2. The plea of a former suit pending in equity for the same cause in a foreign jurisdiction will not abate an action at law in a domestic tribunal, or authorize an injunction against prosecuting such action.

APPEAL from the Circuit Court of the United States for the District of Maryland.

The facts are stated in the opinion of the court.

Mr. Henry E. Davies and *Mr. Edward O. Hinckley* for the appellant. *Mr. F. W. Brune* and *Mr. J. M. Harris*, *contra*.

MR. JUSTICE STRONG delivered the opinion of the court.

This was a bill by the Mutual Life Insurance Company of New York for an injunction upon Horatio L. Whitridge, assignee of William H. Brune, enjoining him against further prosecuting two actions at law which he had commenced in the Circuit Court of the United States for the District of Maryland, against the complainant, upon two policies of insurance issued by it, in the name of William H. Brune, the 18th of January, 1872, on the life of John S. Barry; one for $20,000, and the other for $5,000.

The material averments of the bill are the following: —

1. That the complainant, a New York corporation, on the 11th of January, 1867, issued a policy of life insurance to Rosalie C. Barry, wife of John S. Barry, for $20,000, on the life of her husband; and on the 9th of December, 1870, issued to her a second policy, on the same life, insuring $5,000.

2. That the premiums were regularly paid until December, 1871, and January, 1872.

3. That about the latter part of December, 1871, and the beginning of January, 1872, an agreement was made between Mrs. Barry, Mr. Barry, and Mr. Brune, for the assignment or transfer of the policies to the latter, and that in pursuance of the agreement, and in accordance with a mode of proceeding before used by the complainant in cases of insurance on the lives

of married women, the policies were permitted, with the consent of all parties interested, except the complainant, to lapse, — that is to say, to become forfeited, — with the intent, however, to have the same renewed or reissued in Brune's name.

4. That, as evidence of such intention, Brune (as whose assignee Whitridge, the defendant, claimed) united with John S. Barry in signing a paper called "a declaration to be made and signed in case of issuing new policy after lapse," dated Dec. 16, 1871, referring to and adopting the original application made by Mrs. Barry for insurance, dated Dec. 9, 1870, and signed by her; that he also united with Mr. Barry in signing another paper, dated Jan. 12, 1872, adopting Mrs. Barry's original application for insurance, dated Jan. 11, 1867.

5. That Mr. Barry did not undergo a new medical examination; that no other applications were made for the two insurances (upon which the suits were brought) than those made by Mrs. Barry in 1867 and 1870, and so, as aforesaid, adopted by Mr. Brune; and that thereupon the two policies issued to Mrs. Barry were surrendered and cancelled.

6. That, at the time when the original policies issued to Mr. Barry were cancelled, two others for the same amount, on the life of the said John S. Barry, were substituted therefor: that they were issued to William H. Brune with like premiums and having the same numbers as those of the cancelled policies; differing only in the fact that the premiums were made payable semi-annually, instead of annually as theretofore, and that Brune paid up the premiums that had before fallen due and that remained unpaid.

7. That in February, 1872, Brune assigned these policies to Whitridge (Harris being now substituted as Brune's assignee or trustee in place of Whitridge).

8. That John S. Barry died in March, 1872.

9. That shortly after, or about April 4, 1872, Mrs. Barry filed, in the Supreme Court for the city and county of New York, her bill of complaint against the complainant in this bill, and against both Brune and Whitridge, in which she alleged substantially what is hereinbefore set forth, and also complained that the novation of the policies, or the lapsing and reissue as aforesaid, was without her consent; that it was done

after her signing some paper by reason of certain persuasions of her husband when he was embarrassed in business and disturbed in mind; that she did not act voluntarily and freely; that Brune acquired no rights under the said new policies, nor did Whitridge by the assignment to him; and she prayed the company might be enjoined against paying to Whitridge the amounts due thereon.

The bill and proceedings in the New York case were filed, and made a part of the present complainant's bill.

10. That, as appeared in those proceedings, pursuant to an agreement of the parties and an order of the court, this complainant, the insurance company, deposited the sums named in the two policies in a trust company, to the credit of the case; and the court ordered that the complainant should be discharged, and that the action should be discontinued as to it.

11. That, notwithstanding the agreement and order and the payment, Whitridge, the defendant, had afterwards, in September, 1872, brought two suits on the two new policies in the Circuit Court of the United States for the District of Maryland, the same suits the prosecution of which the complainant sought by this bill to have enjoined.

12. That the prosecution of these suits, if successful, would result in compelling the complainant to pay the same policies twice, and might give to Whitridge double payment.

Most of the material averments of this bill were admitted by the answer. It averred, in addition, that the original policies were assigned to Brune as collateral securities for loans Brune had made to Mr. Barry, and that the permitted lapse and the issue of the new policies were intended only to make the assignment effective. It denied, however, that the new policies we e in substitution for the policies surrendered, and asserted that they were separate and new contracts. It admitted the execution of the agreement or stipulation in the New York case; but alleged that it was without Brune's knowledge or consent, and alleged also that it was not intended to surrender or affect in any way the right of the defendant under the two policies issued to Brune and assigned to him.

Such was the case when it came on for hearing; the parties having agreed that Mrs. Barry's bill of complaint might be

read, as also the answers of Brune and Whitridge thereto, the stipulation made in the case, the order of the court that the company pay the amount of the policies, less the costs, into court, a subsequent order abrogating the former and the stipulation, together with a pending appeal therefrom.

Upon this showing, the Circuit Court refused the injunction asked for, and dismissed the complainant's bill. We agree with the counsel for the appellee, that whether the Circuit Court erred or not must be determined in view of the facts as they appeared when the decision was made. But we do not admit, as it is argued, that Mrs. Barry in her bill claimed only what was assured to her by the original policies. She claimed a decree against the insurers, that they should pay to her. She asserted that the original policies had been surrendered and cancelled, and she claimed that Brune and Whitridge were asserting rights adverse to hers. She charged in effect that the assignments of those policies she had made had been obtained from her by duress, through misrepresentation, and without any present consideration. The surrender and reissue to Brune concerted between him and Mr. Barry, the payment of the premium of the substituted policies with Mrs. Barry's dividends and money, the identity of the numbers of the new policies with those of the old, and the fact that the stipulated premiums were the same, adjusted according to the age of Mr. Barry when the first policies were granted, and paid from the times when under those policies they were due,—were set forth as proofs that the substituted ones were only continuations of the first insurance, and that in equity they were her property. Neither Brune's nor Whitridge's answer, both of which were in evidence, effectually controverted this. Brune's substantially admitted it. In his answer, he everywhere speaks of himself as the assignee of the original policies, asserts Mrs. Barry's assignments as the foundation of his right, alleges that the polices were suffered to lapse and were surrendered, that they might be renewed and continued for his benefit, and alleges expressly that "the two policies issued in January, 1872, constituted the only claim on the said Mutual Life Insurance Company, on account of insurance on the life of the said Barry, and that the plaintiff has no claim whatsoever to the

said policies, or either of them, or to the sums secured thereby, until the indebtedness of the said Barry and of his firm, to secure which the said policies were assigned as aforesaid, shall have been fully paid and satisfied." Thus the answer implies a clear admission, that in equity Mrs. Barry is the owner of the new policies, subject only to Brune's right (whatever it may be) to hold them as a collateral security.

The case in the New York Supreme Court, therefore, involved the same controversy as that exhibited in the two Maryland suits; and the complainant here and Whitridge are parties in each. Alike in the bill and in the action at law, it is a vital question whether the insurers are liable for the sums insured by the policies of January, 1872, and whether they are liable to Whitridge as assignee of Brune. Hence, if there were a final decree in the New York case against the complainant here, the present appellee would necessarily fail in the action he has brought in Maryland. That decree would be pleadable in bar to his suits, and the complainant would have complete protection at law.

But the difficulty in the appellant's way is, that, when this case was heard in the court below, the record of the New York case exhibited no final decree. The order that the amount of the policies might be paid into the trust company to the credit of the case, and that the company should be discharged, had been set aside; and the money paid under the order had been directed to be returned. All that appeared, then, was that a bill in equity was pending in a foreign jurisdiction, when the appellee's suits at law were brought to enforce the payment of the policies to Mrs. Barry, rather than to Brune or his assignee, and that both the present complainant and the present defendant were parties to that bill.

This, we think, was not sufficient to justify the injunction for which the appellant prayed. At law, the pendency of a former action between the same parties for the same cause is pleadable in abatement to a second action, because the latter is regarded as vexatious. But the former action must be in a domestic court; that is, in a court of the State in which the second action has been brought. *Maule* v. *Murray*, 7 T. R. 470; *Buckner* v. *Finley*, 2 Pet. 586; *Browne & Seymour* v. *Joy*, 9 Johns. (N. Y.) 221; *Smith et al.* v. *Lathrop et al.*, 44 Pa. St. 326.

The rule in equity is analogous to the rule at law. Story, Eq. Pl., sect. 741. In *Foster* v. *Vassall* (3 Atk. 587), Lord Hardwicke said: "The general rule of courts of equity with regard to pleas is the same as in courts of law, but exercised with a more liberal discretion." In *Lord Dillon* v. *Alvarez* (4 Ves. 357), a plea of a pending suit in a court of chancery in Ireland was overruled in the English Court of Chancery. Certain it is that the plea of a suit pending in equity in a foreign jurisdiction will not abate a suit at law in a domestic tribunal. This was shown in a very able decision made by the Supreme Court of Connecticut, in *Hatch* v. *Spofford* (22 Conn. 485), where the authorities are learnedly and logically reviewed. See also 7 Metc. (Mass.) 570, and 16 Vt. 234.

If, then, a bill in equity pending in a foreign jurisdiction has no effect upon an action at law for the same cause in a domestic forum, even when pleaded in abatement; if, still more, it has no effect when pleaded to another bill in equity, as the authorities show, — it is impossible to see how it can be a basis for an injunction against prosecuting a suit at law. It follows that the refusal of an injunction by the Circuit Court was not erroneous.

It is contended, however, that if the appellant was not entitled to the injunction asked for, the bill should not have been dismissed, but that it should have been retained, until the final disposition of the case in New York. The Supreme Court in that State having first obtained possession of the subject-matter of the controversy, as well as jurisdiction of the parties, it is argued, had a right to proceed to a final determination. In view of this fact, we concede the Circuit Court might have retained this bill. It does not appear, however, that such a retention was asked. Nor was it necessary for the purposes of justice. As we have already remarked, if a final decree be made by the Supreme Court, it will, if pleaded, be a bar in the Maryland courts; and if a judgment be rendered in the latter, the New York court, having jurisdiction of the parties, will be able to determine to whom in equity the judgment belongs.

Decree affirmed.

RAILROAD COMPANY v. COLLECTOR.

1. Under the provisions of the act of March 3, 1877 (19 Stat. 344), the cost of printing all records in this court, after Oct. 1 in that year, which is paid by the government, must be taxed against the losing party.
2. The appellee, the successful party in this court, caused the printing of the record, after said last-mentioned date, to be done at his own expense, but at a cost no greater than if the work had been done at the government printing-office. *Held*, that such cost be taxed against the appellant.

MOTION to tax the expense of printing the record as part of the costs in this case.

Mr. James K. Edsall in support of the motion.

Mr. Joseph E. McDonald and *Mr. R. P. Ranney*, *contra*.

MR. CHIEF JUSTICE WAITE delivered the opinion of the court.

The first appropriation by Congress to pay the expense of printing the records of this court was made June 27, 1834. 4 Stat. 695. Since that time until the present term the printing has been done by the government, without charge to litigants. In the appropriation act of the last Congress, however, passed March 3, 1877, it was provided as follows: —

"And there shall be taxed against the losing party in each and every cause pending in the Supreme Court of the United States, or in the Court of Claims of the United States, the cost of printing the record in such case, which shall be collected, except when the judgment is against the United States, by the clerks of said courts respectively, and paid into the treasury of the United States; but this shall only apply to records printed after the 1st of October next." 19 Stat. 344.

This provision is still in force, so that now the cost of printing all records in this court paid by the government must, by law, be taxed to the losing party.

The appellee caused the record in this case to be printed after Oct. 1, at his own expense, as the congressional appropriation was exhausted before it became necessary to do the work. The cost was no greater than it would have been at the government printing-office. Under these circumstances, as

the decree below has been affirmed, we think the motion should be granted, and therefore order that the amount paid by the appellee for printing the record in this case be taxed against the appellant.

Motion granted.

EDWARDS v. KEARZEY.

The remedy subsisting in a State when and where a contract is made, and is to be performed, is a part of its obligation; and any subsequent law of the State, which so affects that remedy as substantially to impair and lessen the value of the contract, is forbidden by the Constitution of the United States, and, therefore, void.

ERROR to the Supreme Court of the State of North Carolina.

This action was commenced by Leonidas C. Edwards, March 31. 1869, in the Superior Court of Granville County, North Carolina, against Archibald Kearzey, to recover the possession of certain lands in that county. They were levied upon and sold by the sheriff, by virtue of executions sued out upon judgments rendered against Kearzey, on contracts which matured before April 24, 1868, when the Constitution of North Carolina took effect, the tenth article of which exempts from sale under execution or other final process, issued for the collection of any debt, the personal property of any resident of the State, and "every homestead, and the dwelling and buildings used therewith, not exceeding in value $1,000, to be selected by the owner thereof." Prior to that date, under statutes since repealed, certain specified articles of small value, and such other property as the freeholders appointed for that purpose might deem necessary for the comfort and support of the debtor's family, not exceeding in value $50 at cash valuation, and fifty acres of land in the county and two acres in the town of not greater value than $500, were exempt from execution. The lands in question were owned and occupied by Kearzey as a homestead, and as such were set off to him pursuant to the mode prescribed by the legislation for carrying the constitutional provision into effect. He had no other lands, and they did not exceed $1,000 in value.

Edwards was the purchaser at the sheriff's sale of said lands, and received a deed therefor.

The court found for Kearzey, upon the ground that so much of said art. 10 as exempts from sale, under execution or other final process obtained on any debt, land of the debtor of the value of $1,000, and the statutes enacted in pursuance thereof, embrace within their operation executions for debts which were contracted before the adoption of said Constitution; and that said article and said statutes, when so interpreted and enforced, are not repugnant to art. 1, sect. 10, of the Constitution of the United States, which ordains that no State shall pass any law impairing the obligation of contracts.

Judgment having been rendered upon the finding, it was, on appeal, affirmed by the Supreme Court of the State. Edwards then sued out this writ of error.

Mr. Joseph B. Batchelor and *Mr. Edward Graham Haywood* for the plaintiff in error.

A law of a State, which is impeached upon the ground that it impairs the obligation of a contract, derives no additional authority as against the prohibition of the Federal Constitution, by reason of the fact that it is embodied in a State Constitution. *Railroad Company* v. *McClure*, 10 Wall. 511; *White* v. *Hart*, 13 id. 646; *Gunn* v. *Barry*, 15 id. 610; *Jefferson Branch Bank* v. *Skelly*, 1 Black, 436; *Dodge* v. *Woolsey*, 18 How. 331.

Such a law, exempting from sale under execution any substantial part of the debtor's property not so exempt at the time the debt was contracted, impairs the obligation of the contract, and is repugnant to the Constitution of the United States, and void. *Gunn* v. *Barry*, *supra*; *Nichols's Assignee* v. *Eaton et al.*, 91 U. S. 716; *Green* v. *Biddle*, 8 Wheat. 1; *Bronson* v. *Kinzie*, 1 How. 311; *McCracken* v. *Hayward*, 2 id. 608; *Planters' Bank* v. *Sharp*, 6 id. 301; *Von Hoffman* v. *Quincy*, 4 Wall. 535; *Lessley* v. *Phipps*, 49 Miss. 790; *The Homestead Cases*, 22 Gratt. (Va.) 266.

The decisions of this court have given a uniform construction to the constitutional provision which prohibits a State from passing any law impairing the obligation of contracts. From them the following propositions are adduced:—

1. The obligation of a contract is the duty of performance according to its terms, the remedy or means of enforcement being a part of the "obligation," which the States cannot by legislation impair. The municipal law enters into and forms a part of this obligation, and to that the contracting parties must be considered as referring, in order to enforce performance.

2. The State, if it modifies the remedy, must provide one as efficient and substantial as that subsisting when the contract was made.

3. The remedy is inseparable from the obligation, otherwise the contract would be of the nature of those imperfect obligations or moral duties, subject to the mere caprice and will of individuals.

4. Whilst the State is left free to prescribe the modes of suit and forms of process, it cannot clog the remedy with conditions and restrictions so as materially to impair its efficiency. *Fletcher* v. *Peck*, 6 Cranch, 87; *Green* v. *Biddle*, 8 Wheat. 1; *Sturges* v. *Crowninshield*, 4 id. 122; *Ogden* v. *Saunders*, 12 id. 213; *Bronson* v. *Kinzie*, 1 How. 311; *McCracken* v. *Hayward*, 2 id. 608; *Curran* v. *Arkansas*, 13 id. 304; *Freeman* v. *Howe*, 24 id. 450; *Von Hoffman* v. *Quincy*, 4 Wall. 535; *Hawthorne* v. *Calef*, 2 id. 10; *White* v. *Hart*, 13 id. 646; *Gunn* v. *Barry*, 15 id. 610; *Walker* v. *Whitehead*, 16 id. 314.

Mr. A. W. Tourgee, contra.

The decided cases do not affirm that the obligation of a contract includes the whole remedy, 2 Kent, Com. 397; 3 Story, Com., sect. 1392; *Sturges* v. *Crowninshield*, 4 Wheat. 122; *Mason* v. *Haile*, 12 id. 370; *Beers* v. *Haughton*, 9 Pet. 329; *Cook* v. *Moffat*, 5 How. 295; but, on the contrary, courts have declared that the remedy is no part of the obligation. *Moore* v. *Gould*, 11 N. Y. 281; *Jacobs* v. *Smallwood*, 63 N. C. 112; *Hill* v. *Kessler*, id. 437; *Garrett* v. *Cheshire*, 69 id. 396; *Wilson* v. *Sparks*, 72 id. 208; *Edwards* v. *Kearzey*, 75 id. 409. The precise question which this record presents may therefore be considered an open one. The homestead provision of the Constitution of North Carolina does not deny the creditor's right, but regulates the manner in which it shall be enforced.

It affects his remedy only incidentally, in the performance

of a high public behest. The safety and health of the Commonwealth are above private right. The sacredness of private property must yield to the imperious demands of public necessity. When two rights are in conflict, the greater must prevail. *Munn* v. *Illinois*, 94 U. S. 113; *Chicago, Burlington, & Quincy Railroad Co.* v. *Iowa*, id. 155; *Peik* v. *Chicago & North-Western Railway Co.*, id. 164.

MR. JUSTICE SWAYNE delivered the opinion of the court.

The Constitution of North Carolina of 1868 took effect on the 24th of April in that year. Sects. 1 and 2 of art. 10 declare that personal property of any resident of the State, of the value of $500, to be selected by such resident, shall be exempt from sale under execution or other final process issued for the collection of any debt; and that every homestead, and the buildings used therewith, not exceeding in value $1,000, to be selected by the owner, or, in lieu thereof, at the option of the owner, any lot in a city, town, or village, with the buildings used thereon, owned and occupied by any resident of the State, and not exceeding in value $1,000, shall be exempt in like manner from sale for the collection of any debt under final process.

On the 22d of August, 1868, the legislature passed an act which prescribed the mode of laying off the homestead, and setting off the personal property so exempted by the Constitution. On the 7th of April, 1869, another act was passed, which repealed the prior act, and prescribed a different mode of doing what the prior act provided for. This latter act has not been repealed or modified.

Three several judgments were recovered against the defendant in error: one on the 15th of December, 1868, upon a bond dated the 25th of September, 1865; another on the 10th of October, 1868, upon a bond dated Feb. 27, 1866; and the third on the 7th of January, 1868, for a debt due prior to that time. Two of these judgments were docketed, and became liens upon the premises in controversy on the 16th of December, 1868. The other one was docketed, and became such lien on the 18th of January, 1869. When the debts were contracted for which the judgments were rendered, the exemption laws in force were the acts of Jan. 1, 1854, and of Feb. 16, 1859. The first-named

act exempted certain enumerated articles of inconsiderable value, and "such other property as the freeholders appointed for that purpose might deem necessary for the comfort and support of the debtor's family, not exceeding in value $50, at cash valuation." By the act of 1859, the exemption was extended to fifty acres of land in the county, or two acres in a town, of not greater value than $500.

On the 22d of January, 1869, the premises in controversy were duly set off to the defendant in error, as a homestead. He had no other real estate, and the premises did not exceed $1,000 in value. On the 6th of March, 1869, the sheriff, under executions issued on the judgments, sold the premises to the plaintiff in error, and thereafter executed to him a deed in due form. The regularity of the sale is not contested.

The act of Aug. 22, 1868, was then in force. The acts of 1854 and 1859 had been repealed. *Wilson* v. *Sparks*, 72 N. C. 208. No point is made upon these acts by the counsel upon either side. We shall, therefore, pass them by without further remark.

The plaintiff in error brought this action in the Superior Court of Granville County, to recover possession of the premises so sold and conveyed to him. That court adjudged that the exemption created by the Constitution and the act of 1868 protected the property from liability under the judgments, and that the sale and conveyance by the sheriff were, therefore, void. Judgment was given accordingly. The Supreme Court of the State affirmed the judgment. The plaintiff in error thereupon brought the case here for review. The only Federal question presented by the record is, whether the exemption was valid as regards contracts made before the adoption of the Constitution of 1868.

The counsel for the plaintiff in error insists upon the negative of this proposition. The counsel upon the other side, frankly conceding several minor points, maintains the affirmative view. Our remarks will be confined to this subject.

The Constitution of the United States declares that "no State shall pass any . . . law impairing the obligation of contracts."

A contract is the agreement of minds, upon a sufficient con-

sideration, that something specified shall be done, or shall not be done.

The lexical definition of "impair" is "to make worse; to diminish in quantity, value, excellence, or strength; to lessen in power; to weaken; to enfeeble; to deteriorate." Webster's Dict.

"Obligation" is defined to be "the act of obliging or binding; that which obligates; the binding power of a vow, promise, oath, or contract," &c. Id.

"The word is derived from the Latin word *obligatio*, tying up; and that from the verb *obligo*, to bind or tie up; to engage by the ties of a promise or oath, or form of law; and *obligo* is compounded of the verb *ligo*, to tie or bind fast, and the preposition *ob*, which is prefixed to increase its meaning." *Blair* v. *Williams* and *Lapsley* v. *Brashears*, 4 Litt. (Ky.) 65.

The obligation of a contract includes every thing within its obligatory scope. Among these elements nothing is more important than the means of enforcement. This is the breath of its vital existence. Without it, the contract, as such, in the view of the law, ceases to be, and falls into the class of those "imperfect obligations," as they are termed, which depend for their fulfilment upon the will and conscience of those upon whom they rest. The ideas of right and remedy are inseparable. "Want of right and want of remedy are the same thing." 1 Bac. Abr., tit. Actions in General, letter B.

In *Von Hoffman* v. *City of Quincy* (4 Wall. 535), it was said: "A statute of frauds embracing pre-existing parol contracts not before required to be in writing would affect its validity. A statute declaring that the word 'ton' should, in prior as well as subsequent contracts, be held to mean half or double the weight before prescribed, would affect its construction. A statute providing that a previous contract of indebtment may be extinguished by a process of bankruptcy would involve its discharge; and a statute forbidding the sale of any of the debtor's property under a judgment upon such a contract would relate to the remedy."

It cannot be doubted, either upon principle or authority, that each of such laws would violate the obligation of the contract,

and the last not less than the first. These propositions seem to us too clear to require discussion. It is also the settled doctrine of this court, that the laws which subsist at the time and place of making a contract enter into and form a part of it, as if they were expressly referred to or incorporated in its terms. This rule embraces alike those which affect its validity, construction, discharge, and enforcement. *Von Hoffman* v. *City of Quincy*, *supra*; *McCracken* v. *Hayward*, 2 How. 508.

In *Green* v. *Biddle* (8 Wheat. 1), this court said, touching the point here under consideration: "It is no answer, that the acts of Kentucky now in question are regulations of the remedy, and not of the right to the lands. If these acts so change the nature and extent of existing remedies as materially to impair the rights and interests of the owner, they are just as much a violation of the compact as if they overturned his rights and interests."

"One of the tests that a contract has been impaired is, that its value has by legislation been diminished. It is not by the Constitution to be impaired at all. This is not a question of degree or manner or cause, but of encroaching in any respect on its obligation, — dispensing with any part of its force." *Planters' Bank* v. *Sharp et al.*, 6 How. 301.

It is to be understood that the encroachment thus denounced must be material. If it be not material, it will be regarded as of no account.

These rules are axioms in the jurisprudence of this court. We think they rest upon a solid foundation. Do they not cover this case; and are they not decisive of the question before us?

We will, however, further examine the subject.

It is the established law of North Carolina that stay laws are void, because they are in conflict with the national Constitution. *Jacobs* v. *Smallwood*, 63 N. C. 112; *Jones* v. *Crittenden*, 1 Law Repos. (N. C.) 385; *Barnes* v. *Barnes et al.*, 8 Jones (N. C.), L. 366. This ruling is clearly correct. Such laws change a term of the contract by postponing the time of payment. This impairs its obligation, by making it less valuable to the creditor. But it does this solely by operating on the remedy. The contract is not otherwise touched by the offending law. Let us suppose a case. A party recovers two judg-

ments, — one against A., the other against B., — each for the sum of $1,500, upon a promissory note. Each debtor has property worth the amount of the judgment, and no more. The legislature thereafter passes a law declaring that all past and future judgments shall be collected "in four equal annual instalments." At the same time, another law is passed, which exempts from execution the debtor's property to the amount of $1,500. The court holds the former law void and the latter valid. Is not such a result a legal solecism? Can the two judgments be reconciled? One law postpones the remedy, the other destroys it; except in the contingency that the debtor shall acquire more property, — a thing that may not occur, and that cannot occur if he die before the acquisition is made. Both laws involve the same principle and rest on the same basis. They must stand or fall together. The concession that the former is invalid cuts away the foundation from under the latter. If a State may stay the remedy for one fixed period, however short, it may for another, however long. And if it may exempt property to the amount here in question, it may do so to any amount. This, as regards the mode of impairment we are considering, would annul the inhibition of the Constitution, and set at naught the salutary restriction it was intended to impose.

The power to tax involves the power to destroy. *McCulloch* v. *Maryland*, 4 Wheat. 416. The power to modify at discretion the remedial part of a contract is the same thing.

But it is said that imprisonment for debt may be abolished in all cases, and that the time prescribed by a statute of limitations may be abridged.

Imprisonment for debt is a relic of ancient barbarism. Cooper's Justinian, 658; 12 Tables, Tab. 3. It has descended with the stream of time. It is a punishment rather than a remedy. It is right for fraud, but wrong for misfortune. It breaks the spirit of the honest debtor, detroys his credit, which is a form of capital, and dooms him, while it lasts, to helpless idleness. Where there is no fraud, it is the opposite of a remedy. Every right-minded man must rejoice when such a blot is removed from the statute-book.

But upon the power of a State, even in this class of cases,

see the strong dissenting opinion of Mr. Justice Washington, in *Mason* v. *Haile*, 12 Wheat. 370.

Statutes of limitation are statutes of repose. They are necessary to the welfare of society. The lapse of time constantly carries with it the means of proof. The public as well as individuals are interested in the principle upon which they proceed. They do not impair the remedy, but only require its application within the time specified. If the period limited be unreasonably short, and designed to defeat the remedy upon pre-existing contracts, which was part of their obligation, we should pronounce the statute void. Otherwise, we should abdicate the performance of one of our most important duties. The obligation of a contract cannot be substantially impaired in any way by a State law. This restriction is beneficial to those whom it restrains, as well as to others. No community can have any higher public interest than in the faithful performance of contracts and the honest administration of justice. The inhibition of the Constitution is wholly prospective. The States may legislate as to contracts thereafter made, as they may see fit. It is only those in existence when the hostile law is passed that are protected from its effect.

In *Bronson* v. *Kinzie* (1 How. 311), the subject of exemptions was touched upon, but not discussed. There a mortgage had been executed in Illinois. Subsequently, the legislature passed a law giving the mortgagor a year to redeem after sale under a decree, and requiring the land to be appraised, and not to be sold for less than two-thirds of the appraised value. The law was held to be void in both particulars as to pre-existing contracts. What is said as to exemptions is entirely *obiter;* but, coming from so high a source, it is entitled to the most respectful consideration. The court, speaking through Mr. Chief Justice Taney, said: A State "may, if it thinks proper, direct that the necessary implements of agriculture, or the tools of the mechanic, or articles of necessity in household furniture, shall, like wearing-apparel, not be liable to execution on judgments. Regulations of this description have always been considered in every civilized community as properly belonging to the remedy to be executed or not by every sovereignty, according to its own views of policy and humanity." He quotes with approba-

tion the passage which we have quoted from *Green* v. *Biddle*. To guard against possible misconstruction, he is careful to say further: "Whatever belongs merely to the remedy may be altered according to the will of the State, provided the alteration does not impair the obligation of the contract. But, if that effect is produced, it is immaterial whether it is done by acting on the remedy, or directly on the contract itself. In either case, it is prohibited by the Constitution."

The learned Chief Justice seems to have had in his mind the maxim "*de minimis*," &c. Upon no other ground can any exemption be justified. "Policy and humanity" are dangerous guides in the discussion of a legal proposition. He who follows them far is apt to bring back the means of error and delusion. The prohibition contains no qualification, and we have no judicial authority to interpolate any. Our duty is simply to execute it.

Where the facts are undisputed, it is always the duty of the court to pronounce the legal result. *Merchants' Bank* v. *State Bank*, 10 Wall. 604. Here there is no question of legislative discretion involved. With the constitutional prohibition, even as expounded by the late Chief Justice, before us on one hand, and on the other the State Constitution of 1868, and the laws passed to carry out its provisions, we cannot hesitate to hold that both the latter do seriously impair the obligation of the several contracts here in question. We say, as was said in *Gunn* v. *Barry* (15 Wall. 622), that no one can cast his eyes upon the new exemptions thus created without being at once struck with their excessive character, and hence their fatal magnitude. The claim for the retrospective efficacy of the Constitution or the laws cannot be supported. Their validity as to contracts subsequently made admits of no doubt. *Bronson* v. *Kinzie*, *supra*.

The history of the national Constitution throws a strong light upon this subject. Between the close of the war of the revolution and the adoption of that instrument, unprecedented pecuniary distress existed throughout the country.

"The discontents and uneasiness, arising in a great measure from the embarrassment in which a great number of individuals were involved, continued to become more extensive. At length,

two great parties were formed in every State, which were distinctly marked, and which pursued distinct objects with systematic arrangement." 5 Marshall's Life of Washington, 85. One party sought to maintain the inviolability of contracts, the other to impair or destroy them. "The emission of paper money, the delay of legal proceedings, and the suspension of the collection of taxes, were the fruits of the rule of the latter, wherever they were completely dominant." Id. 86.

"The system called justice was, in some of the States, in iquity reduced to elementary principles." . . . "In some of the States, creditors were treated as outlaws. Bankrupts were armed with legal authority to be persecutors, and, by the shock of all confidence, society was shaken to its foundations." Fisher Ames's Works (ed. of 1809), 120.

"Evidences of acknowledged claims on the public would not command in the market more than one-fifth of their nominal value. The bonds of solvent men, payable at no very distant day, could not be negotiated but at a discount of thirty, forty, or fifty per cent per annum. Landed property would rarely command any price; and sales of the most common articles for ready money could only be made at enormous and ruinous depreciation.

"State legislatures, in too many instances, yielded to the necessities of their constituents, and passed laws by which creditors were compelled to wait for the payment of their just demands, on the tender of security, or to take property at a valuation, or paper money falsely purporting to be the representative of specie." 3 Ramsey's Hist. U. S. 77.

"The effects of these laws interfering between debtors and creditors were extensive. They destroyed public credit and confidence between man and man, injured the morals of the people, and in many instances insured and aggravated the ruin of the unfortunate debtors for whose temporary relief they were brought forward." 2 Ramsey's Hist. South Carolina, 429.

Besides the large issues of continental money, nearly all the States issued their own bills of credit. In many instances the amount was very large. Phillips's Historical Sketches of American Paper Currency, 2d Series, 29. The depreciation of both became enormous. Only one per cent of the "continental money" was assumed by the new government. Nothing more

was ever paid upon it. Id. 194. Act of Aug. 4, 1790, sect. 4 (1 Stat. 140). It is needless to trace the history of the emissions by the States.

The treaty of peace with Great Britain declared that "the creditors on either side shall meet with no lawful impediment to the recovery of the full amount in sterling money of all *bona fide* debts heretofore contracted." The British minister complained earnestly to the American Secretary of State of violations of this guaranty. Twenty-two instances of laws in conflict with it in different States were specifically named. 1 Amer. State Papers, pp. 195, 196, 199, and 237. In South Carolina, "laws were passed in which property of every kind was made a legal tender in payment of debts, although payable according to contract in gold and silver. Other laws installed the debt, so that of sums already due only a third, and afterwards only a fifth, was securable in law." 2 Ramsey's Hist. S. C. 429. Many other States passed laws of a similar character. The obligation of the contract was as often invaded after judgment as before. The attacks were quite as common and effective in one way as in the other. To meet these evils in their various phases, the national Constitution declared that "no State should emit bills of credit, make any thing but gold and silver coin a legal tender in payment of debts, or pass any law . . . impairing the obligation of contracts." All these provisions grew out of previous abuses. 2 Curtis's Hist. of the Const. 366. See also the Federalist, Nos. 7 and 44. In the number last mentioned, Mr. Madison said that such laws were not only forbidden by the Constitution, but were "contrary to the first principles of the social compact, and to every principle of sound legislation."

The treatment of the malady was severe, but the cure was complete.

"No sooner did the new government begin its auspicious course than order seemed to arise out of confusion. Commerce and industry awoke, and were cheerful at their labors, for credit and confidence awoke with them. Everywhere was the appearance of prosperity, and the only fear was that its progress was too rapid to consist with the purity and simplicity of ancient manners." Fisher Ames's Works (ed. of 1809), 122.

"Public credit was reanimated. The owners of property and holders of money freely parted with both, well knowing that no future law could impair the obligation of the contract." 2 Ramsey's History of South Carolina, 433.

Mr. Chief Justice Taney, in *Bronson* v. *Kinzie* (*supra*), speaking of the protection of the remedy, said: "It is this protection which the clause of the Constitution now in question mainly intended to secure."

The point decided in *Dartmouth College* v. *Woodward* (1 Wheat. 518) had not, it is believed, when the Constitution was adopted, occurred to any one. There is no trace of it in the Federalist, nor in any other contemporaneous publication. It was first made and judicially decided under the Constitution in that case. Its novelty was admitted by Mr. Chief Justice Marshall, but it was met and conclusively answered in his opinion.

We think the views we have expressed carry out the intent of contracts and the intent of the Constitution. The obligation of the former is placed under the safeguard of the latter. No State can invade it; and Congress is incompetent to authorize such invasion. Its position is impregnable, and will be so while the organic law of the nation remains as it is. The trust touching the subject with which this court is charged is one of magnitude and delicacy. We must always be careful to see that there is neither nonfeasance nor misfeasance on our part.

The importance of the point involved in this controversy induces us to restate succinctly the conclusions at which we have arrived, and which will be the ground of our judgment.

The remedy subsisting in a State when and where a contract is made and is to be performed is a part of its obligation, and any subsequent law of the State which so affects that remedy as substantially to impair and lessen the value of the contract is forbidden by the Constitution, and is, therefore, void.

The judgment of the Supreme Court of North Carolina will be reversed, and the cause will be remanded with directions to proceed in conformity to this opinion; and it is

So ordered.

MR. JUSTICE CLIFFORD and MR. JUSTICE HUNT concurred in the judgment. MR. JUSTICE HARLAN dissented.

MR. JUSTICE CLIFFORD. I concur in the judgment in this case, upon the ground that the State law, passed subsequent to the time when the debt in question was contracted, so changed the nature and extent of the remedy for enforcing the payment of the same as it existed at the time as materially to impair the rights and interests which the complaining party acquired by virtue of the contract merged in the judgment.

Where an appropriate remedy exists for the enforcement of the contract at the time it was made, the State legislature cannot deprive the party of such a remedy, nor can the legislature append to the right such restrictions or conditions as to render its exercise ineffectual or unavailing. State legislatures may change existing remedies, and substitute others in their place; and, if the new remedy is not unreasonable, and will enable the party to enforce his rights without new and burdensome restrictions, the party is bound to pursue the new remedy, the rule being, that a State legislature may regulate at pleasure the modes of proceeding in relation to past contracts as well as those made subsequent to the new regulation.

Examples where the principle is universally accepted may be given to confirm the proposition. Statutes for the abolition of imprisonment for debt are of that character, and so are statutes requiring instruments to be recorded, and statutes of limitation.

All admit that imprisonment for debt may be abolished in respect to past contracts as well as future; and it is equally well settled that the time within which a claim or entry shall be barred may be shortened, without just complaint from any quarter. Statutes of the kind have often been passed; and it has never been held that such an alteration in such a statute impaired the obligation of a prior contract, unless the period allowed in the new law was so short and unreasonable as to amount to a substantial denial of the remedy to enforce the right. Angell, Lim. (6th ed.), sect. 22; *Jackson* v. *Lamphire*, 8 Pet. 280.

Beyond all doubt, a State legislature may regulate all such

proceedings in its courts at pleasure, subject only to the condition that the new regulation shall not in any material respect impair the just rights of any party to a pre-existing contract. Authorities to that effect are numerous and decisive; and it is equally clear that a State legislature may, if it thinks proper, direct that the necessary implements of agriculture, or the tools of the mechanic, or certain articles of universal necessity in household furniture, shall, like wearing-apparel, not be liable to attachment and execution for simple-contract debts. Regulations of the description mentioned have always been considered in every civilized community as properly belonging to the remedy to be exercised or not by every sovereignty, according to its own views of policy and humanity.

Creditors as well as debtors know that the power to adopt such regulations reside in every State, to enable it to secure its citizens from unjust, merciless, and oppressive litigation, and protect those without other means in their pursuits of labor, which are necessary to the well-being and the very existence of every community.

Examples of the kind were well known and universally approved both before and since the Constitution was adopted, and they are now to be found in the statutes of every State and Territory within the boundaries of the United States; and it would be monstrous to hold that every time some small addition was made to such exemptions that the statute making it impairs the obligation of every existing contract within the jurisdiction of the State passing the law.

Mere remedy, it is agreed, may be altered, at the will of the State legislature, if the alteration is not of a character to impair the obligation of the contract; and it is properly conceded that the alteration, though it be of the remedy, if it materially impairs the right of the party to enforce the contract, is equally within the constitutional inhibition. Difficulty would doubtless attend the effort to draw a line that would be applicable in all cases between legitimate alteration of the remedy, and provisions which, in the form of remedy, impair the right; nor is it necessary to make the attempt in this case, as the courts of all nations agree, and every civilized community will concede, that laws exempting necessary wearing-

apparel, the implements of agriculture owned by the tiller of the soil, the tools of the mechanic, and certain articles or utensils of a household character, universally recognized as articles or utensils of necessity, are as much within the competency of a State legislature as laws regulating the limitation of actions, or laws abolishing imprisonment for debt. *Bronson* v. *Kinzie*, 1 How. 311.

Expressions are contained in the opinion of the court which may be construed as forbidding all such humane legislation, and it is to exclude the conclusion that any such views have my concurrence that I have found it necessary to state the reasons which induced me to reverse the judgment of the State court.

MR. JUSTICE HUNT. I concur in the judgment in this case, for the reasons following: —

By the Constitution of North Carolina of 1868, the personal property of any resident of the State, to the value of $500, is exempt from sale under execution; also, a homestead, the dwelling and buildings thereon, not exceeding in value $1,000.

The debts in question were incurred before the exemptions took effect. The court now holds that the exemptions are invalid. In this I concur, not for the reason that any and every exemption made after entering into a contract is invalid, but that the amount here exempted is so large, as seriously to impair the creditor's remedy for the collection of his debt.

I think that the law was correctly announced by Mr. Chief Justice Taney in *Bronson* v. *Kinzie* (1 How. 311), when he said: A State "may, if it thinks proper, direct that the necessary implements of agriculture, or the tools of a mechanic, or articles of necessity in household furniture, shall, like wearing-apparel, be not liable to execution on judgments."

The principle was laid down with the like accuracy by Judge Denio, in *Morse* v. *Goold* (11 N. Y. 281), where he says: "There is no universal principle of law that every part of the property of a debtor is liable to be seized for the payment of a judgment against him. . . . The question is, whether the law which prevailed when the contract was made has been so far changed that there does not remain a substantial and reasonable mode

of enforcing it in the ordinary and regular course of justice. Taking the mass of contracts and the situation and circumstances of debtors as they are ordinarily found to exist, no one could probably say that exempting the team and household furniture of a householder to the amount of $150 from levy or execution would directly affect the efficiency of remedies for the collection of debts." Mr. Justice Woodbury lays down the same rule in *Planters' Bank* v. *Sharp et al.*, 6 How. 301.

In my judgment, the exemption provided for by the North Carolina Constitution is so large, that, in regard to the mass of contracts and the situation and circumstances of debtors as they are ordinarily found to exist, it would seriously affect the efficiency of remedies for the collection of debts, and that it must, therefore, be held to be void.

HAYWARD v. NATIONAL BANK.

A. borrowed of a bank money on call, and deposited with it as collateral security certain mining stocks, with written authority to sell them at its discretion. The loan remaining unpaid, the bank notified him that, unless he paid it, the stocks would be sold. He failed, after repeated demands, to pay it, and they were sold, for more than their market value, to three directors of the bank, and the proceeds applied to the payment of the loan. A., who was advised of the sale, and that enough had been realized to pay his indebtedness, made no objection. The stocks were transferred to the purchasers. Nearly four years after the sale, the stocks having in the mean time greatly increased in value, A. notified the bank of his desire and purpose to redeem them, and subsequently filed his bill against it asserting his right so to redeem, and praying for general relief. *Held*, that he is entitled to no relief.

APPEAL from the Circuit Court of the United States for the District of Massachusetts.

In the year 1863, Hayward, "for the purpose of opening a credit with the Eliot Bank," deposited certain securities with it, giving it power to transfer the same, as well as any bullion, coin, or other securities which he might thereafter deposit, and expressly waiving "all and every objection to the manner in which said securities may be sold, whether at public or private sale, or at the board of brokers, without any demand or notice

whatever." Subsequently, the bank was converted into a national banking association, under the name of the Eliot National Bank; and, in the latter capacity, loaned, in October, 1866, to Hayward, first $6,500, and then $20,000, receiving in pledge, as security, four hundred and fifty shares of stock in the Hecla Mining Company, incorporated under the laws of Michigan, but having an office in the city of Boston. The loans were merely temporary, and were entered upon the demand-loan account of the bank. In order that the bank might have full control of the stock so pledged, Hayward caused it to be transferred to R. B. Conant, to whom, as cashier, certificates, absolute in form, were issued for the whole four hundred and fifty shares. Hayward did not meet the loans as he had agreed, but made provision for the interest up to April 1, 1867. After that date he paid no interest. During that year, various assessments were made by the company upon its stock. He was notified of and requested to meet them, but failed to do so; and the bank, in order to save the security, and for its own indemnity, was compelled to pay them, amounting in the aggregate to $9,972.15.

On the 9th of November, 1867, Hayward executed and delivered to the bank the following paper: —

"BOSTON, Nov. 9, 1867.

"I hereby authorize the president and directors of the Eliot National Bank to sell, at their discretion, four hundred and fifty shares of stock of the Hecla Mining Company, held as collateral security for loan; proceeds of sale to be applied upon said loan.

"To the President and Directors of the Eliot Bank."

"CHAS. L. HAYWARD."

This paper was obtained because doubts were entertained whether the power of attorney given in 1863, when the bank was a State institution, was sufficient to authorize a sale of the stock by the national bank to pay Hayward's indebtedness to it.

After the transfer in October, 1866, the stock was at times greatly depressed in value, ranging from $15 to $70 per share. The latter was the ruling market price in August, 1868; but it was insufficient to reimburse the bank for its loan and interest, and the assessments on stock it had paid. The board of

directors, on the 18th of the latter month, passed an order directing the president of the bank to sell forthwith the Hecla mining stock, so held as collateral, unless Hayward paid upon his said loans $5,000 during that week, and a like amount during the following week. Hayward was notified of this order, but did not comply with its terms. Thereupon the president determined to dispose of the stock, in discharge of the bank's claim. Three of the directors, for the purpose, as the bank officers say, of preventing loss to the bank, in which they were stockholders, but for the further reason, doubtless, that they regarded it a safe investment, proposed to the bank to take the stock at $87 per share, which was above the market price, each director to take one hundred and fifty shares, and pay one-third of Hayward's indebtedness to the bank. But, before they would carry this arrangement into effect, they insisted that Hayward be advised of their proposition. The sale was consummated on the 8th of September, 1868; and on that day each of the directors paid, by assuming absolutely, one-third of the bank's claim against Hayward, and received in consideration thereof a new certificate for one hundred and fifty shares of stock.

Immediately after this sale, the bank sent to Hayward a statement of his account, showing its claim against him on account of his loans, interest, and assessments paid, to be $39,257.16, and closing with this credit: "Sept. 8, 1868, by cash, $39,257.16."

In 1871, the Hecla Mining Company and the Calumet Mining Company, also a Michigan corporation, were consolidated under the name of the Calumet and Hecla Mining Company. New stock was issued from time to time; and at the commencement of this action, instead of the four hundred and fifty shares originally held, the three directors held nine hundred shares in the consolidated company. After the transfer of Sept. 8, 1868, they met all assessments upon the stock, and received individually such dividends as were declared thereon.

Other facts are stated in the opinion of the court.

This suit was instituted by Hayward against the bank, on the 14th of March, 1872, for the purpose of obtaining a decree, authorizing him to redeem the nine hundred shares of stock, and requiring the bank to transfer them to him, and to pay

over whatever might be due him, upon taking an account of the moneys received on the stock, and of his indebtedness to the bank by reason of said loans.

Neither the mining company nor the directors who purchased the stock were made defendants.

The bill was dismissed on a final hearing, and Hayward appealed to this court.

Mr. E. F. Hodges and *Mr. Jonathan F. Barrett* for the appellant.

Mr. A. A. Ranney, contra.

MR. JUSTICE HARLAN delivered the opinion of the court.

This bill seems to have been prepared upon the supposition that the bank held and owned the nine hundred shares of stock in the Calumet and Hecla Mining Company at the commencement of this action. It is evident, however, that the bank's connection with the stock ceased Sept. 8, 1868, when it was sold to three of the bank directors. After that date, the purchasers claimed and controlled the stock as their individual property, paid all assessments laid, and received all dividends declared. The evidence shows that the sale to them was absolute and unconditional; and the title which then unquestionably passed to them has ever since been uniformly recognized by the bank and the company. If the appellant is entitled, upon any ground whatever, to a transfer of the stock, such relief can only be given in a suit against the holders of it.

A large portion of the very elaborate argument made in behalf of the appellant was in support of the proposition that the bank, having received the stock in pledge to secure his indebtedness to it, could not, consistently with settled principles, buy from itself, and consequently could not sell to its directors. If these principles were at all applicable to this case, it would only follow that the bank, by violating its duty, had become liable to him for the value of the stock. But such liability is not charged, nor is such relief asked. The specific relief sought is a decree requiring the bank to transfer the stock to him,—a thing now beyond its power to do. It is true that the bill contains a general prayer for such relief as may be consistent with equity and good conscience; but we incline to the opinion that

its whole frame and structure are inconsistent with a right in this suit to a decree for the value of the stock, even if the facts justified any such relief. 1 Dan. Ch. Pr. (3d Am. ed.) 382; *Chalmers et ux.* v. *Chambers*, 6 Har. & J. (Md.) 29; *Hobson* v. *McArthur*, 16 Pet. 182; *English* v. *Foxall*, 2 id. 595; *Thomason* v. *Smithson*, 7 Port. (Ala.) 144; *Driver* v. *Fortner*, 5 id. 9; *Strange* v. *Watson*, 11 Ala. 324.

But, waiving the consideration last mentioned, we discover nothing in the evidence which would entitle Hayward to a decree against the bank in any form of proceeding. The bank had the unquestionable right to sell the stock in satisfaction of his indebtedness. It is equally clear, that, with his assent, the stock could have been taken by the bank in discharge of such indebtedness, or sold to any of its directors. Where such assent is clearly shown, and the sale to them was unattended by circumstances of fraud, unfairness, or imposition, we perceive no sound reason why it should not be upheld, especially after an unreasonable and unexplained lapse of time, without objection or complaint by him. Prior to the sale, he was often requested by the bank to take up his notes, and meet the assessments upon the stock. He failed to do either, and the bank was compelled to provide for the assessments. The indulgence extended to him by the bank was characterized by the utmost liberality. It was all that he could have expected or demanded. When, therefore, he was informed (as we do not doubt he was) of the settled purpose of the bank to sell the stock, and of the proposition of the three directors to purchase it, it was his duty, if he disapproved of the latter arrangement, to give expression, in some form, to that disapproval. So far from expressing disapproval, the weight of the evidence is that he gave his consent. It is quite certain that the directors made the purchase in the belief that he had been advised of their proposition, and had assented to its acceptance by the bank. The most favorable construction for him which can be put upon the evidence is, that he was silent when notified of the proposition, and made no objection to its acceptance. His silence, however, under the circumstances, taken in connection with his subsequent conduct, should be held as conclusive as if he had originally assented, in express terms, to the sale. If it be suggested that, after having

been informed of the proposition of the directors, sufficient time was not allowed him for deliberation before the sale was made, and if he could have repudiated it for that reason, and reclaimed the stock, there is still no satisfactory explanation of his course after he learned that a sale had actually occurred. He was promptly advised of it, and of the amount realized therefrom. He received, at the same time, an itemized account, showing the amount claimed by the bank upon the original loans, as well as for interest and for advances to meet assessments. That account, it is true, contained no statement, in terms, of the sale, nor did it give the names of the purchasers. But he admits, in his cross-examination, that he was informed by the person who delivered the account that the stock had been sold, and that he understood the credit of $39,257.16 to denote the sum realized from such sale. There was no other mode, as he well knew, by which he could become entitled to so large a credit. He disputed no item in the account, expressed no disapproval of what had been done, and made no complaint to the bank of its action. Although he was well acquainted with the bank officers, and met them frequently after the sale, often upon terms of familiar intercourse, he made no inquiry on the subject. He gave no intimation either of dissatisfaction or of any purpose to repudiate the sale and look to the bank for the value of the stock. He says that he felt "too castaway to speak to anybody; . . . couldn't help himself, nor pay the loan; cared very little about any thing." If, as soon as he was notified of the sale, he had the right to repudiate it, and compel the bank to recover the stock, such a course would have profited him nothing, since the three directors paid more for the stock than it was then worth; and the bank, under its express authority to sell, could have put it at once upon the market. It was this consideration which perhaps induced him to remain silent and inactive for more than three years and a half. During all that period he neither paid, nor offered to pay, any interest to the bank, although his present suit rests upon the basis that the bank had an unsettled account with him, embracing a valid subsisting debt, upon which, he now concedes, it is entitled to interest; and he permitted the bank and the purchasing directors to act in the belief that he was content with their action.

and that the money realized from the sale had been properly applied to the payment of his indebtedness. Although all the time conversant with the market value of such stock, he made no demand upon the company for dividends declared, nor did he protest against the payment of them to others. Finally, the extraordinary advance in the market price of the stock caused him to break the silence which he had so long and so persistently maintained, and, in March, 1872, he formally notified the bank of his desire and purpose to redeem the stock, although he knew, or could have ascertained upon inquiry, either at the bank or at the office of the company in Boston, that the bank had not held or controlled the stock in any form, directly or indirectly, after the sale in September, 1868.

The facts present insuperable obstacles to any decree in favor of the appellant. If the sale made by the bank was originally impeachable by him, the right to question its validity was lost by his acquiescence. He was in a condition, immediately after the sale, to enforce such rights as the law gave him, as he was fully apprised of their nature, and of all the material facts of the case. He now claims that the sale was in derogation of his rights and injurious to his interests; and yet his conduct was uniformly inconsistent with any purpose to repudiate the sale or assert ownership of the stock. His course was continuously such as to induce a reasonable belief of his fixed determination to abide by the action of the bank. He remained silent when he should have spoken. He will not be heard now, when he should be silent. He must be held to have waived and abandoned the right, if any he had, to impeach the transaction of Sept. 8, 1868.

But the appellant is equally concluded by the lapse of time during which that transaction has been allowed to stand, without any effort upon his part to impeach it. It must now be regarded as unimpeachable.

Courts of equity often treat a lapse of time, less than that prescribed by the Statute of Limitations, as a presumptive bar, on the ground "of discouraging stale claims, or gross laches, or unexplained acquiescence in the assertion of an adverse right." 2 Story, Eq. Jur., sect. 1520. In *Smith* v. *Clay* (Amb. 645), Lord Camden said: "A court of equity, which is never active

in relief against conscience or public convenience, has always refused its aid to stale demands, when the party has slept upon his right, and acquiesced for a great length of time. Nothing can call forth this court into activity but conscience, good faith, and reasonable diligence. When these are wanting, the court is passive, and does nothing. Laches and neglect are always discountenanced." These doctrines have received the approval of this court in numerous cases. *Twin Lick Oil Co.* v. *Marbury*, 91 U. S. 587; *Badger* v. *Badger*, 2 Wall. 87; *Marsh* v. *Whitmore*, 21 id. 178; *Harwood* v. *Railroad Company*, 17 id. 79. In the last-named case, this court said, that, without reference tc any statute of limitation, equity has adopted the principle that the delay which will defeat a recovery must depend upon the particular circumstances of each case. The question of acquiescence or delay may often be controlled by the nature of the property which is the subject of litigation. "A delay which might have been of no consequence in an ordinary case, may be amply sufficient to bar relief when the property is of a speculative character, or is subject to contingencies, or where the rights and liabilities of others have been in the mean time varied. If the property is of a speculative or precarious nature, it is the duty of a man complaining of fraud to put forward his complaint at the earliest possible time. He cannot be allowed to remain passive, prepared to affirm the transaction if the concern should prosper, or to repudiate it if that should prove to his advantage." Kerr, Mistake and Fraud (Bump's ed.), pp. 302, 306; *Twin Lick Oil Co.* v. *Marbury*, *supra*.

If Hayward was defrauded of his stock,—if the title did not pass from him or the bank because of the peculiar relations which the purchasers held to him and the property; if he had the right originally upon any ground to repudiate the sale and reclaim the stock,—it was incumbent upon him, by every consideration of fairness, to act with diligence, and before any material change in the circumstances and in the value of the stock had intervened. No sufficient reason is given for the delay in suing. His poverty or pecuniary embarrassment was not a sufficient excuse for postponing the assertion of his rights. He must be deemed to have made a final election not to disturb the sale of 1868; and a court of equity should not permit him.

under the circumstances, to recall that election. Upon the grounds, then, both of acquiescence and lapse of time, he should be held to have forfeited all right to relief in a court of equity.

For the reasons given, and without discussing other questions of minor importance, the decree should be affirmed; and it is

So ordered.

GREGORY v. MORRIS.

1. The rule of the common law, that the lien of the vendor of personal property, to secure the payment of purchase-money, is lost by the voluntary and unconditional delivery of the property to the purchaser, does not prevent the parties from contracting for a lien which, as between themselves, will be good after delivery.
2. Where a party entitled to recover a certain amount in gold coin takes, with the approbation of the court, a judgment which may be discharged in currency, the judgment should be for a sum equivalent in value to the specified amount of that coin as bullion.
3. Where the record does not show that the finding of the jury is contrary to the instruction of the court, the presumption is that they followed it.
4. Where a witness testifies, in his direct examination, to a purchase made by him, it is competent, on cross-examination, to ask him whether his contract was in writing; and, if it was, to identify the paper.

ERROR to the Supreme Court of Wyoming Territory.

On Feb. 26, 1873, W. A. Morris and A. J. Gregory executed a written contract at Austin, Texas, for the sale to the latter, in accordance with a schedule of prices in gold, of a large number of cattle. The contract provided that Morris was to retain a lien on the cattle until the purchase-money, amounting to nearly $8,000, should be paid; and it, for the purpose of preserving said lien, authorized him to designate some person as his agent to go along with and retain possession of the cattle. In the event of the balance of the purchase-money not being paid on or before Oct. 1 following, such agent was to sell all or such portion of the cattle as would pay the purchase-money then due, as well as the wages and other expenses of the agent. After the contract was signed, Morris executed to one Poteet a power of attorney, authorizing him

to accompany the cattle, and retain the lien provided for. The cattle arrived on the Laramie Plains some time in September. Oct. 4, the purchase-money not having been paid by Gregory, Poteet took forcible possession of the cattle, and drove them from the ranche where they were grazing to that of one Alsop, some distance off. Gregory then brought replevin against Morris and Poteet to recover possession of the cattle, and damages for their wrongful detention.

The defendants, in their answer, denied all the allegations of the petition, and specially that they wrongfully detained the cattle. At the trial, the plaintiff having introduced evidence tending to prove possession and ownership, the value of the cattle, the taking and detention of them, and his demand for their return, the defendants offered the written contract and other documentary evidence, which offer was objected to by the plaintiff, and the objection sustained. The defendants, having by leave amended their answer, were permitted to introduce the special matter which, under their original answer, had been excluded by the court. The plaintiff thereupon excepted. Upon the close of the testimony, the court gave certain instructions to the jury, which were excepted to at the time by the plaintiff, and are set out in the assignments of error.

The court, without objection, charged the jury, that, "there being no question of title to the cattle put in issue by the pleadings, but of possession only, if you find for the defendants, you will find 'that they had the right of possession,' and will assess such damages as they have sustained by reason of being deprived of that possession, and the opportunity of selling the cattle according to the contract."

The plaintiff prayed for certain instructions, which were refused by the court. They are stated in the seventh assignment of error.

The jury found for the defendants, and assessed their damages $7,454.90. A motion by the plaintiff for a new trial having been overruled, and judgment rendered, which was affirmed by the Supreme Court of the Territory, he sued out this writ, and here assigns for error that said Supreme Court erred, —

1. In sustaining the ruling of the District Court in instruct-

ing the jury as follows, to wit, "The jury must compute the damages, and return their verdict on that computation in dollars and cents; and, if the jury find the contract on the part of the plaintiff was to pay a certain sum of money in gold, they will compute the difference between gold and currency, and render their verdict in dollars and cents in currency."

2. In sustaining the ruling of said District Court in giving to the jury the following instruction: "That the written contract between Morris and Gregory, in connection with the bill of sale, the receipt, and the power of attorney to Poteet, necessarily explain and define the rights and interests of the parties to this action in the property in question."

3. In sustaining the ruling of said District Court in giving to the jury the following instruction: "That by and under those papers the defendants had a legal right to take possession of the cattle in question on or after the first day of October last, and retain such possession, for the purpose of selling them, according to the terms of said contract."

4. In sustaining the ruling of said District Court in giving to the jury the following instruction: "That if the jury find that Poteet, in pursuance of his power of attorney, took possession of said cattle, and removed them to Alsop's ranche for the purpose of selling them, according to the terms of said contract, then they must find the right of possession in the defendants at the commencement of this action, and must assess such damages for the defendants as are just and proper."

5. In sustaining the ruling of said District Court in giving to the jury the following instruction: "That the pleadings in this case put in issue only the right of possession at the time of the service of the writ of replevin, and you are instructed that the right of the plaintiff in these cattle at that time was only a right of redemption as a mortgagor after condition broken; and that he had no right to the possession of the cattle, and no right to take them, by replevin or otherwise, from these defendants, or either of them, until he had paid or tendered the amount due on the contract."

6. In sustaining the ruling of said District Court in giving to the jury the following instruction: "If the jury find that by the terms of the written contract, which must govern in this

case, that the defendants, on the first day of October, 1873, had a right to sell these cattle, the right to sell necessarily carries with it the right of possession."

7. In sustaining the ruling of the said District Court in refusing to give to the jury the following instructions: "If the vendor, Morris, made an agreement of sale and delivery, and, in conformity therewith, did sell and deliver cattle to Gregory, the vendee, and by the terms of the agreement made between the parties the vendor was to have and maintain a lien upon the chattels, or cattle, for the balance of the purchase price, by keeping the said cattle in the possession of the vendor during the journey from Texas to Wyoming, until the first day of October, 1873, the vendee, Gregory, after receiving the cattle from Morris, must have first redelivered the said cattle to Morris, and placed them in his hands as a pledge before the agreed lien of Morris for balance of purchase price could vest; and, second, if such redelivery was made by Gregory, the vendee, to Morris, the vendor, and thereafter the vendor, Morris, by himself or his agents, by his own fault, carelessness, or negligence, permitted the possession of the said cattle to again pass to Gregory, the vendee, Morris, the vendor, thereby lost his lien, and all right of possession and right of property, and possession must thereafter rest and remain in Gregory."

8. In sustaining the ruling of the District Court in overruling the motion of the plaintiff to set aside the verdict of the jury, for the reason that it was not in due form.

9. In sustaining the action of said District Court in rendering judgment upon the verdict, the said verdict not being in the form required by law, nor in such form that any lawful judgment could be rendered thereon.

10. In sustaining the ruling of said District Court in overruling the plaintiff's motion to set aside the verdict of the jury and to grant a new trial.

11. In sustaining the action and ruling of the District Court in admitting in evidence, over the objection of the plaintiff, written instruments, the execution of the same not having been proved.

Mr. W. W. Corlett for the plaintiff in error.

Mr. J. M. Wilson, contra.

MR. CHIEF JUSTICE WAITE delivered the opinion of the court.

The second, third, fourth, fifth, sixth, seventh, and tenth assignments of error may be considered together. They relate entirely to the construction and effect given the contract between Gregory and Morris, as shown by the several instruments in writing put in evidence. There was no real controversy as to the facts; but Gregory claimed that he was the purchaser of the cattle in dispute from Morris, and that the lien provided for in favor of Morris was one which a delivery of the property under the contract extinguished. There was no pretence of payment on his part further than that shown by the contract itself, or of title, except such as was acquired through this purchase.

The lien at common law of the vendor of personal property to secure the payment of purchase-money is lost by the voluntary and unconditional delivery of the property to the purchaser; but this does not prevent the parties from contracting for a lien which, as between themselves, will be good after delivery. So, ordinarily, when the possession of a pledge is relinquished, the rights of the pledgee are gone. In this case, however, Morris was not willing to rely upon the lien which the law gave him as vendor, or upon a mere pledge of the property, but required a special contract on the part of Gregory, securing his rights. This contract created a charge upon the property, not in the nature of a pledge, but of a mortgage. The lien, as between the parties, was not made to depend upon possession, but upon a contract, which defined the rights both of Morris and Gregory, and the power of Morris for the enforcement of his security. When Poteet assumed the exclusive possession of the property, no rights of third persons had intervened, and there was nothing to prevent the execution of the agreement according to its terms. This clearly gave Morris the right, after Oct. 1, if the purchase-money was not paid, to take the cattle into his own possession, detain them until the balance due him was discharged, and sell them if necessary to obtain his money. We think the court defined correctly the rights of the parties, and that there was no error in this particular, either in the charge or the refusal to charge.

The first assignment of error brings up for consideration the rule of damages laid down by the court. By the laws of Wyoming Territory, property taken in replevin is delivered to the plaintiff upon his entering into an undertaking to the defendant, with one or more sufficient sureties in at least double the value of the property taken, to the effect that the plaintiff shall duly prosecute his action, and pay all costs and damages which may be awarded against him. Civil Code, 1869, sect. 190. If the property is so delivered, and the jury find for the defendant upon the issues joined, they are also required to find "whether the defendant has the right of property or the right of possession only; . . . and if they find either in his favor, they shall assess such damages as they think right and proper for the defendant; for which, with costs of suit, the court shall render judgment for the defendant." Sect. 195. The delivery of the property to the plaintiff passes the title to him as against the defendant, who must look for his protection to a recovery in damages, if the writ is wrongfully sued out.

In this case, the finding for the defendant is, under the pleadings, in effect, that Morris was the mortgagee of the property in possession after condition broken, and that Gregory had by the replevin wrongfully deprived him of his possession. That rendered Gregory liable for such damages, in consequence of his wrongful act, as were "right and proper" under the circumstances. The obligation secured by the mortgage or lien under which Morris held was for the payment of gold coin, or, as was said in *Bronson* v. *Rodes* (7 Wall. 229), "an agreement to deliver a certain weight of standard gold, to be ascertained by a count of coins, each of which is certified to contain a definite proportion of that weight," and is not distinguishable "from a contract to deliver an equal weight of bullion of equal fineness." In that case, it was held that judgment might be rendered upon such a contract payable in coined dollars; but here the suit is not upon the contract for the recovery of the amount agreed to be paid, but, in effect, for damages on account of the wrongful detention of property mortgaged to secure the debt. Gregory himself asked the court to charge that "the jury must compute damages and return their verdict in dollars and cents." This was undoubtedly correct, and it was done;

but he further asked the court to say that "no agreement or contract to pay a certain number of dollars in gold can be enforced. The national currency is by law a legal tender at its face value for all debts and demands, public or private, except duties on imports and interest on the public debt." This was in conflict with *Bronson* v. *Rodes*, and therefore properly refused.

But the court did say to the jury, that, if they found the contract on the part of the plaintiff was to pay a certain sum of money in gold, they should compute the difference between gold and currency, and render their verdict in dollars and cents in currency; and in this we see no error. While we have decided that a judgment upon a contract payable in gold may be for payment in coined dollars, we have never held that in all cases it must be so. While gold coin is in one sense money, it is in another an article of merchandise. Gregory was required to discharge his debt in gold before he could rightfully take the property into his possession under the replevin. If the payment had been so made, Morris would have had his coin at that time to use as money or merchandise, according to his discretion. But it was not made; and Gregory, by his wrongful act in taking the property, subjected himself to damages. If the contract had been in terms for the delivery of so much gold bullion, there is no doubt but the court might have directed the jury to find the value of the bullion in currency, and bring in a verdict accordingly. But we think, as was thought in *Bronson* v. *Rodes*, such a case is not really distinguishable from this. The question is not whether Gregory had the right to pay in gold dollars after his debt had become due, but whether, having wrongfully got the property into his possession without payment at all, the damages he is required to pay on account of this wrongful act must, as a matter of law, be estimated in gold, or whether they may be in currency. We think it clear, that, under such circumstances, it was within the power of the court, so far as Gregory was concerned, to treat the contract as one for the delivery of so much gold bullion; and, if Morris was willing to accept a judgment which might be discharged in currency, to have his damages estimated according to the currency value of bullion. Certainly, if Morris

had in good faith sold the cattle under his power of sale for currency, and received payment in that kind of money, he would have been entitled to convert the currency into gold before crediting it upon his debt. So here, if, with the approbation of the court, he takes a judgment that may be discharged in currency, the judgment should be for an amount which would be the equivalent in currency of the specified amount of coin as bullion. This was the rule adopted by the court, and we think it correct.

The eighth and ninth assignments of error relate to the form of the verdict. As has already been seen, where the property has been delivered to the plaintiff, the jury, if they find for the defendant, must also find whether the defendant has "the right of property or the right of possession only." In this case the verdict, though for the defendant, is silent upon that point; but the record shows that by consent the court charged the jury if they found for the defendants they should find "that they had the right of possession only." This cures any defect there may have been in the verdict in this particular. The whole record must be taken together; and, as the jury did not find to the contrary of the instruction, the presumption is that they followed it.

All the other assignments relate to the admissibility of evidence, and as to them it is sufficient to say we are satisfied with the rulings that were made. Certainly, the instruments in writing which were objected to were admissible. They tended directly to prove the defence set up in the amended answer, and no objection appears to have been made at the trial as to the proof of their execution. The cross-examination of Gregory, which was objected to, was clearly legitimate, under the most stringent rules governing that subject. He had testified that he had purchased the cattle from Morris. It was clearly proper, therefore, on cross-examination, to ask him if his contract of purchase was in writing, and, if so, to identify the paper.

Judgment affirmed.

BRINE v. INSURANCE COMPANY.

1. The laws of the State in which land is situated control exclusively its descent, alienation, and transfer, and the effect and construction of instruments intended to convey it.
2. All such laws in existence when a contract in regard to real estate is made, including the contract of mortgage, enter into and become a part of such contract.
3. A State statute, therefore, which allows to the mortgagor twelve months to redeem, after a sale under a decree of foreclosure, and to his judgment creditor three months after that, governs to that extent the mode of transferring the title, and confers a substantial right, and thereby becomes a rule of property.
4. This right of redemption after sale is, therefore, as obligatory on the Federal courts sitting in equity, as on the State courts; and their rules of practice must be made to conform to the law of the State, so far as may be necessary to give full effect to the right.

APPEAL from the Circuit Court of the United States for the Northern District of Illinois.

This suit began by a bill in chancery, filed in the Circuit Court of the United States for the Northern District of Illinois, by the Hartford Fire Insurance Company, to foreclose a mortgage, in the form of a deed of trust, on a lot in Chicago. The deed was signed by Bartalott and Barbier, and their wives, and conveyed the lot to Benjamin E. Gallup, in trust to secure the payment of $7,000, loaned to them by the company, and the interest thereon as it fell due. The lot, the title whereto was in the grantors when that deed was made, was afterwards sold and conveyed by them to Samuel J. Walker. Walker sold, but did not convey, to Ida R. Brine, who, dying, left as her sole heir Ida Winter Brine.

Walker, after his sale to Ida R. Brine, — which was evidenced by a written instrument, — conveyed the lot to J. Irving Pearce, in order that the sum of $6,000, which she owed him on the contract of purchase, might be held by Pearce as security for a debt of Walker to the Third National Bank of Chicago. All the parties interested in the lot were made defendants, except the bank, whose interest was represented by Pearce.

A final decree was made, which ascertained the sum due on the mortgage, and allowed defendants one hundred days to pay

it. If not paid within that time, the special master was ordered to sell the land for cash, making such sale in accordance with the course and practice of the court; and, after retaining his commissions, and paying the costs of the proceedings, deposit the remainder with the clerk, together with his report of sale, to abide the further order of the court.

From this decree Ida Winter Brine appeals.

The statute of Illinois bearing on the case is set out, and the assignment of errors mentioned in the opinion of the court.

Mr. Melville W. Fuller for the appellant.

As the mortgage or deed of trust conveyed land in Illinois, the right which the appellee acquired thereby depends upon the laws of that State in force at the time it was made. They created and defined the legal and equitable obligations of the contract which is sought to be enforced as fully as if they had been incorporated in it. A foreclosure, therefore, by suit, instituted in either the Federal or the State court, must be in accordance with them, so far as that right is involved. *Bronson* v. *Kinzie*, 1 How. 311; *McCracken* v. *Hayward*, 2 id. 608; *Gantly's Lessee* v. *Ewing*, 3 id. 707; *Von Hoffman* v. *Quincy*, 4 Wall. 535; *Clark* v. *Reyburn*, 8 id. 318; *McGoon* v. *Scales*, 9 id. 23; *Doe* v. *Heath*, 7 Blackf. (Ind.) 154; *Sheets* v. *Peabody*, id. 613; *Franklin* v. *Thurston*, 8 id. 160; *Cargill* v. *Power*, 1 Mich. 369; *Malony* v. *Fortune*, 14 Iowa, 417; *Scobey* v. *Gibson*, 17 Ind. 572; *Bixby* v. *Bailey*, 11 Kan. 359; *Carroll* v. *Rossiter*, 10 Minn. 174; Wharton, Conflict of Laws, 273, 274. Their effect is to vest in the mortgagor, or his grantee of the equity of redemption, a new estate, to continue fifteen months after the sale under a decree of foreclosure. *Farrell, &c. et al.* v. *Parlier*, 50 Ill. 274; *D'Wolf et al.* v. *Hadyn*, 24 id. 525; *Campbell* v. *Vining*, 23 id. 525.

The decree in question directs the master to sell, in pursuance of the course and practice of the court, by which for years mortgaged lands have been sold, by the marshal, without reserving after the sale any right of redemption, and of which this court will take judicial notice. *Oliver* v. *Palmer & Hamilton*, 11 Gill & J. (Md.) 426; *Contee* v. *Pratt*, 9 Md. 67; *Newell* v. *Newton*, 10 Pick. (Mass.) 470; *March* v. *Commonwealth*, 12 B. Mon. (Ky.) 25; *Chitty* v. *Dendy*, 3 Ad. & E.

319; *United States* v. *Teschmaker et al.*, 22 How. 392; *Romero* v. *United States*, 1 Wall. 721; 1 Greenl. Evid., sects. 6 and 6 *a*.

The right of redemption is a substantial one. At sheriff's sale, under the statute, the purchaser obtains a certificate which entitles him only to a deed in fifteen months therefrom, provided no redemption is made; whereas, by a sale under this decree, that right is defeated, inasmuch as he acquires a present estate in the land, and the right of immediate entry thereon, not depending upon any subsequent contingency. *Phillips* v. *Demoss et al.*, 14 Ill. 410; *Karnes* v. *Lloyd et al.*, 52 id. 113; *Martin* v. *Judd*, 60 id. 78.

The statute securing this right of redemption is a binding rule of property, and, when not in conflict with the Constitution, the treaties, or the laws of the United States, should be administered by the Federal as well as by the State courts. *Bronson* v. *Kinzie*, *supra*; *Clark* v. *Smith*, 13 Pet. 195; *Meade* v. *Beale*, Taney, Dec. 339; *Green* v. *Neal's Lessee*, 6 Pet. 291; *Shipp* v. *Millen's Heirs*, 2 Wheat. 316; *Thacher* v. *Powell*, 6 id. 119; *Parker* v. *Overman*, 18 How. 137; *Fitch* v. *Creighton*, 24 id. 159; *Lorman et al.* v. *Clark*, 2 McLean, 568.

Mr. Edward S. Isham, contra.

The statute of Illinois, invoked by the appellant, regulates the process of her courts in foreclosure cases. Having been passed in 1841, it could not have been adopted by the act of Congress of 1828 as a rule for the Federal courts. Counsel for the appellant admits that it was never adopted by the court below, or here. It has, therefore, no application to the present suit, and no error was committed by disregarding it, and adhering to the precedents of the Chancery Court of England, and to the rules of practice and procedure prescribed by Congress and the Supreme Court, or adopted by the court below. Const. U. S., art. 3, sects. 1, 2; Temporary Process Act of Sept. 24, 1789; Judiciary Act of Sept. 24, 1789, sects. 2–4; Process Act of May 8, 1792, sect. 2; Process Act of May 19, 1828, sects. 1, 3 (4 Stat. 278); Act of Aug. 23, 1842 (5 id. 516); Act of June 1, 1872, sects. 5, 6 (17 id. 197); U. S. Rev. Stat., sects. 913 to 916 inclusive; Equity Rules Supreme Court, Nos. 89, 90; *Robinson* v. *Campbell*, 3 Wheat. 212; *Sturges* v. *Crowninshield*, 4 id. 122; *Wayman* v. *Southard*, 10 id. 1; *Bank of*

the United States v. *Halsted*, id. 51; *Bank of Hamilton* v. *Dudley's Lessee*, 2 Pet. 492; *Boyle* v. *Zacharie*, 6 id. 348; *Ross* v. *Duval*, 13 id. 45; *Williams* v. *Waldo et al.*, 3 Scam. (Ill.) 264; *Bronson* v. *Kinzie*, 1 How. 311; *McCracken* v. *Hayward*, 2 id. 608; *Thompson* v. *Phillips*, Bald. 246; Am. Law Review, vol. i. p. 23; *Payne* v. *Hook*, 7 Wall. 425; *Cowles* v. *Mercer County*, id. 118; *Railway Company* v. *Whitton*, 13 id. 270; *Insurance Company* v. *Morse*, 20 id. 445; *Doyle* v. *Insurance Company*, 94 U. S. 535.

The courts of the United States for the districts of Illinois, in executing their decrees, do, by their own forms, modes of procedure, and process, give just and full effect to the equity of redemption, in foreclosure proceedings, so far as it constitutes an estate in the mortgagor.

A State statute which furnishes a rule of property or decision, within the meaning of the thirty-fourth section of the Judiciary Act, undoubtedly controls the contract; but "laws which relate to practice, process, or modes of proceeding before or after judgment, are exceptions to the thirty-fourth section." *Thompson* v. *Phillips*, *supra*; *Wayman* v. *Southard*, *supra*. Of the latter character is the statute in question. It relates only to the means for carrying a judgment or decree into execution; but it cannot reach the procedure and process of the courts of the United States.

The party who, in asserting his rights *ex contractu*, invokes the jurisdiction of the Federal courts is entitled to the methods and process by which it is exercised. It is urged by the appellant that the law in force when the contract is made forms a part of it. No reason can, however, be assigned why the Federal enactment establishing the forms of remedy, and the modes of proceeding in the Federal courts, does not enter into the contract with the same effect as the statutes of a State which prescribe the modes and incidents of the remedy in her own courts. If the appellee, although subject to the jurisdiction of the courts of the United States, contracted, by implication, to exclude their procedure, then those courts from time to time, and without reference to the act of 1828, must adapt their equity practice to the constantly recurring changes in State legislation.

MR. JUSTICE MILLER, after stating the case, delivered the opinion of the court.

We will notice the errors assigned in their order.

1. The money borrowed of the insurance company was evidenced by a bond for the principal sum of $7,000, and the semi-annual interest by coupons attached to said bond; and the court allowed interest on such of these coupons as were due and unpaid; and this is asserted to be error. We have decided more than once in this court that such instruments are so far distinct contracts for the payment of money, that when they become due they bear interest, and may be sued on separately from the bond. *Cromwell* v. *County of Sac*, *supra*, p. 51.

2. It is objected that complainant was allowed in the decree premiums paid for insurance of the house covered by the mortgage. The deed of trust required the grantors to keep the property insured for the benefit of complainant; and, when they failed to do this, we think the sum paid by the trustee for such insurance is a proper charge, and a lien under the trust-deed.

3. By reason of the conveyance of the lot to Pearce, after Walker had sold to Mrs. Brine, and received $5,000 of the purchase-money, the appellant, her heir, insisted that, before final decree in favor of the complainant, the right to the equity of redemption under the trust-deed should be ascertained and settled by the court, as between her and Pearce, in order that, if she paid the insurance company's debt, she might know what she was getting for it. For this purpose she made application to be permitted to file a cross-bill; but she did not pay, or offer to bring into court, for the use of the company, the money which was due on the mortgage. The court refused to delay the decree in favor of the complainant for this purpose, but, by the decree, allowed any of the defendants to pay the money found due within a hundred days, and thus prevent the sale; and it also ordered, that if the lot sold for more than the debt, interest, and costs, the excess should be paid into court. The rights of these parties to the surplus could then be litigated.

In this we are of the opinion the court did precisely what equity and equity practice required. The complainant's debt was due, and was undisputed as a lien on the lot paramount to all others;

and the complainant had no interest in the controversy between appellant and Pearce, and should not have been delayed until the end of a long suit for a specific performance, which could not affect the right of the complainant to have its money out of the lot.

While these errors are pointed out by the counsel for the appellant, in his brief, but little is said about them; and in the full and able arguments, oral and printed, by counsel on both sides, these questions are ignored or passed over in favor of one which they deem of very great importance; and in this they have the concurrence of the court.

4 It is said by counsel for the appellant that the statutes of Illinois allow one year after sale, in such a case as the present, for redemption by the debtor, and three months after that by any judgment creditor of the debtor; making fifteen months before the purchaser has a right to his deed and to possession. It is assigned for error that this decree not only makes no provision for such redemption, but, by its terms, cuts off and defeats that right.

If the point had been raised or insisted on by the appellee, it would admit of doubt whether this question is fairly raised by the decree; for while it orders the sale of the lot, and a report to the court, it says nothing about barring the equity of redemption, nor of the making of a deed; and, but for a single phrase in the decree, it would seem that the appropriate time to raise this question would be on the confirmation of the report of sale and the order for a deed to the purchaser, which has not yet been done. But it is conceded by counsel here on both sides, that it is according to the course and practice of the court that the master makes to the purchaser at the sale a deed for the land; which deed, by the uniform practice of the court, gives him the right to immediate possession, and cuts off all right of redemption, whether statutory or otherwise.

If this be true, which we have no reason to doubt, then the decree which ordered the sale to be made in accordance with the course and practice of the court does deny and defeat the right which the appellant asserts, to redeem by paying the amount of the bid, with interest, twelve months after the sale. As it is important to the holder of the equity of redemption to

know whether it is essential to the exercise of her right to redeem, that it be exercised before the sale, or can be with equal safety exercised a year later, and as the question is one of importance and frequent recurrence on the circuits, it is eminently proper that it be decided now.

The statutes of Illinois in force on this subject when this mortgage was made, and for a great many years before, are found in the Revised Statutes of 1845, pages 302-305, as follows: —

"It shall be lawful for any defendant, his heirs, executors, or grantees, whose land shall have been sold by virtue of any execution, within twelve months from such sale, to redeem such land, by paying to the purchaser thereof, his executors, administrators, or assigns, or to the sheriff or other officer who sold the same, for the benefit of such purchaser, the sum of money paid on the purchase thereof, together with interest thereon, at the rate of ten per cent per annum, from the time of such sale; and on such sum being paid as aforesaid, the sale and certificate shall be null and void."

"In all cases hereafter, where lands shall be sold under and by virtue of any decree of a court of equity, for the sale of mortgage-lands, it shall be lawful for the mortgagor of such lands, his heirs, executors, administrators, or grantees, to redeem the same, in the manner provided in this chapter for the redemption of lands sold by virtue of executions issued upon judgments at common law; and judgment creditors may redeem lands sold under any such decree, in the same manner as is prescribed for the redemption of lands sold on execution issued upon judgments at common law."

It is denied that these statutes are of any force in cases where the decree of foreclosure is rendered in a court of the United States, on the ground that the equity practice of these courts is governed solely by the precedents of the English Chancery Court as they existed prior to the declaration of independence, and by such rules of practice as have been established by the Supreme Court of the United States, or adopted by the circuit courts for their own guidance. And treating all the proceedings subsequent to a decree which are necessary for its enforcement as matter of practice, and as belonging solely to the course of procedure in courts of equity, it is said that not only do the manner of conducting the sale under a decree of foreclosure,

and all the incidents of such a sale, come within the rules of practice of the court, but that the effects of such a sale, on the rights acquired by the purchaser and those of the mortgagor, and his subsequent grantees, are also mere matters of practice to be regulated by the rules of the court, as found in the sources we have mentioned.

On the other hand, it is said that the effect of the sale and conveyance made by the commissioner is to transfer the title of real estate from one person to another, and that all the means by which the title to real property is transferred, whether by deed, by will, or by judicial proceeding, are subject to, and may be governed by, the legislative will of the State in which it lies, except where the law of the State on that subject impairs the obligation of a contract. And that all the laws of a State existing at the time a mortgage or any other contract is made, which affect the rights of the parties to the contract, enter into and become a part of it, and are obligatory on all courts which assume to give remedy on such contracts.

We are of opinion that the propositions last mentioned are sound; and if they are in conflict with the general doctrine of the exemption from State control of the chancery practice of the Federal courts, as regards mere modes of procedure, they are of paramount force, and the latter must to that extent give way. It would seem that no argument is necessary to establish the proposition that when substantial rights, resting upon a statute, which is clearly within the legislative power, come in conflict with mere forms and modes of procedure in the courts, the latter must give way, and adapt themselves to the forms necessary to give effect to such rights. The flexibility of chancery methods, by which it moulds its decrees so as to give appropriate relief in all cases within its jurisdiction, enables it to do this without violence to principle. If one or the other must give way, good sense unhesitatingly requires that justice and positive rights, founded both on valid statutes and valid contracts, should not be sacrificed to mere questions of mode and form.

Let us see if the statutes of Illinois on this subject do confer positive and substantial rights in this matter.

It is not denied that in suits for foreclosure in the courts of

that State the right to redeem within twelve months after the sale under a decree of foreclosure is a valid right, and one which must govern those courts.

Nor is it pretended that this court, or any other Federal court, can, in such case, review a decree of the State court which gives the right to redeem. This is a clear recognition that nothing in that statute is in conflict with any law of the United States. If this be so, how can a court, whose functions rest solely in powers conferred by the United States, administer a different law which is in conflict with the right in question? To do so is at once to introduce into the jurisprudence of the State of Illinois the discordant elements of a substantial right which is protected in one set of courts and denied in the other, with no superior to decide which is right. *Olcott* v. *Bynum et al.*, 17 Wall. 44; *Ex parte McNeil*, 13 id. 236.

Of the soundness of the first proposition of the appellant it would seem there can, under the decisions of this court, be little doubt.

The earliest utterance of the court on the subject is found in the case of the *United States* v. *Crosby* (7 Cranch, 115), in which this explicit language is used: "The court entertain no doubt on the subject; and are clearly of opinion that the title to land can be acquired and lost only in the manner prescribed by the law of the place where such land is situated." And in *Clark* v. *Graham* (6 Wheat. 577) it said: "It is perfectly clear that no title to lands can be acquired or passed, unless according to the laws of the State in which they are situate."

In the case of *McCormick* v. *Sullevant* (10 id. 192), the court held a will devising lands in Ohio, which was made and recorded in Pennsylvania, where the devisor resided, and which was otherwise perfect, inoperative to confer title in Ohio, because it had not been probated in that State, as the law of Ohio required. "It is an acknowledged principle of law," said the court, "that the title and disposition of real property is exclusively subject to the laws of the country where it is situated, which can alone prescribe the mode by which a title to it can pass from one person to another."

In the case of *Watts et al.* v. *Waddell et al.* (6 Pet. 389), a question very much like the one before us arose. Watts was

seeking to compel Waddell to accept a deed and pay for land which he had sold him many years before, the relief sought being in the nature of specific performance. It was objected that Watts could not convey a good title to a part of the land which he claimed to receive from the heirs of Powell by a decree rendered in the Circuit Court for the District of Kentucky. And although the proper parties were before that court, and a conveyance had been made to Watts by a commissioner appointed by the court, it was held that, as no statute of Ohio recognized such a mode of transferring title, the deed of the commissioner was wholly ineffectual. It will be seen that here was a court of equity, proceeding according to its usual forms, transferring title from one party to another, both of whom were before the court, yet its decree held wholly ineffectual under the principle we are considering.

We will close these citations by using the language which had the unanimous assent of the court in the recent case of *McGoon* v. *Scales* (9 Wall. 23): "It is a principle too firmly established to admit of dispute at this day, that to the law of the State in which land is situated must we look for the rules which govern its descent, alienation, and transfer, and for the effect and construction of conveyances."

The decree in this case, the sale made under it, and the deed made on that sale, will constitute a transfer of the title within the meaning of the principle thus laid down. Neither the purchaser at that sale, nor any one holding under him, can show title in any other way than through the judicial proceeding in this suit. These proceedings are a necessary part of the transfer of title. The legislature of Illinois has prescribed, as an essential element of the transfer by the courts in foreclosure suits, that there shall remain to the mortgagor the right of redemption for twelve months, and to judgment creditors a similar right for fifteen months, after the sale, before the right of the purchaser to the title becomes vested. This right, as a condition on which the title passes, is as obligatory on the Federal courts as on the State courts, because in both cases it is made a rule of property by the legislature, which had the power to prescribe such a rule. See *United States* v. *Fox*, 94 U. S. 315.

But there is another view of the question which is equally forcible, and which leads to the same result. All contracts between private parties are made with reference to the law of the place where they are made or are to be performed. Their construction, validity, and effect are governed by the place where they are made and are to be performed, if that be the same as it is in this case. It is, therefore, said that these laws enter into and become a part of the contract.

There is no doubt that a distinction has been drawn, or attempted to be drawn, between such laws as regulate the rights of the parties, and such as apply only to the remedy. It may be conceded that in some cases such a distinction exists. In the recent case of *Tennessee* v. *Sneed* (*supra*, p. 69), we held that, so long as there remained a sufficient remedy on the contract, an act of the legislature, changing the form of the remedy, did not impair the obligation of the contract. But this doctrine was said to be subject to the limitation that there remained a remedy which was complete, and which secured all the substantial rights of the party.

At all events, the decisions of this court are numerous that the laws which prescribe the mode of enforcing a contract, which are in existence when it is made, are so far a part of the contract that no change in these laws which seriously interfere with that enforcement are valid, because they impair its obligation within the meaning of the Constitution of the United States. *Edwards* v. *Kearzey*, *supra*, p. 595. That this very right of redemption, after a sale under a decree of foreclosure, is a part of the contract of mortgage, where the law giving the right exists when the contract is made, is very clearly stated by Mr. Chief Justice Taney, in the case of *Bronson* v. *Kinzie*, 1 How. 311. That case was one which turned on the identical statute of Illinois which is invoked by the appellant in this case. The mortgage, however, on which that suit was founded was made before the statute was passed; and the court held, that, because the statute conferred a new and additional right on one of the parties to the contract, which impaired its obligation, it was for that reason forbidden by the Constitution of the United States, and void as to that contract. But the Chief Justice, in delivering the opinion, further declared, that, as to all contracts

made after its enactment, the statute entered into and became a part of the contract, and was therefore valid and binding in the Federal courts as well as those of the State. As it is impossible to state the case and the doctrine applicable to the case before us any better, we give the language of the court on that occasion: —

"When this contract was made," said the court, "no statute had been passed by the State changing the rules of law or equity in relation to a contract of this kind, and it must, therefore, be governed, and the rights of the parties under it measured, by the rules above stated. They were the laws of Illinois at the time, and, therefore, entered into the contract, and formed a part of it, without any express stipulation to that effect in the deed. Thus, for example, there is no covenant in the instrument giving the mortgagor the right to redeem by paying the money after the day limited in the deed, and before he was foreclosed by the decree of the Court of Chancery: yet no one doubts his right or his remedy; for, by the laws of the State then in force, this right and this remedy were a part of the law of the contract, without any express agreement of the parties." Speaking of the law now under consideration, he said: "This law gives to the mortgagor and to the judgment creditor an equitable estate in the premises, which neither of them would have been entitled to under the original contract; and these new interests are directly and materially in conflict with those which the mortgagee acquired when the mortgage was made." "Mortgages made since the passage of these laws must undoubtedly be governed by them; for every State has the power to prescribe the legal and equitable obligations of a contract to be made and executed within its jurisdiction. It may exempt any property it thinks proper from sale for the payment of a debt, and may impose such conditions and restrictions upon the creditor as its judgment and policy may dictate. And all future contracts would be subject to such provisions, and they would be obligatory on the parties in the courts of the United States, as well as in those of the State."

In *Clark* v. *Reyburn* (8 Wall. 318), the court, in recognition of the doctrine that the statute becomes a part of the contract, uses this language: "In this country, the proceeding in most of

the States, and perhaps in all of them, is regulated by statute. The remedy thus provided, when the mortgage is executed, enters into the convention of the parties, in so far that any change by legislative authority which affects it substantially to the injury of the mortgagee, is held to be a law 'impairing the obligation of the contract,' within the meaning of the provision of the Constitution upon the subject."

We are not insensible to the fact that the industry of counsel has been rewarded by finding cases even in this court in which the proposition that the rules of practice of the Federal courts in suits in equity cannot be controlled by the laws of the States, is expressed in terms so emphatic and so general as to seem to justify the inference here urged upon us. But we do not find that it has been decided in any case that this principle has been carried so far as to deny to a party in those courts substantial rights conferred by the statute of a State, or to add to or take from a contract that which is made a part of it by the law of the State, except where the law impairs the obligation of a contract previously made. And we are of opinion that Mr. Chief Justice Taney expressed truly the sentiment of the court as it was organized in the case of *Bronson* v. *Kinzie*, as it is organized now, and as the law of the case is, when he said that "all future contracts would be subject to such provisions, and they would be obligatory upon the parties in the courts of the United States as well as those of the States."

It is not necessary, as has been repeatedly said in this court, that the form or mode of securing a right like this should follow precisely that prescribed by the statute. If the right is substantially preserved or secured, it may be done by such suitable methods as the flexibility of chancery proceedings will enable the court to adopt, and which are most in conformity with the practice of the court. *Ex parte McNeill*, 13 Wall. 236. In the case before us no better mode occurs to us than that prescribed by the statute; namely, that the master making the sale shall give to the purchaser a certificate of the sale, with the sum at which the land was sold, and a statement that, unless redeemed within fifteen months by some one authorized by the law to make such redemption, he will be entitled to a

deed. The matter being thus reported to the court, it can, at the end of the time limited, make such final decree of confirmation and foreclosure of all equities as are necessary and proper; or, if the land be redeemed, then such other decree as the rights of the parties consequent on such redemption may require.

The decree of the Circuit Court will be reversed, so far as it requires the sale to be made in accordance with the course and practice of the court, and the case remanded with directions to modify the decree, by making provision for the sale and redemption in conformity to this opinion; and it is

So ordered.

MR. JUSTICE HARLAN dissented.

GOLD-MINING COMPANY v. NATIONAL BANK.

1. A defendant, sued by a national bank for moneys it loaned him, cannot set up as a bar that they exceeded in amount one-tenth part of its capital stock actually paid in.
2. Where an agent, without authority, borrows moneys in the name of his principal, and the latter, when they have been applied to his use and payment is demanded of him, fails, within a reasonable time thereafter, to disavow the act of his agent, the jury is authorized to consider the principal as assenting to what was done in his name.
3. A juror in a civil action, who, on his *voire dire*, expresses an entire willingness, as well as ability, to accept the facts as they shall be developed by the evidence, and return a verdict in accordance with them, is not rendered incompetent by having previously conversed with a person about the case, and received an impression in relation to the facts.

ERROR to the Supreme Court of the Territory of Colorado.

The facts are stated in the opinion of the court.

Mr. Wheeler H. Peckham for the plaintiff in error.

Mr. J. M. Woolworth, contra.

MR. JUSTICE HUNT delivered the opinion of the court.

This was an action by the Rocky Mountain National Bank against the Union Gold-Mining Company of Colorado, to recover

a balance of overdraft, due upon the account kept at the bank, in the name of the company. The balance of over-draft, exceeding $20,000, was created by drafts or checks drawn by one Sabin, who, claiming to be the authorized agent of the company, acted in its name, and made deposits from time to time to its credit. The jury rendered a verdict in favor of the bank for the amount of the over-draft with interest ($30,358.32), and from the judgment entered upon that verdict the present writ of error is brought.

The defendant presented formal requests to charge to the number of forty, one of which was subdivided into three parts. It asked for a new trial upon ten grounds severally set forth; and the assignment of errors below discloses one hundred and thirty-three allegations of error.

There was but a single question in the case; to wit, Were the acts of Sabin the acts of the gold-mining company, either by original authority or by ratification? As it was finally put to the jury, Was there a ratification of his acts by the company? We shall consider the objections most seriously urged and having the greater plausibility.

The first objection to the recovery arises from the amount of the debt. The plaintiff is a national bank organized under the act of Congress of June 3, 1864, with a capital stock of $50,000. 13 Stat. 99. By the twenty-ninth section of that act, it is provided as follows: "The total liabilities to any association of any person, or of any company, corporation, or firm, for money borrowed, including in the liabilities of a company or firm the liabilities of the several members thereof, shall at no time exceed one-tenth part of the amount of the capital stock of such association actually paid in." Rev. Stat., sect. 5200.

After obtaining and holding to its own use the money, can the mining company be allowed to interpose the plea that the bank had no right to loan the money? In *Harris* v. *Runnels* (12 How. 79), where the defendant sued upon a note set up the illegality of its consideration, it was held that the whole statute then in question must be examined to discover whether it intended to prevent courts of justice from enforcing contracts in relation to the act prohibited; and that when a statute prohibits an act, or annexes a penalty for its commission,

it does not follow that the unlawfulness of the act was meant to avoid a contract made in contravention of it. A statute provided that slaves should not be brought into the State without a previous certificate signed by two freeholders. Slaves were brought in without such certificate and sold, and the purchaser was held liable for the purchase-money. Mr. Justice Wayne said that the rule was allowed not for the benefit of either party to the illegal contract, but altogether upon grounds of public policy.

In *O'Hare* v. *The Second National Bank of Titusville* (77 Pa. St. 96), the question was made upon the statute we are considering, and it was objected that the bank could not recover the amount of the loans in excess of the proportion specified. The court held that the section of the statute referred to was intended as a rule for the government of the bank, and that the loan was not void. See also *Pangborn* v. *Westlake et al.*, 36 Iowa, 546; *Vining et al.* v. *Bricker*, 14 Ohio St. 331.

We do not think that public policy requires or that Congress intended that an excess of loans beyond the proportion specified should enable the borrower to avoid the payment of the money actually received by him. This would be to injure the interests of creditors, stockholders, and all who have an interest in the safety and prosperity of the bank.

We are of the opinion that this objection is not well taken.

It is contended that there was error in admitting Perrin to sit as a juror in the cause. It appears that he had previously conversed with another party in relation to the facts of the case, and had received from him an impression in relation to them. He expressed an entire willingness, as well as an ability, to accept the facts as they should be developed by the evidence, and to render a verdict in accordance with them. He was evidently an intelligent man, and well qualified to act as a juror in such a case. When his name was called, he was sworn to answer truly to such questions as should be put to him touching his competency to sit as a juror in the case. Questions were put to him by the respective counsel, and were answered by him, the result of which was as above stated. At the close of his examination, the record states as follows; viz., "By the court. Well, I think he is competent. Here the defendant

challenged the juror Perrin, for cause. The court denied the challenge, and the defendant then and there excepted to the ruling of the court." It is not so stated in words, but it is assumed that thereupon Perrin took his seat as a juror, and acted as such during the trial. The facts as stated by the juror do not justify a challenge for cause in a civil action. *Rogers* v. *Rogers*, 14 Wend. (N. Y.) 131; *Jackson* v. *The Commonwealth*, 23 Gratt. (Va.) 919; *Freeman* v. *The People*, 4 Den. (N. Y.) 9; *Lowenberg* v. *People*, 5 Park. Cr. (N. Y.) 414; *Sanchez* v. *The People*, 22 N. Y. 147.

The decision of the challenge was submitted to the judge, and we see no just cause of complaint in his decision.

Numerous objections were made to the admission and rejection of evidence, which do not require consideration. We refer only to the objection to the statements or admissions of Becker, the president of the mining company. These were made at various times at Colorado and at New York.

The defendant was a mining company organized under the laws of the State of New York, but whose mines and whose business (so far as it had any) were in Colorado. Sabin leased a part of their mines, and professed to carry on another portion of them on account of the company, and to borrow the money for its use in that business.

Becker spent much time in Colorado in attending to the company's business there; and, omitting the questionable position of Sabin, he was the only representative in that region.

The effort of the plaintiff on the trial was to show an original authority in Sabin to draw checks in the name of the company, and, failing in that, to establish a ratification of his acts by which the company would be chargeable. To this end, the knowledge of Becker of what was done by Sabin, and his action in relation thereto, were given in evidence.

The effect of this evidence and of the objections thereto is much diminished by the charge given by the judge, that the jury might assume that, prior to the 16th of December, 1868, Sabin had no authority to borrow money in its name, but that it was competent for the defendant to ratify the acts and assume the indebtedness created in its name. He further charged them that if Sabin was its agent, and borrowed money in its name

which was expended in the defendant's business, and the payment thereof was demanded of the defendant, they were to consider whether the defendant, with knowledge of the fact, assented to such demand, and approved the act of Sabin in obtaining the money; that if acts have been done by an agent in excess of his authority, and the principal on being informed of them fails to disavow them in a reasonable time, his silence may be considered as an acquiescence in and an assent to the acts done.

On the 16th of December, 1868, Becker, the president, closed up the accounts of the company with Sabin, and paid him the balance due to him. Sabin's books and the bank-books were then present, and Becker knew the amount of the indebtedness which had then been incurred by Sabin to the bank in the name of the company. This settlement was in the presence of the cashier of the bank, and made by his aid. This was clear and distinct notice to Becker of the action of this agent of his company in its name. Becker, as president of the company, was the suitable man to receive the information; and what he said and did about it, and what action in repudiating the doings of Sabin was taken by the company, or whether there was no disavowal, might well be learned from its chief officer.

Potter and Kountze were officers of the bank, and their conversations with Becker were of a similar character.

The court expressly informed the jury that these conversations were allowed for the purpose of showing Becker's knowledge of the indebtedness and the demand upon him for its payment, and not for the purpose of showing a promise on the part of the defendant.

We see no error in this branch of the case.

The judge's charge on the subject of the ratification by the company of the acts of Sabin contained all that it was necessary to say to the jury. It was in substance, that if Sabin was the agent of the company in working its mines in Colorado in 1867 and 1868, without authority to borrow money in its name, but did in fact borrow large sums of the plaintiff in its name, if, on the 16th of December, 1868, the president of the company was informed of such borrowing and of the amounts, and a

demand was made for the payment thereof, and if within a reasonable time thereafter the company failed to disavow the acts of its agent in so borrowing the money, the jury would be authorized to consider the company as assenting to what was done in its name. We consider this charge entirely correct. *Vianna* v. *Barclay*, 3 Cow. (N.Y.) 281; *Hazard* v. *Spear*, 4 Keyes (N. Y.), 469; *Cairnes* v. *Bleecker*, 12 Johns. (N. Y.) 300.

Judgment affirmed.

INSURANCE COMPANY v. GOSSLER.

1 So long as a vessel exists *in specie* in the hands of the owner, although she may require repairs greater than her value, a case of "utter loss," within the meaning of a bottomry and respondentia bond, does not arise, and she continues subject to the hypothecation.

2. The holder of such a bond, which was conditioned to be void should an utter loss from any of the enumerated perils occur, is, upon a wreck of the vessel during the specified voyage, not amounting to such loss, entitled to the proceeds of the cargo saved by his efforts, as against the insurers thereof, who accepted an abandonment by the owners as for a "total loss," and paid the amount of their policies, said proceeds being insufficient to satisfy the bond. *So held* in this case, which relates solely to such proceeds.

ERROR to the Circuit Court of the United States for the District of Massachusetts.

The plaintiff, the Delaware Mutual Safety Insurance Company, was insurer of a cargo of sugar on board the "Frances," from Java to Boston. After leaving her port of departure, the vessel encountered a hurricane, which compelled her to proceed to Singapore, where she was repaired and fitted to continue the voyage.

To meet the expenses of repairs, the master was obliged to borrow at Singapore the sum of $26,055.43, Singapore currency, and to execute, on the twelfth day of July, 1872, a bottomry bond for that sum, with marine interest at twenty-seven and a half per cent, upon the vessel and freight.

The bond contained the following stipulation: —

"*Provided, nevertheless*, and it is hereby agreed, that if, in the course of the said voyage, an utter loss of the said vessel by fire,

lightning, enemies, men-of-war, or any other perils, dangers, accidents, or casualties of the seas or navigation, shall unavoidably happen, then the said loan and interest shall not be payable, and all parties liable therefor shall be wholly discharged therefrom, and the loss shall be wholly borne by the said lenders or bondholders, and every thing herein contained for payment thereof shall be void and determined; save and except only, and provided in such case, that the said lenders or bondholders shall be entitled to such average as can be hereby lawfully secured to them on all salvage recoverable in respect to the said vessel, freight, and goods, or any of them."

The vessel sailed from Singapore for Boston, encountered a storm in the month of December following, and was cast ashore on Cape Cod, Mass.

The defendants, Gossler & Co., who were agents of the bondholders and assignees of the bond, succeeded in saving somewhat less than half the sugar on board, and forwarded it to Boston.

The vessel, as she lay upon the beach, was surveyed, and, having been found incapable of repair, was broken up, and her materials were sold. When she was sold, she lay "on the beach, full of water, as high as she could, but so low as to be submerged at high-water." The chains and anchors, sails and rigging and hull, were sold separately, at auction, by the underwriter, in January, 1873: the chains, anchors, and other utensils bringing $1,494.75; the sails and rigging, $2,323.70; and the hull, $2,000.

Upon learning of the disaster, the owners of the cargo made abandonments in writing to the plaintiff as the underwriter thereon, and claimed payment for a total loss under their respective policies.

The letters of abandonment were dated, respectively, Dec. 28, 30, and 31, 1872.

In March, 1873, the plaintiff paid to each owner the amount of a total loss under his policy; and received on the same date, from them so insured and paid, an assignment and transfer in writing of "the sugar of said owners, and all their right, title, interest, trusts, claim, and demand therein and thereto."

The defendants, as agents of the bondholders, with the consent of the owners of the cargo, proceeded to sell the sugar saved; and now hold the proceeds, claiming them on account of said bond, such proceeds not being sufficient to satisfy it. The plaintiff having, at all times, claimed them, as the underwriter who accepted abandonments and paid a total loss thereon, brought this action to recover them.

The case was tried by the court below; and, judgment having been rendered for the defendants, the company brought the case here.

Mr. William G. Russell and *Mr. Charles M. Reed* for the plaintiff in error.

The facts show an "utter loss" of the vessel. *Thompson* v. *The Royal Exchange Assurance Co.*, 1 M. & S. 30; *The Elephanta*, 9 Eng. L. & Eq. 553; *Joyce* v. *Williamson*, 3 Doug. 164; *Pope et al.* v. *Nickerson et al.*, 3 Story, 465; *Murray* v. *Hatch*, 6 Mass. 464; *Cambridge* v. *Anderton*, 2 Barn. & Cress. 691; *Roux* v. *Salvador*, 3 Bing. N. C. 266; 2 Arnould, Ins., sect. 364, 365; Marshall, Ins. 446; 2 Parsons, Mar. Ins. 73; 2 Phillips, Ins., sect. 1485; *Barker* v. *Janson*, Law Rep. 3 C. P. 303; *Walker* v. *Protection Insurance Co.*, 29 Me. 317; *Gardner* v. *Salvador*, 1 Moo. & R. 116; *Irving* v. *Manning*, 1 H. L. Rep. Cas. 287; *Mullett* v. *Shedden*, 13 East, 303; *Cambridge* v. *Anderson*, Ry. & M. 60; *Poole* v. *The Protection Insurance Co.*, 14 Conn. 46; *Tudor* v. *New England Mutual Marine Insurance Co.*, 12 Cush. (Mass.) 554; *Hugg* v. *Augusta Insurance & Banking Co.*, 7 How. 595; *Dyson* v. *Rowcroft*, 3 Bos. & Pul. 474; *Appleton* v. *Crowninshield*, 3 Mass. 443; *Peele* v. *Suffolk Insurance Co.*, 7 Pick. (Mass.) 254; *Peele et al.* v. *Merchants' Insurance Co.*, 3 Mason, 27; *Crosby* v. *New York Mutual Insurance Co.*, 5 Bosw. (N. Y.) 369; *Stagg* v. *United Insurance Co.*, 3 Johns. (N. Y.) Cas. 34; *Coit* v. *Smith*, id. 16.

The utter loss of the vessel having avoided the bond, the holders of it had no right, under its terms, to the proceeds of the cargo saved from the wreck. 1 Parsons, Mar. Ins. 221; 2 Park, Ins. 628, 629; 2 Phillips, Ins., sect. 1488; *Joyce* v. *Williamson*, 3 Doug. 164; *Robertson & Brown* v. *United Insurance Co.*, 2 Johns. (N. Y.) Cas. 250; *Appleton* v. *Crowninshield*, 8 Mass. 340; *Thorndike* v. *Stone*, 11 Pick. (Mass.) 183; *Bray*

v. *Bates and Another*, 9 Metc. (Mass.) 237; *The Insurance Company of Pennsylvania* v. *Duval and Another*, 8 Serg. & R. (Pa.) 138; *The Virgin*, 8 Pet. 538; *The Hunter*, 1 Ware, 251; 1 Parsons, Mar. Law, 420, and cases cited; Marshall, Ins., c. 13, sect. 7; *Stephen* v. *Broomfield*, L. R. 2 P. C. 516; *Columbian Insurance Co.* v. *Ashby*, 13 Pet. 331; *Gray* v. *Waln*, 2 Serg. & R. (Pa.) 229.

Mr. Charles A. Welch, *contra*, cited *The Virgin*, 8 Pet. 538; 3 Kent, Com. 359, 360; 2 Arnould, Ins., sect. 392; 1 Phillips, Ins., sect. 1170; Abbott, Shipp., p. 126; Maude & Pollock, Shipp., p. 440; Maclachlan, Shipp., p. 57; Hopkins' Hand-Book of Average, p. 93; Crump, Mar. Ins., sect. 147; *Thompson* v. *The Royal Exchange Assurance Co.*, 1 M. & S. 30; *The Great Pacific*, Law Rep. 2 Ad. & Ec. 381; s. c. Law Rep. 2 P. C. 516; *Broomfield* v. *Southern Insurance Co.*, Law Rep. 5 Ex. 192; *The Insurance Company of Pennsylvania* v. *Duval and Another*, 8 Serg. & R. (Pa.) 138; *Delaware Insurance Co.* v. *Archer*, 3 Rawle (Pa.), 216; *The Catherine*, 1 Eng. L. & Eq. 679; *The Elephanta*, 9 id. 553; Bynkershoek, Quæst. Pub., lib. 3, ch. 16; *The Dante*, 2 W. Rob. 427; *Stephen* v. *Broomfield*, Law Rep. 2 P. C. 516.

MR. JUSTICE CLIFFORD delivered the opinion of the court.

Maritime hypothecations had their origin in the necessities of commerce, and they are said to be the creatures of necessity and distress. When properly authorized and duly executed, they are of a high and privileged character, and are held in great sanctity by maritime courts. *The Vibilia*, 1 W. Rob. 1; *The Rhadamanthe*, 1 Dod. 201; *The Hero*, 2 id. 139; *The Kennersley Castle*, 3 Hagg. 1.

Instruments of hypothecation are usually executed by the master, he being regarded as the agent of the owner; the rule being that the owner is bound to the performance of all lawful contracts made by the master relative to the usual employment of the ship, and to the repairs and other necessaries furnished for her use. *The Aurora*, 1 Wheat. 96.

Contracts of the kind are authorized in emergencies, for the purpose of procuring necessary repairs and supplies for ships which may happen to be in distress in foreign ports, where the

master and the owners are without credit, and where, unless assistance can be procured by means of such an hypothecation, the voyage must be broken up, or the vessel and cargo must perish. *Burker* v. *The Brig M. P. Rich*, 1 Cliff. 308.

Such an hypothecation of the vessel by the master is only authorized when based upon necessity. And the required necessity is twofold in its character: it must be a necessity of obtaining repairs or supplies in order to prosecute the voyage, and also of resorting to such an hypothecation from inability to procure the required funds in any other way. *Thomas et al.* v. *Osborn*, 19 How. 22; *The Hersey*, 3 Hagg. 404.

Sufficient appears to show that the plaintiffs were the underwriters on the cargo of the bark "Frances," consisting of sugar, on her voyage from Java to Boston; that, in due course of navigation, the bark sailed from a port of Java, duly laden, for her return port; that she soon encountered a hurricane, which compelled the master to cut away her masts to save the vessel, and to put into a neighboring port for repairs, from whence it became necessary for the bark to proceed to the port of Singapore to fit the vessel to continue the voyage. Destitute of funds to pay the expenses incurred for the repairs, and without credit, the master was obliged to execute a bottomry bond there for the sum necessary to liquidate those expenses, with marine interest at twenty-seven and one-half per cent, upon the bark, cargo, and freight. All matters of the sort having been adjusted, the bark sailed from the port of Singapore for the port of Boston; but, before she reached her port of destination, she encountered a storm, and in the month of December of that year was wrecked and driven ashore on Cape Cod. Prompt measures for saving as much as possible from the wreck were adopted by the defendants, who were the agents of the bondholders or the assignees of the same; and it appears that they succeeded in saving nearly half of the cargo, which was sent forward to Boston, and was subsequently sold with the consent of the owners.

Subsequent to the shipwreck, the bark was surveyed as she lay upon the beach; and, being found to be incapable of being repaired, she was broken up, and her material was sold in separate parcels, including the hull, chains, anchors, sails, and rig-

ging; and, when the owners of the cargo were informed of the disaster, they made abandonment in writing to the underwriters, under each policy of the respective dates, as stated in the agreed statement, claiming payment on each policy as for a total loss. Pursuant to that claim, the plaintiffs, as such underwriters, paid to the insured owners of the cargo the amount as for a total loss under each policy, and received from the owners an assignment and transfer in writing of the sugar of the owners, and of all their right, title, and interest in the same.

Two other matters are admitted: 1. That the defendants hold the proceeds of the sugar, the amount being less than the amount of the bond. 2. That the plaintiffs accepted the abandonments tendered by the owners of the cargo, and have at all times claimed what was saved of the cargo.

Payment being refused, the plaintiffs brought an action of assumpsit against the defendants for money had and received, and the parties submitted the case to the Circuit Court, upon an agreed statement of facts. Hearing was had, and the Circuit Court rendered judgment for the defendants, and the plaintiffs sued out the present writ of error.

Due execution of the bond in question is conceded; nor is it questioned that the circumstances were such at the time as to give the master the power to make the loan, nor that the bond by its terms covers the cargo and pending freight as well as the bark, unless an utter loss of the vessel occurred during the voyage.

Authority of the master to hypothecate the ship and pending freight in such a case, whenever, within the meaning of the maritime law, it becomes necessary to enable him to complete the enterprise in which the ship is engaged, was never doubted, whether the occasion arises from extraordinary peril or misfortune, or from the ordinary course of the adventure. Nothing but necessity can be a proper foundation for such an hypothecation. And that necessity, as before stated, must be twofold in its character: first, it must be a necessity of obtaining repairs or supplies in order to prosecute the voyage; secondly, it must be a necessity of resorting to a bottomry bond, from inability to procure the required funds in any other way. *The Hersey*,

3 Hagg. 404; *The Fortitude*, 3 Sumn. 234; 1 Conkl. Adm. (2d ed.) 269; Abbott, Shipp. (11th ed.) 126.

Ship-owners appoint the master, and they are in general responsible for his acts; but the general rule is different as to the cargo, in respect to which the master is the mere depositary and common carrier, whose whole relation to the goods consists in his obligation of due conveyance, safe custody, and right delivery.

Viewed in that light, it was supposed at one time that the master had no power to hypothecate the cargo to raise funds to prosecute the voyage, whatever the necessity might be; but the rule is now well settled the other way, that the hypothecation may extend to the cargo as well as to the ship and freight. *The Lord Cochrane*, 1 W. Rob. 313; *The Gratitudine*, 3 C. Rob. 240; *The Packet*, 3 Mason, 257; *The Zephyr*, id. 343; *The United Insurance Co.* v. *Scott*, 1 Johns. (N. Y.) 105; *Fontaine* v. *The Colombian Insurance Co.*, 9 id. 29; *Searle* v. *Scovell*, 4 Johns. (N. Y.) Ch. 218; *The American Insurance Co.* v. *Coster*, 3 Paige (N. Y.), 323.

Bottomry bonds, when given *bona fide* and for legitimate purposes, are to be liberally protected. It is important for the interests of commerce that a master in a foreign port, standing in need of assistance, arising out of some unforeseen necessity, to complete a voyage, and having no credit, should for that object be invested with authority to pledge the ship, and charge upon it the repayment of the loan in case of her safe arrival. *The Reliance*, 3 Hagg. 66.

Beyond all doubt, the bond in this case hypothecates the cargo as well as the vessel and the unpaid freight by way of bottomry, as security for the payment of the loan on the terms and conditions specified in the instrument, which are as follows: 1. That the vessel shall proceed, and complete her voyage without unnecessary deviation. 2. That the principal and marine interest shall be paid in the manner specified, within three days after the safe arrival of the vessel at the port of destination, and before the cargo is landed or the freight collected. 3. That the cargo shall not be landed nor the freight collected until the payment is made, and that the bondholders for the time being shall have the privilege of enforcing those

conditions. 4. That interest on the aggregate amount at the current rate in the port of destination shall be paid in case of failure to discharge the amount of the principal and marine interest as stipulated.

Superadded to those terms and conditions is the following stipulation, in the form of a proviso: that if in the course of the voyage an utter loss of the vessel by fire, lightning, enemies, men-of-war, or any other perils, dangers, accidents, or casualties of the seas or navigation, shall unavoidably happen, then the loan and interest shall not be payable; and all parties liable therefor shall be wholly discharged therefrom, and the loss shall be wholly borne by the lenders or bondholders, and every thing herein contained for payment shall be void and determined, save and except only, and provided in such case, that the lender or bondholders shall be entitled to such average as can be hereby lawfully secured to them on all salvage recoverable in respect to the vessel, freight, and goods, or any of them.

Difference of opinion exists among Continental writers as to the meaning of the exception at the close of the preceding condition; but the great weight of authority, even from that source, is, that the holder of the bottomry bond is preferred over the insurer or owner, to the extent of his legal claim for principal and marine interest secured by the bond. 3 Boulay Paty, Cours de Droit Commercial Maritime, 183.

Instead of that, Valin holds that the lender on bottomry is entitled in such a case only to such a proportion of the value of the property salved as the sum loaned bears to the whole value of the property hypothecated. Pothier and Émérigon concur with the writer first named; and the Court of Privy Council Appeals decided, that, if the vessel is lost, the lender on bottomry, though his remedy is limited to the value of the property salved, is entitled to the whole of what is saved, provided it was included in his security. *Stephens* v. *Broomfield*, Law Rep. 2 P. C. 522; 2 Émérigon, Traité des Assurances Maritimes et des Contrats à la grosse, 544.

Much discussion took place in the preceding case, as to the meaning of the stipulation in the closing part of the condition of the instrument, which was quite similar in legal effect to the

closing exception in the present case; the contention being there, as here, that it gave the owners of the ship or cargo, as the case may be, the right to share in the salved property: but the court, without hesitation, rejected the proposition; holding that the theory involved a forced construction of the stipulation, utterly inconsistent with such a maritime contract, and that it reserved no such right to the owners. *The Great Pacific*, L. R. 2 Ad. & Ec. 381.

Authorities to show that the doctrine of constructive total loss is in no respect applicable to such a contract are numerous, unanimous, and decisive. *Thomson* v. *The Royal Exchange Assurance Co.*, 1 M. & S. 30.

In the case of bottomry, said the Chief Justice in that case, nothing short of a total destruction of the ship will constitute an utter loss; for, if it exist *in specie* in the hands of the owner, it will prevent an utter loss: and text-writers of the highest repute adopt the same rule, and express it in substantially the same language. Nothing but an utter annihilation of the subject hypothecated, says Chancellor Kent, will discharge the borrower on bottomry; the rule being that the property saved, whatever it may be in amount, continues subject to the hypothecation. 3 Kent, Com. (12th ed.) 359; Williams & Bruce, Prac. 47.

Unless the ship be actually destroyed, and the loss to the owners absolute, it is not an utter loss within the meaning of such a contract. If the ship still exists, although in such a state of damage as to be constructively totally lost, within the meaning of a policy of insurance; or if she is captured, and afterwards retaken and restored, she is not utterly lost, within the meaning of that phrase in the contract of hypothecation. Maude & Pollock, Shipp. (3d ed.) 44; *The Catherine*, 1 Eng. L. & Eq. 679; *The Elephanta*, 9 id. 553.

Support to that view, of a decisive character, is derived from the case of *Pope* v. *Nickerson* (3 Story, 489), decided by Judge Story, where he says, that, in cases of bottomry, nothing but an actual total loss of the ship in the voyage will excuse the borrower from payment, not even when by reason of the enumerated perils the ship shall require repairs greater than her value; and he adds, that the proposition is fully borne out by

authority; and he adopts and fully approves what was decided in the case of *Thomson* v. *The Royal Exchange Assurance Company*, to which reference has already been made, that the question in such a case is not, whether the circumstances were such as that, in case of insurance, the insured might have abandoned the ship, but whether it was an utter loss within the true intent and meaning of a bottomry contract; and he held that, in cases of bottomry, a loss not strictly total cannot be turned into a technical total loss by abandonment, so as to excuse the borrower from payment, even when the expense of repairing the ship exceeds her value.

Hypothecations of the kind are created by contract in writing, whereby the master of a vessel in a foreign port, not having any credit in the port where the vessel is lying, is enabled to obtain money for the repair and equipment of the vessel, and for necessary supplies for the prosecution of the voyage, by creating a charge or lien upon the vessel and freight, or upon the vessel, freight, and cargo, in favor of the lender; so that, if the vessel or cargo is sold or mortgaged by the owners, the property will be burdened with the charge or lien in the hands of the purchaser or mortgagee. Addison, Contr. (6th ed.) 275.

Contracts regularly created in that mode, and for that purpose, give rise to a maritime lien well understood in the civil law as existing, even without actual or constructive possession; the rule being, that, wherever a maritime lien of the kind exists, it gives a *jus ad rem* to the property to which it attaches, to be carried into effect by appropriate legal process. Such a contract does not transfer the property hypothecated; but only gives the creditor a privilege or claim upon it, to be carried into effect by legal process, in case the vessel arrives at the port of destination in safety. Abbott, Shipp. (11th ed.) 128; *The Tobago*, 5 C. Rob. 218; *Stainbank* v. *Fenning*, 11 C. B. 88; *Stainbank* v. *Shepard*, 13 id. 417.

Where several securities of the kind are given upon the same ship and cargo, the rule is, all other things being equal, that they take effect in the inverse order of their dates; because it is supposed that the last loan furnished the means of preserving the ship, and that without it the prior lenders would have entirely lost their security. *The Eliza*, 3 Hagg. 86.

Subject to the rule that requires diligence in putting the bond in suit, securities of this nature, when the fund is deficient, take priority, as before remarked, in the inverse order of their dates; the ground for the preference of the later bonds to the earlier being the condition of necessity on which the validity of each is originally dependent, which is applicable to the last as well as to the first, and is regarded as a safe reason for presuming that the one latest in date furnished the means for preserving the property for the earlier lender. Maclachlan, Shipp. (2d ed.) 5.

Liens of the kind are preferred to all other claims upon the property, except those arising from seamen's wages, the claims of salvors for subsequent service in saving the adventure, and the holder of a subsequent bottomry bond. *The William F. Safford*, Lush. 69; *The Priscilla*, id. 1.

Throughout, it should be borne in mind that the bond in this case covers the bark, pending freight and cargo, and that the controversy in the case has respect only to the proceeds derived from the sale of so much of the cargo as was saved by the efforts of the defendants. Where the bond only covers the ship, the lenders run no risk as to the cargo, as they must be paid if the ship arrives in safety, even though the whole cargo is lost; but, where the bond covers the cargo as well as the vessel, the lender, unless the condition is otherwise, is entitled to be paid even if the ship is lost, if enough of the cargo arrives in safety to pay the bottomry loan, the rule being that the maritime lien of the lender attaches to the entire property covered by the bond, or, to all that part of it which arrives at the port of destination in safety.

Actual total loss of the property by the described perils displaces the lien of the lender, and defeats his right of recovery; but the rule is, that, if the ship is once bottomried, the bond attaches to the very last plank, and the holder of the bond may have that sold for his benefit. *The Catherine*, 1 Eng. L. & Eq. 679.

Abundant authority exists for that proposition, and the court is of the opinion that the same rule is applicable to the cargo in cases where it is without condition covered by the bond. *The Virgin*, 8 Pet. 538.

Prior remarks are sufficient to show that the doctrine of constructive total loss is not applicable to contracts of bottomry, which serves very strongly to show that the maritime lien of the bondholder attaches to every part of the property covered by the bond, as seems to follow from all the authorities upon the subject. *Broomfield* v. *Southern Insurance Co.*, L. R. 5 Ex. 192.

Slight differences exist between a loan on the ship and a *respondentia* loan or loan on the cargo; but it is unnecessary to remark upon that distinction, as the bond in this case covers the bark as well as the cargo. 2 Marsh. 734; *Stephens* v. *Broomfield*, 6 Moore, P. C. N. S. 161.

By the general marine law, the lender on bottomry is entitled to be paid out of the effects saved, so far as those effects go, if the voyage be disastrous. *Appleton* v. *Crowninshield*, 3 Mass 443.

Underwriters and lenders on bottomry stand upon a different footing, as was well explained at a very early period in our judicial history. *Wilmer* v. *Smilax*, 2 Pet. Adm. 299.

By an abandonment, the insurer is placed in the situation of the insured whom he represents, and can have no greater right than the insured would have had. Unlike that, the lender on bottomry loses his remedy only when the ship or other property hypothecated is wholly lost; and, where parts are preserved, such parts are esteemed his proper goods, being presumed to be the product of his money; and he, therefore, takes preference of the owner or insurer. In case of shipwreck, "the owners are not personally bound, except to the extent of the fund salved which has come into their hands." *The Virgin*, 8 Pet. 538.

"Utterly lost," said Chief Justice Tilghman, is a strong expression; intended, as he held, to distinguish the case from one where the vessel is technically lost, as in case of abandonment. Such must have been his meaning; for he adds, that a ship is not utterly lost while she remains *in specie* in the hands of the owners. "Had she been taken by an enemy, she would have been utterly lost to the owner," unless she had been recaptured and restored. "So, had she been burnt, or wrecked and gone to pieces," unless some of her sails, masts, anchors, or chains had been saved. But she is not utterly lost merely because it

may cost more than she is worth to repair her. *Insurance Company of Pennsylvania* v. *Duval et al.*, 8 S. & R. (Pa.) 138.

Salved property, in case of wreck or other disaster, says Phillips, continues to be subject to the hypothecation; but, if the loss is by the perils assumed by the lender, the borrower becomes discharged from all liability on his bond, excepting to the amount saved. Nothing short of a total loss will discharge the borrower. 2 Phillips, Ins. (5th ed.), sect. 1170.

High authority also exists for the proposition, that a total loss within the meaning of a bottomry bond cannot happen if the ship exists *in specie*, although she may be so much injured on the voyage as not to be worth repairing and bringing to the ultimate place of departure. Abbott, Shipp. (11th ed.) 126.

Bynkershoek defines such contracts to be a pledge of the vessel or other effects upon which the loan is made, and of what may remain of them after any event by which the personal responsibility is excused. Bynk., Quæst. Pub., lib. 8, c. 16.

From the moment of the accident, says Émérigon, the lender is seised of right to the effects saved, he having a special lien upon them for the payment of his debt, saving the freight and salvage; and the French ordinance is to the same effect, the rule there promulgated being that in case of shipwreck the security of the loan is reduced to the value of the effects saved from loss. Title 5, art. 17.

Decided support to the proposition that the lien extends to whatever is saved from the property covered by the bond is also derived from a case in which the opinion was given by Chief Justice Gibson, in which he expressly decided that the lender in a *respondentia* bond takes the risk only of a total loss, that any part of the property which arrives goes to the holder of the bond, without regard to whether it be great or whether it be small, so that it does not exceed the amount of the loan. *The Delaware Insurance Co.* v. *Archer*, 3 Rawle (Pa.), 226.

Rules of law defining the right of abandonment in cases of insurance do not apply in bottomry controversies, as there is no constructive total loss in the latter class of litigation. In-

stead of that, the rule is, that if the ship exists *in specie*, though in a state which would warrant an insured to make an abandonment, as where the cost of repairs would greatly exceed the value when repaired, the lender on bottomry may still recover; for the ship must be absolutely and wholly destroyed, in order to discharge the borrowers. 2 Arnould, Ins., by Maclachlan (4th ed.), 945.

Examined in the light of these authorities, it is clear that the bark in this case was not utterly lost within the meaning of the bottomry bond, when considered in view of the facts as they existed at the time the vessel was sold, and before she was voluntarily broken up by the purchaser. Subsequent acts of the purchasers cannot affect the right of the defendants; and, if not, then the proof is full to the point that the vessel existed *in specie* as she lay stranded on the beach. *The Brig Draco*, 2 Sumn. 157.

Shipwreck occurred in this case before the bark arrived at her port of destination: but the agreed statement shows that the vessel, though "cast ashore," still existed *in specie*, and that the voyage was terminated by a sale of the bark at an intermediate place; that she was surveyed subsequent to the disaster, as she lay upon the beach, and, though found to be incapable of repair, she was not an utter loss within the maritime rule applicable in such a case; nor can the act of the owners in making an abandonment as for a constructive total loss have any effect to conclude or impair the rights of the defendants as the holders of the bottomry bond.

Judgment affirmed.

KETCHUM v. DUNCAN.

HAYS v. KETCHUM.

1. While it is true that it is essential to a sale that both parties should consent to it, yet the consent of the former owner need not be expressly given, but may be inferred from the circumstances of the transaction.
2. The title to interest-coupons passes from hand to hand by mere delivery. A transfer of possession is presumptively a transfer of title, but does not import a guaranty of payment.
3. An estoppel *in pais* can be set up only by a person who has been misled to his injury.
4. The court, on considering the facts in this case, *holds* that the coupons of May and November, 1874, of the bonds of the Mobile and Ohio Railroad Company, represented as owned by Alexander Duncan, are existing liabilities of that company protected by its first mortgage, and that they have no equity superior to that of the bonds from which they were taken, or of the subsequently maturing coupons.

APPEALS from the Circuit Court of the United States for the Southern District of Alabama.

The facts are stated in the opinion of the court.

The first case was argued by *Mr. George Hoadly* and *Mr. E. L. Andrews* for the appellants, and by *Mr. John A. Campbell* and *Mr. F. N. Bangs* for the appellees.

The second case was argued by *Mr. John A. Campbell* and *Mr. F. N. Bangs* for the appellants, and by *Mr. George Hoadly* and *Mr. E. L. Andrews* for the appellees.

MR. JUSTICE STRONG delivered the opinion of the court.

The principal question attempted to be raised by the appellants is, whether the deed of trust or mortgage of the railroad company, executed in 1853, is a valid security, not merely for the bonds therein described, but for the interest-coupons that fell due in May and November, 1874, and which are now held by Alexander Duncan. Assuming that the question is properly before us, we proceed directly to consider it. On the part of the appellants, it is claimed that the coupons were paid when they became due, or, secondly, if not, that Duncan, Sherman, & Co., and their assignee, Alexander Duncan, are estopped by fraud and breach of trust from setting them up as first mort-

gage liens, that is, as entitled to the benefit of the lien of the mortgage of 1853; and, thirdly, that the coupons, if not paid when they fell due, have since been paid to Duncan, Sherman, & Co., under a special appropriation of the net earnings of the railroad, which the firm diverted to other uses. This, it is said, appears from a proper marshalling of the assets of the railroad company.

On the other hand, Alexander Duncan, who obtained those coupons from Duncan, Sherman, & Co., denies that they were paid when they fell due, or have ever been paid. He denies that there is any estoppel, arising from fraud or breach of trust, against claiming the coupons to be entitled to the lien of the first mortgage. And he denies that there has been any misappropriation of the net earnings of the railroad company, which, under any proper marshalling of the assets, shows that the coupons were paid to the firm from which he obtained them. He insists that the coupons, instead of having been paid, became the property of Duncan, Sherman, & Co., either by purchase or transfer from the former owners, at or about the times when they fell due, and that he has succeeded to the rights of those purchasers. It is to the support of one or the other of these opposite averments of the parties that most of the evidence in this voluminous record has been directed.

If the coupons have not been paid in fact, or equitably by funds which Duncan, Sherman, & Co. should have appropriated to paying them, and if there be no estoppel against asserting them, it is not claimed that they are not protected by the mortgage as fully as the bonds from which they were taken.

What, then, is the evidence of actual payment? The coupons were produced uncancelled, and they were proved before the master appointed by the Circuit Court. If there were nothing else in the case, Alexander Duncan's possession of them would raise the presumption that he became the holder in the usual course of business, for value, at their date, and before they became payable. The appellees claim the benefit of this presumption; but it is completely rebutted by proof that neither Duncan, Sherman, & Co., nor Alexander Duncan, acquired any ownership of them before they fell due. We are then confined to a consideration of what occurred at that time and thereafter.

There are some things so clearly established by the evidence that they must be considered beyond doubt. They are these: —

1. Neither the coupons due in May, 1874, nor those due in November, 1874, were paid by the railroad company.

2. They were not paid with money or funds furnished by the railroad company.

3. They were not paid by any one in pursuance of an agreement with the railroad company to pay them for or on behalf of the debtors, or in extinguishment of the debt.

Thus far the evidence is full and uncontradicted.

4. Duncan, Sherman, & Co., who furnished the money which the former owners received for the coupons, did not intend to pay them in any such sense as to relieve the railroad company from its obligation. By advancing the money, and directing its payment to the holders of the coupons, they intended to take the place of those holders, and to become the owners of the evidences of the company's debt; or, in other words, they intended to obtain for themselves the rights of purchasers. They did not advance the money either to or for the company. Certainly, they did not intend to extinguish the coupons. Of this the evidence is very full. The firm had made advances to the company to pay the coupons due in November, 1873, as well as interest due in January and March, 1874, amounting to a very large sum. These advances had not been repaid when the May coupons fell due. Those coupons the company was then utterly unable to take up. In near prospect of this inability, William B. Duncan, the head of the firm, on the 28th of April, 1874, telegraphed from New York to the company at Mobile that his firm would purchase for their own account sterling coupons, payable in London. The firm also telegraphed to the Bank of Mobile and to the Union Bank of London to purchase the coupons there presented for them, charging their account with the cost, and transmitting the coupons uncancelled. The railroad company acceded to the proposition made them, and the Bank of Mobile and the Union Bank did also. Similar arrangements were made respecting the November coupons, except that Duncan, Sherman, & Co. arranged with the Crédit Foncier to make the purchase in London. Both these banks were agents of the firm in the transactions. They were not agents of the

railroad company. They had no funds of the company in hand. In taking up the coupons, they acted for Duncan, Sherman, & Co., charged the cost to their account, transmitted to them the coupons taken up without cancellation, and were repaid by them. In view of these facts, it is manifest that, whatever may have been the nature of the transaction by which the coupons passed from the hands of the former holders into the possession of Duncan, Sherman, & Co., it was not intended by the firm to be a payment or extinguishment of the company's liability. Neither they, nor the company, nor the Bank of Mobile, nor the Union Bank, nor the Crédit Foncier, so intended or understood it. Was it, then, a payment? It is as difficult to see how there can be a payment and extinguishment thereby of a debt without any intention to pay it as it is to see how there can be a sale without an intention to sell.

But that the coupons were either paid, or transferred to Duncan, Sherman, & Co. unpaid, is plain enough. The transaction, whatever it was, must have been a payment, or a transfer by gift or purchase. Was it, then, a purchase? It is undoubtedly true that it is essential to a sale that both parties should consent to it. We may admit, also, that "where, as in this case, a sale, compared with payment, is prejudicial to the holder's interest, by continuing the burden of the coupons upon the common security, and lessening its value in reference to the principal debt, the intent to sell should be clearly proved." But the intent to sell, or the assent of the former owner to a sale, need not have been expressly given. It may be inferred from the circumstances of the transaction. It often is. In the present case, the nature of the subject cannot be overlooked. Interest-coupons are instruments of a peculiar character. The title to them passes from hand to hand by mere delivery. A transfer of possession is presumptively a transfer of title. And especially is this true when the transfer is made to one who is not a debtor, to one who is under no obligation to receive them or to pay them. A holder is not warranted to believe that such a person intended to extinguish the coupons when he hands over the sum called for by them and takes them into his possession. It is not in accordance with common experience for one man to pay the debt of another, without receiving any

benefit from his act. We cannot close our eyes to things that are of daily occurrence. It is within common knowledge that interest-coupons, alike those that are not due and those that are due, are passed from hand to hand; the receiver paying the amount they call for, without any intention on his part to extinguish them, and without any belief in the other party that they are extinguished by the transaction. In such a case, the holder intends to transfer his title, not to extinguish the debt. In multitudes of cases, coupons are transferred by persons who are not the owners of the bonds from which they have been detached. To hold that in all these cases the coupons are paid and extinguished, and not transferred or assigned, unless there was something more to show an assent of the person parting with the possession that they should remain alive, and be available in the hands of the person to whom they were delivered, would, we think, be inconsistent with the common understanding of business men.

In the present case, there was much in the circumstances attending the transfer of the possession of the coupons from the original holders to Duncan, Sherman, & Co., or their agents, tending to show that those holders could not have believed the payment made to them extinguished the securities, so that they could not thereafter be set up by the transferees against the railroad company. Those circumstances, certainly, should have awakened their attention and led them to inquiry. The coupons were not paid in the usual manner, or at the usual place, or by the persons accustomed to pay them. Before May, 1874, the coupons paid at Mobile had always been paid at the office of the company by its officers, and had been left there. They had been paid, it is true, by checks drawn on the Bank of Mobile; but the holders had received those checks only on the delivery of the coupons to the company. In regard to the May and November coupons of 1874, this usage was changed. The coupons were not left at the company's office. They were taken there for verification, and then returned to the holders, with directions to take them to the bank, where they would be paid; but no checks drawn upon the bank were given to the holders. Some of them knew the company was not paying those coupons. Others inquired, and were told the bank would

purchase. Others did not know the company would not pay, and they made no inquiry. At the bank, the holders received the amounts due on the coupons, and left them in the possession of the bank: but, as they brought no checks, they must have known that the bank had no vouchers for its payments, unless the coupons continued in force in the hands of the new posses sors; and hence it is a fair presumption, that, when they delivered the possession, they assented to a transfer of ownership. They must have expected that the bank would hold the coupons as claims against the railroad company; and with that expectation they transferred them to the bank. What was that but tacit consent to a sale?

Similar remarks might be made respecting the coupons presented in London. On the 28th of April, 1874, Duncan, Sherman, & Co. sent a telegram to the Union Bank, requesting it to pay the May coupons for their account and forward them uncancelled. These instructions the bank followed. Parties who presented the coupons there received the amount, and handed over the security, so far as it appears without a word. Here, too, it is a reasonable presumption, that both parties supposed and expected that the coupons remaining uncancelled would be preserved, and held as claims against the railroad company.

The coupon-holders who presented their coupons in New York were informed that Duncan, Sherman, & Co. were purchasing them.

The manner in which the November coupons passed from the holders was not essentially different. There were, however, notices that the Bank of Mobile was purchasing them posted in the bank, and in the office of the railroad company. In London, they were taken by the Crédit Foncier, with which Duncan, Sherman, & Co. had arranged to purchase them; and notice of an intention to purchase was publicly given by the London house.

If, now, in addition to this, it be considered that none of the original holders of these coupons, with perhaps one exception (and he not an appellant), have hitherto denied the sale and purchase, and that not one has reclaimed the coupons and thus disaffirmed any sale, it seems to us a just conclusion, that they must be held to have assented to the purchase which was cer-

tainly intended by those who gave them the money and thereby acquired the possession.

It is argued, however, by the appellants, that Duncan, Sherman, & Co., and, consequently, Alexander Duncan, their assignee, are estopped from claiming that the May and November coupons are unpaid. Precisely wherein this alleged estoppel consists, we are unable to discover. It is said, that setting up the coupons now as an existing claim, entitled to the protection of the mortgage of the railroad company, is a fraud upon the bondholders secured by it. This we cannot see. If the original holders of the May and November coupons had sold them to some one else than Duncan, Sherman, & Co., it could not be doubted those vendees would have an unimpeachable right, equal at least to the right of the bondholders. Such a sale would have worked no injury to the bondholders of which they could complain. They are in no worse condition now than they would have been in the case supposed. If there be any difference between that case and the present, it must be found in the relation William B. Duncan, and the firm of which he was a member, held to the railroad company and to its creditors. The firm had been financial agents of the company, and Duncan had been a director several years. In April, 1874, he was elected its president. It was his duty, therefore, to have regard for the interests of the company, its stockholders, and, measurably, of its creditors. He was bound to entire good faith. This may be conceded. But was it unfaithfulness to the company, or to the bondholders of the company, to purchase either the bonds or the coupons falling due, which the company was unable to pay as they fell due? Was it unfaithfulness thus to save the company from going into immediate bankruptcy? This cannot be maintained. Subsequent events may show that it would have been better for the bondholders had the May and November coupons been suffered to go to protest, or had the company acknowledged publicly its inability to pay them when they fell due, though it is not proved that it would have been better. But the duty of Duncan was to do what in his judgment at the time was the best thing for all persons for whom he was a trustee. It surely was not his duty to permit the coupons to go into default. Still less, as it

appears to us, was it a breach of trust in him to purchase the coupons and hold them, in order that the company might have time to provide for their payment. The company was informed of his intention to make the purchase, and its consent was given. It can, therefore, make no claim that Duncan, Sherman, & Co. are estopped from asserting that they acquired possession of the coupons by purchase; and the company makes no such assertion. The bondholders under the first mortgage, or rather a very small number of them, however, do. They say, had the coupons not been purchased, had the company been known to have defaulted upon them, the trustees in the mortgage might have taken possession of the railroad, for the benefit of the bondholders. Hence they say they were injured by the purchase, if there was one. But, as we have said, they would have been equally injured if the purchase had been made by a stranger. There would have been no estoppel against a stranger. And William B. Duncan can be in no worse position, unless it be shown that he was guilty of bad faith in making the purchase through his firm.

Moreover, it is necessary to notice who sets up this plea of estoppel. An estoppel *in pais* does not operate in favor of everybody. It operates only in favor of a person who has been misled to his injury, and he only can set it up. If, therefore, there be any estoppel in this case, it must be in favor of some bondholder (if any there was) who was led to believe, by the action of William B. Duncan, that the railroad company was, in May and November, 1874, paying the coupons of the first mortgage, then falling due, and paying them in order to extinguishment; but no such bondholder asserts such an estoppel. So far as it appears, no one of the appellants was so misled. No one of them can claim an estoppel which is personal, and of which only the person misled to his hurt can avail himself. Indeed, it does not appear that any one of the witnesses (very few in number) who supposed the coupons were being paid when they received their money from the Bank of Mobile, was at the time, or is now, the holder of a single first-mortgage bond. Nor is there a single coupon-holder who now claims that he was misled or deceived by any of Duncan, Sherman, & Co.'s agents, by the Bank of Mobile, or the Union Bank of London, or by

the Crédit Foncier. It is impossible, therefore, to see how there can be any estoppel, or wherein can be found any fraud in purchasing the coupons.

The appellants have expended much argument to show that Duncan, Sherman, & Co., and Alexander Duncan, their assignee, are not entitled by subrogation to any rights of the persons who transferred to them the possession of the coupons. This may be admitted; but the argument is inapplicable to the case. Subrogation is an equitable right. The right claimed here is a legal one, obtained by transfer of the coupons, as distinguished from payment. Numerous authorities have been adduced to maintain that there is no right of subrogation. They are all wide of the mark. The case of *The Union Trust Company of New York* v. *The Monticello & Port Jarvis Railroad Co.* (63 N. Y. 311) is the one principally relied upon. There it appeared that one Smith had made an agreement with a railroad company to advance the money to pay coupons on the company's bonds when they should become due, holding the coupons for security. In pursuance of this agreement, he went to the plaintiff, where the coupons were payable, and left with it the money to pay the coupons when presented; it agreeing with him to take and deliver them to him uncancelled, that he might hold them as security for the money advanced. It was held that Smith was not entitled to share ratably in the proceeds of the mortgage to secure the bonds and coupons with other bond and coupon holders; but in that case the money was substantially advanced to the company, and the coupons were paid by it through its agent at the place where they were payable. The coupons were paid with money advanced to the company, and under an agreement to make such an advance to pay. These coupon-holders had a right to conclude that the money was paid by their debtors. We gather the facts from the opinion of the court. The case, therefore, bears very slight resemblance to the present. It was not a case of subrogation; nor was it a case of purchase or transfer: it was a case of agency for the debtor.

It is next contended by the appellants that, even if Duncan, Sherman, & Co. did become the owners of the coupons, by purchase or transfer, the firm received from the railroad company sums of money sufficient to pay what had been paid for the

coupons, and which it ought to have applied to their extinction. This raises a question of appropriation. The facts exhibited by the evidence are these: When, in April, 1874, William B. Duncan became the president of the railroad company, his firm was a large creditor of the company for money lent, and for advances made to pay the interest of the first-mortgage bonds due in 1873. And there was then a large floating debt, amounting, at the beginning of 1874, to about $1,500,000. Of this floating debt, nearly $200,000 were due to his firm, more than three-quarters of which consisted of a temporary loan made to the company, to enable it to pay its interest and meet its current liabilities. At the same time, the May interest on the first-mortgage bonds was about coming due, and the company had no means to meet it. In these circumstances, the board of directors of the company, on the 28th of April, 1874, in the absence of Duncan, passed the following resolution:—

"*Resolved*, that the net earnings of the company, after payment of the current expenses, be pledged for repayment of advances obtained by the president, for the purpose of meeting the May interest; and that the floating debt, in the shape of bills payable, be extended, so far as practicable, to next winter; and that credits so extending shall be secured by pledge of consolidated bonds in the hands of Bank of Mobile, or at such other bank or place as may be determined by the vice-president, in trust, at the rates of seventy-five cents."

This, it is contended by the appellants, was a specific appropriation of the net earnings of the road to the payment of the May interest, which the president was bound thus to appropriate, in preference to paying the floating debt, or any thing except current expenses. Whether it was or not, we will presently consider.

The net earnings of the road during the year 1874 (assuming that they all went into the hands of Duncan, Sherman, & Co.), together with the proceeds of sales of company-bonds, amounted to about $800,000. The annual interest of the company's bonds was considerably more than that sum. But it was necessary to keep the floating debt afloat; and that could be done only by partial payments and renewals, and by pledging collaterals.

Had that debt not been kept afloat, the company must at once have suspended operations and ceased making earnings. Accordingly it was reduced and extended. It was reduced over $280,000 during the year; and included in the reduction was a payment of $150,000 to Duncan, Sherman, & Co., to reimburse their temporary loan, and some $24,000 more on their general account; leaving still some $17,000 due to them beyond what was due on the May and November coupons they had purchased. The remainder of the net earnings was used to pay overdue coupons of the previous year, interest on the floating debt, interest on the company's convertible and other bonds, claims in judgment, and other pressing liabilities. All the resources of the company were thus disposed of.

It is obvious, therefore, that in the latter part of April, 1874, unless the company could be relieved from immediate demand for payment of the May coupons, it would be in the power of its mortgage creditors to take possession of the road and force a foreclosure. And unless the floating debt could be taken care of, for which reliance must be placed mainly on the future net earnings, equal disaster might be expected from that direction. It was when the company was in this condition the resolution of April 28, 1874, was passed. It contemplated the possibility of obtaining advances to the company in order to meet the imminent claims for payment of the coupons, and it offered a pledge of net earnings as a security for such advances or loans to the company. But no such advances or loans were made by anybody. They had been made the year before; but none were made or agreed to be made to enable the company to pay the May interest. There never came into existence, therefore, any debt for which the earnings were pledged by the resolution. And, even if the purchase of the coupons by Duncan, Sherman, & Co. could be considered advances to the company to enable it to pay the coupons, the pledge made by the directors' resolution was not a pledge to the coupon-holders. It was a pledge for the benefit of the firm, which it was competent for the firm to forego without losing its claim as transferees of the coupons upon the railroad company.

There was, then, no misappropriation of the company's funds by William B. Duncan, — no payment by him of which either

the company or the bondholders have any reason to complain. And there is no foundation for the claim now made, that the payments out of the net earnings, applied to the payment of coupons of former years, to the reduction of the floating debt, and to the satisfaction of interest upon it, should have been made in discharge of the May and November coupons.

The exact net earnings of the year 1874, as it appears from the report of the directors for that year, was $707,865.04. These were disposed of as follows: —

1. Paid interest-coupons matured in 1872 and 1873 .	$139,296.35
2. Interest-coupons matured in 1874, none of them those of May and November	197,970.70
3. Interest paid to secure renewal of floating debt and to prevent proceedings against the company on the part of the holders	118,346.97
4. Paid on account of floating debt to prevent sacrifice of securities belonging to the company	281,948.85
Total	$737,562.87

In view of this, it cannot be maintained, either that the coupons of May and November, transferred to Duncan, Sherman, & Co., were paid, or that, in obedience to any rule of law or equity, the net earnings of the road should have been applied in payment of them. They are, therefore, existing liabilities of the railroad company, and protected by the first mortgage.

But we think they have no equity superior to that of the bonds from which they were taken, or the subsequently maturing coupons. The mortgage was given as a security for the principal of the bonds as well as the interest, with no priority to either. The coupons are mere representatives of the claim for interest. The obligation of the debtor evidenced by them cannot be higher, nor entitled to greater privileges, than it would be had the bonds, in their body, undertaken the payment of interest. Cutting them from the several bonds of which they were a part, and transferring them to other holders, can give them no increased equities, so far as we can perceive. Had they been assigned with a guaranty of payment, it may well be they would be entitled to payment before the assignors could claim the fund. Then they might have an

equity to prior payment growing out of the guaranty. But there was no such undertaking of the assignors in this case. A mere transfer or assignment does not import a guaranty. At most, it warrants title, not solvency of the debtor, or collectibility of the chose assigned. A transfer or assignment of a claim, or part of a claim, secured by a mortgage given to protect that claim, in common with other claims contemporaneously originating, would seem to refer the transferee to the common security, and measure his rights and equities by that. It is in vain to urge that as between the person transferring and the transferee there is an equity, or even moral obligation, if it was the intention of the parties to participate, "*pari passu*," in the proceeds of the property pledged as a security. And such an intention may well be inferred from an assignment or transfer without guaranty. The meaning of such a transfer without more is that the transferee takes precisely the rights of the person from whom he obtains his title, and no more. But certainly such a transfer cannot have the effect of giving to the transferee greater rights than those created by the mortgage. *Dunham* v. *The Cincinnati, Peru, &c. Railway Co.*, 1 Wall. 254; *Gordillo* v. *Wiquetin*, L. R. 5 Ch. 287.

The mortgage in this case secures no priority to the coupons past due, nor to those first due. It places all bondholders and coupon-holders on the same level. It requires the trustees, in case of a sale, to apply the residue of the proceeds, after deducting costs, charges, &c., "to pay the principal and interest which may be due on the bonds issued," as recited, rendering the balance, if any, to the company, plainly meaning that the bonds and interest due (that is, owing or contracted to be paid) are to share in the application. By the terms of the mortgage the holders of the coupons of May and November, 1874, are therefore to have no preference over the bondholders and other coupon-holders.

We concur, therefore, in the decree of the Circuit Court, so far as it determined the priorities of the parties.

It remains only to consider the terms of the sale ordered That a sale was properly directed, rather than a strict foreclosure, is quite evident. It was the object of all the consolidated bills to procure a sale; and, if there was not assent by all

parties, there was at least no objection to it. A strict fore closure would not have converted the property into money. It would, in fact, have required the creditors to advance more funds to pay the costs and expenses. This no bondholder could justly require from his associates. Besides, a strict foreclosure would not be a winding up of the matter. It would leave an undivided beneficial interest in an unmanageable property in the hands of a large number of persons, who are very likely to disagree in regard to its use. The same observations might be made respecting a purchase by a trustee for the benefit of all the lien creditors. Such a purchase would convert them all into tenants in common, and probably give rise to endless discussion. Assuming that it was competent for the court, on bills praying for a sale and payment thereby of debts due, to compel creditors to take, in lieu of their personal rights, undivided interests in realty, which may be doubted, what could the trustee do after he had become the purchaser? Could he operate the railroad, at his discretion, through four States and in as many jurisdictions? Or would the court have placed the property again in the hands of a receiver? If so, what progress would have been made in securing payment of the creditors' bonds? What advance from the position in which the creditors now are, since the road is now in the hands of a receiver? It is too plain for any further comment that neither a strict foreclosure, nor a purchase by a trustee to buy, would have been for the interest of any bondholder.

The main objection to the terms prescribed by the Circuit Court for conducting the sale ordered, appears to be that they give superior advantages to some of the bond and coupon holders. The masters appointed to make the sale were, by the decree, required to exact from any bidder, before making an adjudication to him, a deposit of $50,000 in money, to pay costs and expenses, and a further deposit of $100,000 in money, or of the bonds or coupons described in the deed of trust and master's report, as a part of the debt secured by the deed. The decree further ordered that the masters might receive, in payment from the highest and last bidder, bonds and coupons which form a part of the first-mortgage debt ascertained to be due or owing by the master in his report, and sustained by the

opinion of the court; "provided, however, that a sum sufficient to pay the costs, charges, and expenses of the trust as above mentioned, whether exceeding the said cash deposit or not, and also to provide for the payment of the *pro-rata* dividend which shall be due or owing to the owners of other bonds and coupons secured under the deed of trust, must be paid in money, and provided also, that if the said mortgage property shall be bid off, directly or indirectly, by, for, or in behalf of the bondholders and creditors who have or shall have entered into and subscribed the agreement for the readjustment of the securities of said company, dated Oct. 1, 1876, commonly called the agreement of reorganization, then and in that case all and every bondholder and creditor of said company not having already entered into and subscribed said agreement, who shall, on or before the first day of September next, enter into and subscribe the same, and deposit their securities with the Farmers' Loan and Trust Company, in the city of New York, or with the Bank of Mobile, in the city of Mobile, as provided by said agreement, shall be, and they are hereby, allowed to participate in said bid and purchase, on the same terms, and on an equal footing in all respects, according to the character of their claims respectively, with the said bondholders and creditors who have heretofore entered into and signed said agreement."

It is said this enables those who have subscribed to that agreement, and who are a large majority of the bondholders, to purchase on paying a much less sum in money than would be required of other bondholders who have not signed the agreement. This is true; but we do not perceive that it is inequitable. After all, it makes no distinction against the minority which they have not themselves made by failing to secure a majority of the bonds. They are as much entitled to use their bonds in payment as any other bondholders are. It is their misfortune if they have not as many bonds as others have. They have no equity to cast their misfortune upon those who own more bonds than they do. Permission to bondholders who are mortgagees to purchase at a sale of the mortgaged property and to pay by their bonds is not only usual, but it is highly advantageous to all persons who have an interest. It tends to enhance the price which may be obtained, and thus

benefits other creditors as well as the mortgagor. That large bondholders have an advantage over small ones, in that they are required to pay less in money, may be true; but it is an advantage they purchased when they obtained their bonds, of which it would be inequitable to deprive them. Such an advantage is everywhere recognized and protected,—notably in partition suits, and in sales of the assets of a partnership, as well as in many sheriffs' sales. Had there been but two creditors of the railroad company,—one holding $10,000,000 of the company's mortgage bonds, and the other $100,000,—it would be strange indeed if the former, buying at a foreclosure sale, might not pay with his bonds that proportion of his bid which would come to him; paying the rest in money, because the latter would be obliged to pay more in money if he had become the purchaser. The minority holder has no such equity to control the sale. The case supposed is in principle the one we have before us; for it is not to be doubted that creditors of a common debtor may combine to purchase the debtor's property at a judicial sale, though they may not combine to prevent others from purchasing. The decree now complained of puts no obstacle in the way of a purchase by the appellants; nor does the agreement of Oct. 1, 1876.

It follows from what we have said that neither of the appeals can be sustained.

It is ordered that the appellants in the first case pay all costs of their appeal, except the costs of the *certiorari* and return; including the printing thereof and the clerk's fees for copying, which the appellees are ordered to pay.

It is further ordered that Henry Jump, one of the appellants, shall not be charged with any costs that may have accrued since April 1, 1878, when he moved to withdraw his appeal.

And it is further ordered that the costs of the appeal in the second case be paid by the appellants.

Decree affirmed.

MR. JUSTICE CLIFFORD, with whom concurred MR. JUSTICE SWAYNE, MR. JUSTICE MILLER, and MR. JUSTICE HARLAN, dissenting.

I am of opinion that the coupons which are by this decree

held to be a lien on the road were extinguished by payment; that the holders of them, who presented them for payment at the several places to which they were directed, had no thought of selling them, and, in fact, did not sell them, and, therefore, in law they were paid, and not sold.

I also believe that the attempt of Duncan, Sherman, & Co. to take up these coupons without paying them was deceptive and collusive, and was dictated by their interest in concealing from the public the fact that the railroad company was unable to meet those payments.

COUNTY OF RAY v. VANSYCLE.

Pursuant to a power conferred in the charter of A., a railroad company, a county court of Missouri subscribed, in the year 1860, for stock, and agreed to issue county bonds in payment therefor. Under the authority of an act of the General Assembly of that State, passed in the year 1864, A., by a vote of a majority in interest of its stockholders, said county court voting with said majority, transferred all the assets, rights, and privileges of its charter, and all the work done thereunder, to a company, B. C. was, under the general railroad law, organized as a corporation for constructing a railroad which passed through the county, and an agreement was made, in 1868, between B., C., and the county court, by which the subscription was released; and, in consideration of such release, that court subscribed for the same amount of stock in C., and issued county bonds in payment therefor. The county, by this arrangement, secured, with increased railroad facilities, a road in all material respects the same as that desired and originally contemplated; and it received and still retains the requisite certificates of stock. The county court levied and collected the tax to pay the interest due on the bonds for the years 1869, 1870, 1871, 1872, and 1873; but, in August of the last-mentioned year, directed that the payment of the interest thereunder should be withheld. Suit was brought against the county by a *bona fide* holder of the coupons, who purchased the same for value before their maturity. *Held*, 1. That B. acquired a vested right to demand and receive the bonds of the county, in payment of the original subscription to A.; and that such right was not defeated or impaired by the Constitution of Missouri of 1865. 2. That the agreement made in 1868 is not, as against such holder, subject to the objection that a majority of the qualified voters of the county had not, at a general or special election, expressed their assent to the subscription of stock in C. 3. That the tax-payers are concluded by the act of the county court, and by their own failure to assert, by appropriate proceedings, their legal rights, if any they ever had, to prevent the transfer of the original subscription from one company to the other.

ERROR to the Circuit Court of the United States for the Western District of Missouri.

This was an action by Vansycle to recover the amount due on interest coupons attached to bonds which were issued in 1869 in the name of the County of Ray, Missouri, by each of which it acknowledged itself indebted to the St. Louis and St. Joseph Railroad Company in the sum of $1,000; which it promised to pay to that company or bearer, at the American Exchange National Bank in New York, on the first day of January, 1879, with eight per cent interest, payable annually, upon the presentation and delivery of the coupons.

Each bond contained these recitals: —

"This bond being issued under and pursuant to an order of the county court of Ray County, made under the authority of the Constitution of the State of Missouri and the laws of the General Assembly of the State of Missouri, and authorized by a vote of the people of said county, at a special election held for that purpose.

"In testimony whereof the said county of Ray has executed this bond, by the presiding justice of the county court of said county, under the order of said court, signing his name thereto; and by the clerk of said court, under order thereof attesting the same, and affixing thereto the seal of said court. This done at the town of Richmond, county of Ray, aforesaid, this second day of ——, 1869.

[L. S.] "C. W. NARRAMORE,
"Presiding Justice of the County Court of Ray County, Missouri.

"Attest: GEO. N. MCGEE,
"Clerk of the County Court of Ray County, Missouri."

The coupons were in the form following: —

"RICHMOND, RAY COUNTY, MISSOURI, A.D. 1869.

"The county of Ray acknowledges to owe the sum of eighty dollars, payable to bearer on the first day of January, A.D. 1874, at the American Exchange National Bank in New York, for one year's interest on bond No. ——.

"GEO. N. MCGEE,
"Clerk of County Court of Ray County, Mo."

Vansycle was a lawful holder for value of the bonds, and received them without actual notice or knowledge of any defects or irregularities in their issue.

The main facts connected with the issue of the bonds cover

a period of more than ten years, commencing with the year 1859.

An act of the General Assembly of the State of Missouri, approved Dec. 5, 1859, and amended Jan. 5, 1860, incorporated the Missouri River Valley Railroad Company, with power to construct a railroad from any point on the North Missouri Railroad in Randolph County, by way of Brunswick, in Chariton County; thence, through Carroll, Ray, Platte, and Clay Counties, to Weston, in Platte County; and authorized the county court of any county in which any part of such railroad might be, to subscribe to the stock of the company, invest its funds in such stock, and raise the funds by tax to be voted by the legal voters of the county, in such manner as the county court might prescribe for the purpose of paying such stock. It declared that the provisions of the general railroad law of Missouri, not inconsistent therewith, should be extended to that company.

The general railroad law of Missouri then in force made it lawful for the county court of any county to subscribe to the capital stock of any railroad company duly organized in Missouri, and, for information, to cause an election to be held to ascertain the sense of the tax-payers of such county as to such subscription, and as to whether the same should be paid by issuing county bonds or by taxation. A county, upon its making such subscription, became, like other subscribers to stock, entitled to the privileges granted, and subject to the liabilities imposed, by that law, or by the charter of the company to which such subscription was made. In order to raise funds to pay the instalments which might be called for from time to time by the board of directors of such company, it was made the duty of the county court to issue the bonds of the county, or levy a special tax upon all property taxable by law for State and county purposes, &c.

By an act approved March 30, 1860, amendatory to that of Dec. 5, 1859, and for other purposes, the county courts of Ray and other counties specifically named were authorized to issue and deliver the bonds of their respective counties in payment of any subscription to or purchase of the capital stock of the Missouri River Valley Railroad Company which such counties might respectively make; the bonds to be in the sum of not

exceeding $1,000 each bond, having not exceeding ten years to run before maturity, bearing interest at the rate of eight per cent per annum, payable annually at the county seat of the county issuing them, or in the city of St. Louis, as the county court might prefer.

On the 2d of July, 1860, the Ray county court, by an order entered upon its records, directed a vote of the people to be taken on the 13th of August, 1860, on the question whether the county should take $200,000 of stock in the Missouri River Valley Railroad Company, upon the following conditions: That all of said county stock shall be expended on that part of the railroad in that county; that said subscription shall be payable in county bonds, to run ten years, bearing interest, to be paid annually, at the rate of eight per cent; and that no bond shall be issued or delivered to said company until provision shall be made for building the railroad to the eastern boundary of the county.

At an election held, as ordered, one thousand three hundred and thirty-seven votes were cast in favor of the subscription, and six hundred and twenty-three votes against it. The records of the county court state that the vote cast for the subscription was by "a majority of the people and tax-payers of the county of Ray." The court appointed agents to subscribe and vote the stock upon the conditions mentioned in the order. Such subscription was legally made.

An act of the General Assembly, approved Feb. 10, 1864, the provisions of which were accepted by the North Missouri Railroad Company, provided that the Chariton and Randolph Railroad Company and the Missouri River Valley Railroad Company might, by a vote of a majority of their stockholders in interest, transfer and assign to the North Missouri Railroad Company all of their effects, assets, rights, and privileges, under their charters, and all the work that had been done in the construction of their respective roads. The two companies, when the authorized transfer by them made should be accepted by the North Missouri Railroad Company, were to cease to have any corporate existence, and to be styled and known thereafter as the West Branch of the North Missouri Railroad. The act declared that said west branch should commence at the town

of Moberly, in the county of Randolph, on the North Missouri Railroad, and extend west along the route adopted by the Chariton and Randolph Railroad Company, to the city of Brunswick; thence on or near the survey of the Missouri Valley Road to Richmond, in Ray County; and thence, by the most advantageous and practicable route, to some point on the north side of the Missouri River, at or below St. Joseph. The act also provided that all the franchises vested in the Chariton and Randolph Railroad Company and the Missouri Valley Railroad should become, by such transfer and acceptance, fully and completely vested in the North Missouri Railroad Company.

The county court of Ray, at its April term, 1864, appointed agents to vote two thousand shares of stock in the then approaching election for directors of the Missouri River Valley Railroad Company, with instructions also to vote in favor of transferring and assigning to the North Missouri Railroad Company all the effects, assets, rights, and privileges of the Missouri River Valley Railroad Company, and all the work done upon the Missouri River Valley Railroad, as provided in the act of Feb. 10, 1864. The agents thus appointed reported to the court, at its July term, 1864, that in accordance with instructions they had cast the vote of the county. Their report was approved, and ordered to be filed and recorded.

On the 13th of December, 1866, a written agreement was made between the North Missouri Railroad Company and the county court; which provided, among other things, that the company, for the consideration of $150,000 to be paid in the bonds of Ray County, should build, run, and operate its west branch to the city of Richmond, in that county, by a spur of said west branch, and complete the connection within ninety days after the main or straight line of the west branch should be completed to a point opposite Richmond. It is not necessary to set out that agreement. It is sufficient to say that it secured to the county all the railroad facilities which it would have received had the main line of the west branch passed in the immediate vicinity of the city of Richmond; and, in consideration of its consenting to accept the building, operating, and running of said west branch, as thereby provided, and releasing

the North Missouri Railroad from its former obligations, the latter agreed to release the county from the sum of $50,000 of the stock theretofore subscribed for the construction of the said west branch of the North Missouri Railroad. The company agreed to build and construct the spur branch or connection from the main line "to the said city of Richmond aforesaid, so far as the grading is concerned, when said county of Ray issues its bonds for the said sum of $150,000 to said North Missouri Railroad Company, so that it may be ready for the iron by the time the said west branch of said North Missouri reaches a point opposite the said city of Richmond." This agreement was promptly ratified of record, and signed by the justices of said court, with the seal of the county affixed. An order was at the same time made upon the records of the court, directing that bonds of the county amounting to $150,000 be issued "according to the orders of the county court of said county of Ray heretofore made and the stipulations of this contract."

At the same term of the court an agent was appointed to vote the county stock at the next election of directors for the North Missouri Railroad Company.

In January, 1868, the St. Louis and St. Joseph Railroad Company was organized, under the general railroad law of Missouri, for the purpose of constructing and operating a railroad through Ray, Clinton, and Buchanan Counties, from a point on the west branch of the North Missouri Railroad, at Richmond, by the most practicable route, through Plattsburg, to the city of St. Joseph.

On the 15th of April, 1868, the North Missouri Railroad Company authorized its president and executive committee to make such contracts with the St. Louis and St. Joseph Railroad Company, to aid in building the latter road, as might be consistent with the interest of the former company; and also "to release the county of Ray from its subscription of $200,000 to aid in building the west branch of the North Missouri Railroad, upon the condition that this (the North Missouri) company is released from constructing a spur from the west branch to Richmond; and also upon the further condition, that Ray County will subscribe $250,000 stock, and secure the same, to

be paid towards the building of the St. Louis and St. Joseph Railroad."

This proposition was submitted to the county court and rejected. That court, however, on the 19th of May, 1868, entered of record an order from which the following is an extract: "In order that said $200,000 may be applied to the purpose and object of constructing a railroad from the west branch of the North Missouri Railroad, through the city of Richmond, in said county of Ray, to St. Joseph, it is, therefore, ordered by the court that the said sum of $200,000 be, and the same is hereby, transferred to the St. Louis and St. Joseph Railroad Company, to be applied in building, constructing, and operating that portion of the St. Louis and St. Joseph Railroad in Ray County, north of the west branch of said North Missouri Railroad, upon the following express conditions," &c. These conditions provided that the county should be released in writing from its subscription of $200,000 to the North Missouri Railroad Company; that, upon the filing of such release in the proper office, the presiding justice should subscribe the sum of $200,000 as stock in the St. Louis and St. Joseph Railroad Company; that bonds for that amount should be issued to the company, $50,000, when the court was satisfied that five miles of the road in Ray County, north of the west branch of the North Missouri Railroad, and beginning at the said branch, was under contract, and for the building of which the bonds and their proceeds were to be applied; and $50,000 as each additional five miles of the road was graded and ready for the ties, and not then unless the court should be satisfied that all the bonds previously issued had been properly applied.

In accordance with this order, the North Missouri Railroad Company, by its president, executed in June, 1868, and filed for record, its written release to Ray County of the latter's subscription to it of $200,000; "the consideration of this release being the entire cancellation of the existing contracts between the county of Ray and the North Missouri Railroad Company, and also the subscription by the county of Ray to the capital stock of the St. Louis and St. Joseph Railroad Company."

No election was held at which the citizens of the county voted in favor of a subscription to the capital stock of the St. Louis and St. Joseph Railroad Company; but, before the court made the order of May 19, 1868, it received the petition of from twelve hundred to fourteen hundred citizens of the county, asking it to transfer its subscription to the St. Louis and St. Joseph Railroad Company.

At the November term, 1868, of the court, an order was made and complied with, directing that $50,000 of the county bonds be issued to the St. Louis and St. Joseph Railroad Company; $50,000 more of them were directed by the court, at its September term, 1869, to be issued; and $50,000 additional, at its November term, 1869. The last $50,000 of the bonds were issued in pursuance of an order entered at its February term, 1870. None of them were delivered until after satisfactory proof had been made of the construction of each five miles of road, as stipulated in the agreement of the parties. The county received and still retains the requisite certificates of stock in payment for which the bonds were issued.

Sect. 14, art. 11, of the Constitution of Missouri ordains that "the General Assembly shall not authorize any county, city, or town to become a stockholder in, or to loan its credit to, any company, association, or corporation, unless two-thirds of the qualified voters of such county, city, or town, at a regular or special election to be held therein, shall assent thereto."

In pursuance of that constitutional provision, the General Assembly, by general statute, declared, that "it shall be lawful for the county court of any county, the city council of any city, or the trustees of any incorporated town, to take stock for such county, city, or town in, or loan the credit thereof to, any railroad company duly organized under this or any other law of the State; provided, that two-thirds of the qualified voters of such county, city, or town, at a regular or special election to be held therein, shall assent to such subscription."

The court below made a special finding, embracing the facts above set forth, and others stated in the opinion of this court, and rendered judgment in favor of the plaintiff. The county thereupon brought the case here by writ of error.

The case was submitted, on behalf of the plaintiff in error, by *Mr. Francis M. Cockrell*, on the brief of *Mr. William S. Everett*, who contended that

1. The county court had but a specially delegated authority, and could not subscribe for corporate stock, so as to bind the county, except with the assent of two-thirds of the qualified voters thereof, expressed in the mode prescribed. As no election was held or ordered, at which such voters, or any of them, had an opportunity of declaring their assent to the county subscription made in the year 1868, for stock in the St. Louis and St. Joseph Railroad Company, that subscription, and the orders for the issue of bonds in payment of it, were in manifest violation of the Constitution and the statutes of Missouri, the provisions whereof the plaintiff below was bound to take notice.

2. The county, in resisting a recovery upon the coupons, is not estopped from showing that the county court, by reason of the absence of a popular vote, had no jurisdiction in the premises; and that its orders were void, as unauthorized and prohibited acts.

3. The coupons are void in the hands of the plaintiff below, although he had no actual notice of the facts which establish their nullity. The records of the county court, in the matter of the subscription in question, furnish conclusive proof that the condition precedent to the lawful issue of the bonds had not been performed.

Mr. John B. Henderson, contra.

MR. JUSTICE HARLAN, after stating the facts, delivered the opinion of the court.

The first inquiry suggested by the facts set forth in the special finding is as to the validity of the agreement of 1868, whereby the county of Ray secured exemption from liability to the North Missouri Railroad Company, on its original subscription of $200,000, and the St. Louis and St. Joseph Railroad Company obtained the bonds of the county for that amount. This question must be determined in the light of all that occurred in connection with the efforts made to secure a railroad through that county.

It appears that, at the election held in the year 1860, more

than two-thirds of the votes cast in the county were in favor of a subscription of $200,000 to the capital stock of the Missouri River Valley Railroad Company, which proposed to construct a railroad through the county. The only condition which the voters imposed was, that the stock subscribed under the authority of that election "should be expended on that part of the railroad in the county of Ray." In obedience to the popular will, the subscription was made in that year. When, however, in 1864, that company transferred all its effects, assets, rights, and privileges to the North Missouri Railroad Company, the latter became entitled to the benefit of that subscription, and, in satisfaction thereof, to the bonds of the county, to the amount of $200,000. Of the validity of that transfer we have no doubt. It was authorized by an act of the General Assembly of Missouri, and made with the sanction of the stockholders of the companies interested, including the county. At the meeting of stockholders called to consider the question of transfer, the county was represented by an agent, designated by the county court, with specific instructions to vote the stock of the county in favor of such transfer. In appointing that agent, with such instructions, the court did not exceed its powers; since, by the terms of the act of Dec. 5, 1859, under the provisions of which the original subscription was made, the court was authorized "to take proper steps to protect the interests" of the county, and also "to appoint an agent to represent the county, to vote for it, and to receive its dividends." It seems, therefore, entirely clear that the North Missouri Railroad Company acquired, prior to the adoption of the State constitution of 1865, a vested right to demand and receive the bonds of the county in payment of its original subscription. This right was not destroyed or impaired by that constitution. It has been decided by the Supreme Court of Missouri, that the section of the constitution of that State relating to municipal subscriptions was "a limitation upon the future power of the legislature, and was not intended to retroact so as to have any controlling application to laws in existence when the constitution was adopted." *State, &c.* v. *Macon County Court*, 41 Mo. 453; *State, &c.* v. *Greene County*, 54 id. 540; *The State, ex rel. &c.* v. *The County Court of Sullivan County*, 51 id. 522; *County of Callaway* v.

Foster, 98 U. S. 570; *County of Scotland* v. *Thomas*, 94 id. 688; *County of Henry* v. *Nicolay*, 95 id. 619.

But the North Missouri Railroad Company, for some unexplained reason, did not proceed in the construction of the contemplated road. Counsel do not, however, claim that its delay in that regard worked a forfeiture of its right to the bonds of Ray County, at the time of the organization, in the year 1868, of the St. Louis and St. Joseph Railroad Company. The latter had in view the construction of a road from some point on the west branch of the North Missouri Railroad, at Richmond, the county seat of Ray, to the city of St. Joseph, — in all material respects, the same road for the construction of which the county had previously contracted with the North Missouri Railroad Company. At this crisis, the latter company, having perhaps a pecuniary interest in establishing a connection between its west branch and the city of St. Joseph, proposed to release the county from its subscription of $200,000, if it would subscribe $250,000 to the capital stock of the St. Louis and St. Joseph Railroad Company. Declining to assent to that arrangement, the court, on behalf of the county, made a counter-proposition; to wit, that, for the purpose of constructing a railroad from the west branch of the North Missouri Railroad, through Richmond to St. Joseph, it would transfer the $200,000 subscription to the St. Louis and St. Joseph Railroad Company, by making a similar subscription to that company, to be applied in building, constructing, and operating such road, provided the county was released, in writing and of record, from all liability upon its original subscription to the North Missouri Railroad Company. This proposition was promptly acceded to by both companies. The required release was executed and put upon record; and the St. Louis and St. Joseph Railroad Company entered upon the construction of, and did construct, the proposed road; receiving the bonds of Ray County in sums of $50,000, as each five miles of road was completed, and faithfully applying the proceeds to that portion of the road which was in that county.

We are now asked to declare that the county is under no legal obligation to pay its bonds, issued and put upon the market under the circumstances we have detailed.

The fundamental proposition underlying the defence is, that, after the adoption of the Constitution of 1865, no subscription of stock could be lawfully made by the county until after an election; and that, no election having been held at which the people voted specifically in favor of a subscription to the stock of the St. Louis and St. Joseph Railroad Company, the action of the court was a nullity, creating no liability whatever upon the bonds issued in pursuance of the agreement of 1868. Whatever weight that proposition might have in some cases, it does not meet the precise issues here presented. It ignores altogether the direct connection which existed between the agreement of 1868 and the action taken by the county and its court prior to the year 1865, whereby the county assumed the obligation to issue its bonds to the amount of $200,000, in discharge of a completed subscription to the stock of a corporation which came into existence and was fully organized before that constitution went into operation, and which could, notwithstanding the adoption of that instrument, compel the county to comply with its contract. It is the case of a transfer of such stock by exchange, in order that the county might obtain the desired road, and be discharged from legal obligations from which it could not justly or rightfully escape. It is not the case of an entirely new subscription, made under the Constitution of 1865, in disregard of its provisions and of the general statutes passed in pursuance thereof. When the arrangement of 1868 was first suggested, the court saw that the desire of its constituents for the construction of a railroad through the county was not likely to be fulfilled through the agency of, or under the contracts previously made with, the North Missouri Railroad Company. Its members became convinced that the only effectual or practicable mode to accomplish that end was to make such an arrangement or combination as that made with the new company. The court was given by the statute, under which the original subscription was made, the power to "take proper steps to protect the interests of the county;" to which end it was authorized to appoint an agent "to represent the county, to vote for it," &c.; and, in exercising this power, it was necessarily invested with very broad discretion. It is not an unreasonable construction of the statute to say that, in determining

what steps were proper for the protection of the interests of the tax-payers, the court had authority to adopt such measures as prudent men managing the affairs of others ought to have adopted. It evidently regarded the arrangement made in 1868 as essential to the protection of the county's interests, so far as they were involved in the subscription of stock previously made, and in the obligations thereby assumed. There is nothing in the record upon which to base any imputation of collusion or bad faith. The action was taken under such circumstances of publicity as to notify the tax-payers generally of all that was doing; and we are not prepared to say that the court had not the power to transfer the subscription from the North Missouri Railroad Company to the St. Louis and St. Joseph Railroad Company, and deliver the county bonds to the latter, upon its agreement to build substantially the same road for the construction of which the original subscription had been made.

But whatever doubt exists upon this point should be resolved in favor of the *bona fide* holders of the bonds. The tax-payers of the county should not, under the peculiar circumstances of this case, be now heard to allege that their agents, invested by statute with the authority and charged with the duty of protecting their interests, had exceeded their powers. The court levied and collected a tax to pay interest due on the bonds delivered to the St. Louis and St. Joseph Railroad Company for the years 1869, 1870, 1871, 1872, and 1873. The coupons were annually paid for the first four years named. It is true that, at a term of the court held in August, 1871, an order was entered of record, stating that the bonds had been issued illegally and were void, and upon that ground the order recited that neither the bonds nor the coupons would be paid by the county. But in March, 1872, that order was rescinded, and the county treasurer directed to proceed with the payment of the interest. It was not until August, 1873, that the court finally determined to repudiate all obligations to pay the bonds; and under its orders the interest collected for 1873 has been retained. It further appears from the special finding that the North Missouri Railroad Company constructed its western branch from Moberly to Kansas City, running through the

county for a distance of between twenty-six and twenty-eight miles; that the St. Louis and St. Joseph Railroad Company constructed its road from opposite Lexington through Richmond, locating a depot in Richmond, and continuing to the northwest boundary of said county, a distance of twenty-eight miles; that said road is completed and operated to the city of St. Joseph, Missouri; that on the first-named road there are four depots located in Ray County, and on the latter five depots; that the money realized from the sale of the bonds issued was expended in the construction of the St. Louis and St. Joseph Railroad, in the county of Ray, and, in consequence of this arrangement, the county secured the construction and operation, within its limits, of about twenty-four miles of railroad more than would have been built under the previous contract or arrangement with the North Missouri Railroad Company.

But this is not all. In payment of the county subscription and bonds, certificates of stock in the St. Louis and St. Joseph Railroad Company were issued to the county, and are still held by it. They have never been tendered for cancellation. When the court declared, in 1873, that the county would pay neither the principal nor the interest due on the bonds, no intimation was given of even its willingness to surrender the certificates.

Upon the clearest principles of justice, the tax-payers of Ray County are concluded by the acts of their official agents, and by their own failure, either intentionally or from neglect, to assert, by appropriate proceedings, their legal right (if any they ever had) to prevent the transfer of their original subscription to the company, which, by the construction of its road, gave them greater railroad facilities, and at no greater cost, than they could have obtained under the contract with the North Missouri Railroad Company.

Although this case has many features peculiar to it, the conclusion we have reached is in harmony with settled principles heretofore announced by this court in numerous cases.

It seems unnecessary to consider other points suggested in argument, as the views here expressed are sufficient to dispose of the case.

Judgment affirmed.

HAWKINS v. UNITED STATES.

1. A. agreed to furnish the United States a number of cubic yards of rubble-stone, for the construction of a public building under a contract which, after prescribing the dimensions of the material, and the price to be paid therefor, provided that no departure should be made from its conditions, without the written consent of the Secretary of the Treasury. Such consent was not given. The assistant superintendent, in charge of the erection of the building, declined to receive certain of the stones, although they were within the description of the contract; and required A. to furnish others of a different and more expensive kind, which the latter did. *Held*, that, as A. was bound to take notice of the fact that the assistant superintendent had no power to vary the contract, he is only entitled to recover according to its terms.
2. The question of agency discussed.

APPEAL from the Court of Claims.

The facts are stated in the opinion of the court.

Mr. Enoch Totten for the appellant.

Mr. Assistant-Attorney-General Smith, contra.

MR. JUSTICE CLIFFORD delivered the opinion of the court.

Verbal agreements between the parties to a written contract, made before or at the time of the execution of the contract, are in general inadmissible to vary its terms or to affect its construction, the rule being that all such verbal agreements are to be considered as merged in the written instrument. But oral agreements subsequently made, on a new and valuable consideration, and before the breach of the contract, in cases not falling within the Statute of Frauds, stand upon a different footing; as such agreements may, if not within the Statute of Frauds, have the effect to enlarge the time of performance, or may vary any other of its terms, or may waive and discharge it altogether. *Emerson* v. *Slater*, 22 How. 28; *Goss* v. *Nugent*, 5 Barn. & Ad. 58; *Nelson* v. *Boynton*, 3 Met. (Mass.) 396; *Harvey* v. *Grabham*, 5 Ad. & E. 61; *Leonard* v. *Vredenburgh*, 8 Johns. (N. Y.) 28; Chitty, Contr. (10th ed.) 105.

Authority was conferred upon the Secretary of the Treasury, by the act of the 10th of June, 1872; and he was therein directed to cause to be erected a suitable building at Raleigh, North Carolina, for the use and accommodation of the courts of

the United States, post-office, and other offices of the government, with fire-proof vaults extending to each story of the building. 17 Stat. 390.

Pursuant to that authority, the contract in question was made by the superintendent appointed for the purpose, with the plaintiff, to furnish and deliver, on the site for the building, one thousand cubic yards, more or less, of rubble-stone, on his bid for the same; it being covenanted and agreed between the parties that the "contract shall be valid and binding when approved by the Secretary of the Treasury, and not otherwise, and that no departure from its conditions shall be made without his written consent."

By the terms of the contract, the rubble-stone was to be in every way equal to the sample furnished with his bid: one-quarter to be bond-stones, of a length equal to the thickness of the walls, and to contain not less than ten cubic feet; and no stone to contain less than one and one-half cubic feet, or to be less than twelve inches thick, to be delivered at such times and in such quantities as may be deemed necessary by the superintendent. Monthly payments were to be made, as the work progressed, for ninety per cent of the stone delivered, at five dollars per cubic yard; it being stipulated that ten per cent should be retained until the completion of the contract and the approval and acceptance of the same by the superintendent.

Leave to amend having been granted, the petitioner enlarged his charge for work done, and claimed that there was a balance due to him of $8,962.50, after deducting cash paid, and the rubble-stone quarried and rejected before it was shipped. Hearing was had, and the court rendered judgment for the plaintiff in the sum of $1,566.50, as appears by the transcript. Immediate appeal was taken to this court by the plaintiff; and he assigned the errors following: 1. That the court below erred in the measure of damages which they adopted in the case. 2. That the court erred in not holding that the claimant is entitled to recover the fair value of the material delivered and accepted, without regard to the price prescribed by the contract. 3. That the court should have computed the stone furnished as nine hundred and fifty-eight and three-fourths cubic yards, at $12.50 per yard, as the value of the stone delivered.

Congress directed the Secretary of the Treasury to cause the building to be erected, and appropriated $100,000 to accomplish the object; the same act providing that the money appropriated should be expended under the direction of the Secretary, and that he should cause proper plans and estimates to be made, so that the whole expenditure for the construction and completion of the building should not exceed the amount of the appropriation. Neither limitations nor precautions are always effectual in such cases; and Congress, at the next session, found it necessary to make another appropriation of the same amount, for the same object: but the provision that the Secretary of the Treasury should cause the building to be erected, and that the money appropriated should be expended under his direction, was never repealed or modified. 17 Stat. 524; 18 id. 228.

Such being the state of congressional legislation, it necessarily follows that the contractor, as well as the superintendent, knew that the appropriations were to be expended by the Secretary, and that no one else was authorized to direct as to the character and construction of the building. Individuals as well as courts must take notice of the extent of the authority conferred by law upon a person acting in an official capacity; and the rule applies, in such a case, that ignorance of the law furnishes no excuse for any mistake or wrongful act. *State, ex rel. &c.* v. *Hayes*, 52 Mo. 578; *Delafield* v. *The State of Illinois*, 26 Wend. (N. Y.) 91; *The People* v. *The Phœnix Bank*, 24 id. 430; *The Mayor and City Council of Baltimore* v. *Reynolds*, 20 Md. 1; *Whiteside* v. *United States*, 93 U. S. 247.

Different rules prevail in respect to the acts and declarations of public agents from those which ordinarily govern in the case of mere private agents. Principals in the latter category are in many cases bound by the acts and declarations of their agents, even where the act or declaration was done or made without any authority, if it appear that the act was done, or the declaration was made, by the agent in the course of his regular employment; but the government or public authority is not bound in such a case, unless it manifestly appears that the agent was acting within the scope of his authority, or that he had been held out as having authority to do the act, or make

the declaration, for or on behalf of the public authorities Story, Agency, 307 *a; Lee* v. *Munroe*, 7 Cranch, 366.

Fifty cubic yards of rubble-stone were quarried, shipped, and delivered by the contractor soon after the contract was executed, which was rejected by the assistant superintendent of the work, and he refused to receive any of the same description. By the finding of the court, it appears that the rubble-stone rejected was such as came within the description and standard of the small-sized stone required by the contract, and that the assistant superintendent informed the claimant of the kind which must be furnished to make such a wall as he wanted; which was, in fact, what is called ranged-rubble or broken-ashlar stone, more expensive in kind than that described by the contract, and which would make a wall superior in appearance to that contemplated by the specifications. Two hundred and thirty cubic yards of rubble-stone had then been quarried by the claimant, and were ready for transportation and delivery. Wheeler, Civil Engineering, 209.

Throughout, the claimant maintained that he thought that the stone he had delivered was up to the contract: but he expressed the desire to furnish such material as would give perfect satisfaction to the government and their agents; and he quarried, transported, and delivered, within the period mentioned in the finding, nine hundred and fifty-eight and three-fourths cubic yards of ranged-rubble or broken-ashlar stone, different from that described in the contract, and worth $12.50 per cubic yard when delivered. These stones so furnished were cut, trimmed, and squared by the workmen, so as to fit the same for such a wall as the assistant superintendent desired to make, it appearing that one-fourth part of the measurement of the stone was lost by such fitting. Apart from that, the findings of the court also show that the market-value of the fifty cubic yards of the rubble-stone rejected, and of the two hundred and thirty cubic yards quarried and not shipped, was $456.80, which is nearly $350 less than the cost of quarrying the said quantity not shipped.

Tested by these considerations, it is clear that the measure of damages adopted by the Court of Claims is correct.

Three items were allowed to claimant, as follows: 1. For

nine hundred and fifty-eight and three-fourths cubic yards of stone delivered, at the contract price of five dollars per yard, less the amounts paid to him in the settlement of his account. 2. Forty-five cubic yards of rubble-stone delivered, and rejected by the assistant superintendent, at the contract price, less the market value of the same. 3. For two hundred and thirty cubic yards of stone quarried, and refused by the assistant superintendent, at the cost of quarrying, less the market value.

Sufficient appears to show that the contract was never rescinded by either party, and that the claimant never signified any intention to abandon it. All that is proved in that regard is that he maintained that the first parcel of stone delivered was up to the contract; and that he protested, in presence of the inspector and superintendents, that he was required to furnish stone superior to that described in the contract, and that he announced to them his intention to make claim for extra allowance. Four payments were made to the claimant, amounting in all to $3,825; and it appears that the vouchers were generally made out upon estimates in advance of the work actually done at the time, copies of which, with the certificate of the superintendent and the receipts of the claimant, are exhibited in the record.

Evidence of the most persuasive and convincing character, to show that the whole quantity of the stone for which compensation is claimed was delivered under the contract, is exhibited in the record; and it is equally certain that the claimant knew that the agents in charge of the work had no authority whatever to enlarge or diminish, vary or alter, any of its terms, stipulations, or conditions, as the contract itself provided that no departure from its condition shall be made without "the written consent of the Secretary of the Treasury." Confirmation of that view is also derived from the act of Congress which conferred the authority to make the contract; the language of the act being that the money appropriated shall be "expended under the direction of the Secretary of the Treasury, and that he shall cause proper plans and estimates to be made, so that the whole expenditure for the erection and completion of the building shall not exceed the sum appropriated for that purpose." 17 Stat. 390.

Aid in the construction of the contract may be derived from the advertisement under which the bids were received, as the advertisement is expressly referred to in the written contract. Bids were invited by the advertisement for one thousand cubic yards, more or less, of rubble-stone . . . which is flat on the bed, sound, durable, and which breaks with a clean, square fracture; one-quarter to be bond-stones of a length equal to the thickness of the walls, and to contain not less than ten cubic feet. No stone containing less than one and one-half cubic feet, or less than twelve inches in thickness, will be received. Wheeler, Civil Engineering, 140.

Nothing can be plainer than the proposition that the contract was framed in conformity with the advertisement and the act of Congress, which provided in effect that the erection and completion of the building should be under the direction of the Secretary of the Treasury. Both parties concur in the construction of the written contract; but the claimant undertakes to set up a subsequent implied contract between himself and the assistant superintendent.

Beyond doubt, it is true that subsequent oral agreements between the parties to a written contract, not falling within the Statute of Frauds, if founded on a new and valuable consideration, may, when made before the breach of the written contract, have the effect to enlarge the time of performance specified in the written instrument, or may vary any other of its terms, or may waive and discharge it altogether. *Emerson* v. *Slater*, 22 How. 28; *Goss* v. *Nugent*, 5 Barn. & Ad. 58; *Leonard* v. *Vredenburgh*, 8 Johns. (N. Y.) 28.

Concede that proposition in its fullest extent, and yet it cannot benefit the claimant, as the findings of the court furnish no ground whatever to show that any subsequent parol agreement was ever made between the contracting parties to vary, enlarge, or diminish any of the terms of the written contract; nor is any thing of the kind pretended by the appellant. What he alleges is, that he was required by the assistant superintendent to furnish better stone than that specified in the written agreement. Proof of that allegation is exhibited; but there is not a particle of proof that the assistant superintendent ever promised that the United States should pay for the stone delivered any

greater sum than five dollars per cubic yard; and, if he had so promised, it could not benefit the claimant; as the contract under which he rendered the service, and under which the four payments to him were made, contained the express stipulation that no departure from the conditions of the contract should be made without the written consent of the Secretary of the Treasury.

Four times, his accounts for rubble-stone delivered were adjusted during the progress of the work, in accordance with the terms of the written contract, as follows: 1. For three hundred cubic yards of rubble-stone at five dollars per cubic yard. 2. For two hundred cubic yards of rubble-stone at five dollars per cubic yard, and the account refers to the written contract as the basis of the charge. 3. For one hundred and fifty cubic yards of rubble-stone at five dollars per cubic yard, less ten per cent retained, and again refers to the written agreement as the source of explanation. 4. For two hundred cubic yards of rubble-stone at five dollars per cubic yard, less ten per cent reserved, with a similar reference to the written agreement for the necessary explanation.

Appended to each is the customary certificate of the superintendent, and the receipt of the claimant for the amount of the charge, stating that it is received "in full payment of the above account." Proofs more persuasive and convincing that the work was done and that the payments were made under the written agreement can hardly be imagined; and they are certainly sufficient to show that the court below committed no error, either in the findings of fact or in their conclusions of law.

Ranged-rubble or broken-ashlar stones are usually of a larger size than ordinary rubble-stones; and the former when trimmed are suitable to make a wall of coursed masonry, as if constructed of squared stone of different sizes, resembling somewhat a wall constructed of dimension-stones. Loss to a considerable extent is sustained by the cutting and trimming, so that the stone measures less in the wall than when first quarried. Such a wall is more expensive than one made of mere rubble-stone, on account of the increased cost of the stone, and the additional labor in cutting and fitting the same before it is laid in the wall.

Rubble-stones flat on the bed, with certain other conditions were specified in the advertisement; but the assistant superintendent desired to construct a wall which required a ranged-rubble stone. Mutual consent is required to modify a contract; and of course the directions of the assistant superintendent were not obligatory, for two reasons: 1. Because in contemplation of law he was not a party to the contract; 2, because he had no authority to act in behalf of the United States.

Viewed in that light, it is clear that the claimant might have declined to follow the directions given, or, if not allowed to complete his contract, might have maintained an action for damages. When the directions were given, he might have refused to comply and given notice to the United States; and, if he had done so, the proper authority would have had an opportunity to determine whether the directions given should be overruled, or whether the wall should be constructed as proposed by the assistant superintendent. Nothing of the kind was done, and the opportunity was lost to the United States to exercise any option in the matter. Instead of that, the claimant readily submitted to the directions given by the unauthorized agent, without giving any notice to the proper authority of the United States that he should claim any greater compensation. Subsequent complaints were made by him, in the presence of the superintendents, that he was required to furnish a superior stone to that required by the contract; and at one time he announced his intention to make claim for extra allowance, which is in fact what the claimant now demands.

Two facts are the chief reliance of the claimant; to wit, 1, that the stone delivered is better than that which the claimant contracted to furnish; 2, that the United States accepted the material, and is now in the full enjoyment of the same. Based on these facts, the proposition of the claimant is that he is entitled to recover the actual value of the materials, without reference to the contract price: which cannot for a moment be admitted, as the findings show that the written contract was in full force and operation, no attempt having been made by either party to vary or rescind it; and that the claimant acted under it in furnishing and delivering the stone; and that the public authorities, also, in adjusting his accounts and in making

the payments referred to, conformed in all respects to its terms, stipulations, and conditions.

Unquestioned authority was given to the Secretary of the Treasury to make the contract; and he in contemplation of law made it when he approved the instrument signed by the claimant and the superintendent. Even the claimant does not pretend that any other contract was ever approved by the Secretary, nor does he pretend that the assistant superintendent ever promised to pay any greater sum than the original contract price. All the claimant ever suggested was, that he intended to make claim for extra allowance, for which there is no pretence of any express contract; nor can such a claim be supported, under the circumstances of this case, upon any implied promise, the record showing that the express contract was in full force and operation. *Ladd* v. *Franklin*, 37 Conn. 62.

Express stipulations cannot in general be set aside or varied by implied promises; or, in other words, a promise is not implied where there is an express written contract, unless the express contract has been rescinded or abandoned, or has been varied by the consent of the parties. Hence the rule is, that, if there be an express written contract between the parties, the plaintiff in an action to recover for work and labor done, or for money paid, must declare upon the written agreement so long as the special agreement remains in force and unrescinded, as he cannot recover under such circumstances upon a *quantum meruit*. 1 Story, Contr. (5th ed.), sect. 18; *Selway* v. *Fogg*, 5 Mees. & W. 83; *Creighton* v. *City of Toledo*, 18 Ohio St. 447; *Weston* v. *Davis*, 24 Me. 374; *Whiting* v. *Sullivan*, 7 Mass. 107; *Merrill* v. *The Ithaca & Owego Railroad Co.*, 16 Wend. 586; *Glacius et al.* v. *Black*, 50 N. Y. 145.

When a special contract for work and services has been abandoned and put an end to, if the employer has derived some benefit from work done under it, he may be made liable upon an implied promise to make reasonable remuneration in respect to such work. *Burns* v. *Miller*, 4 Taunt. 745; *Inchbald* v. *Plantation Company*, 17 C. B. N. S. 733; *Bartholomew* v. *Markwick*, 15 C. B. N. S. 711; Addison, Contr. (6th ed.) 23.

Implied promises or promises in law exist only when there is no express promise between the parties, — *expressum facit*

cessare tacitum. Hence, says Chitty, a party cannot be bound by an implied promise, when he has made an express contract as to the same subject-matter; which is certainly sound law, unless the express contract has been rescinded or abandoned. Chitty, Contr. (10th ed.) 62; *Toussaint* v. *Martinnant*, 2 T. R. 100; *Cutter* v. *Powell*, 6 id. 320; *Ferguson* v. *Carrington*, 9 B. & C. 59; *Atherton* v. *Dennett*, Law Rep. 7 Q. B. 327.

Apply these principles to the case before the court, and it is clear that none of the errors assigned can be sustained; the rule being that, where the service is performed under an express contract, there can be no recovery where there is no proof of a breach of the agreement. Where there is a breach of the agreement, an action will lie for the breach; but, if there be no breach, no action will lie, as an implied assumpsit does not arise in such a case, unless it be shown that the parties have abandoned the express agreement, or have rescinded or modified it so as to give rise to such an implication. *The Mayor and City Council of Baltimore* v. *Eschbach*, 18 Md. 276.

Jurisdiction is not conferred upon the Court of Claims to allow mere extra allowances in a case where there is no promise to that effect, either express or implied. Power to hear and determine claims founded upon any law of Congress, or upon any regulation of an executive department, or upon any contract, express or implied, with the government of the United States, and all claims which may be referred to it by either house of Congress, is vested in the Court of Claims. Mere applications for extra allowance, unsupported by any contract express or implied, must be made to Congress, where alone they can properly be entertained. Rev. Stat., sect. 1059.

Judgment affirmed.

FELTON v. UNITED STATES.

1. Doing or omitting to do a thing "knowingly and wilfully" implies not only a knowledge of the thing, but a determination with an evil intent to do it or to omit doing it.
2. A distiller of spirits is presumed to be acquainted with the utensils and machinery used in his business, and with their character and capacities. But the law does not attach culpability and impose punishment where there is no intention to evade its provisions, and the usual means to comply with them are adopted.
3. All that the law requires of him, to avoid its penalties, is to use in good faith the ordinary means — by the employment of skilled artisans and competent inspectors — to secure utensils and machinery which will accomplish the end desired. If, then, defects exist, and the end sought be not attained, or defects in the utensils or machinery not then open to observation be subsequently discovered, he is not chargeable with "knowingly and wilfully" omitting to do what is required of him.

ERROR to the Circuit Court of the United States for the District of Massachusetts.

The sixteenth section of the act of July 20, 1868, imposing taxes on distilled spirits (15 Stat. 131), provides, among other things, that the owner, agent, or superintendent of any distillery shall erect in a room or building, to be provided and used solely for that purpose, two or more receiving cisterns; each to be at least of sufficient capacity to hold all the spirits distilled during twenty-four hours, into which shall be conveyed all the spirits produced in the distillery; and that each cistern shall be connected with the outlet of the worm or condenser by suitable pipes or other apparatus, so as to prevent the abstraction of spirits while passing from the outlet of the worm or condenser back to the still or doubler. The ninety-sixth section provides (id. 164) that if any distiller shall "knowingly and wilfully" omit, neglect, or refuse to do or cause to be done any thing required by law in conducting his business, or shall do any thing by that act prohibited, if there be no specific penalty or punishment imposed by any other section, he shall pay a penalty of $1,000; and all distilled spirits or liquors owned by him, or in which he has any interest as owner, shall be forfeited to the United States.

This action was brought, by the United States, against

Felton & Stone, distillers of spirits, to recover the penalty of $1,000 prescribed by this act, upon the alleged ground that they "knowingly and wilfully" omitted, neglected, and refused to construct and maintain pipes and other apparatus connecting the receiving cisterns in their distillery with the outlet of the worm and condenser, in such manner as to prevent the abstraction of spirits while passing from the outlet back to the still and doubler, contrary to the form of the statute in such case provided. The defendants pleaded not guilty in "manner and form as alleged," and denied every allegation of the declaration.

On the trial it appeared that, the still of the defendants having become worn and defective, a new one was made and placed in their distillery, which proved to be too large for the capacity of the low-wine receiver; and that on the 18th of June, 1872, the low wines in it began to overflow; that the defendants and their servants were ignorant of this want of capacity of the receiver until it was too late to remedy it for the distillation then taking place, and that there was no course left for them but to let the wines overflow and run to waste, or to catch them, and secure their benefit to the government and themselves by dumping them into the vats for redistillation. The receiver was a part of the apparatus by which the low wines were carried from the try-box back to the doubler.

The superintendent of the distillery, on the morning of the 18th of June, 1872, apprehensive of the overflow, called upon the assessor of the district, and asked permission to draw off from the receiver a portion of the low wines, and dump them into vats for redistillation; and, failing to obtain such permission from him, induced him to telegraph to the commissioner of internal revenue to grant it for a few days, until a new cistern could be built. The answer of the commissioner was a refusal to grant the permission, and a direction that the defendants must build new cisterns. After this dispatch was sent, and before the answer was received, the superintendent arrived at the distillery; and, finding that the wines had overflowed the receiver, he permitted a portion of the contents to be drawn off. This was effected by withdrawing a plug from a pipe in the side of the receiver, about nine inches

from its top. About four hundred gallons of low wines were thus drawn off, and dumped into a vat, from which material for distillation was at the time being pumped for redistillation. The record states that this was done in good faith, for the purpose of saving the property for the defendants and the government. The evidence showed that the wines were worthless, or next to worthless, except for redistillation, and were not marketable. Among other instructions to the jury, the court was requested to give the following: "That if the inadequacy of the low-wine cistern was unknown to the defendants and their superintendent until too late to prevent the overflow, and that then the superintendent, in the exercise of his best judgment, acting in good faith, drew off the wines and dumped the same into the vats for redistillation, the defendants were not liable."

The court refused to give this instruction; but charged the jury that the defendants must be held accountable for the acts of their superintendent in the management of the distillery, and, if they found that he had violated the law by designedly opening the low-wine receiver, and withdrawing the plug from the pipe, so that the spirits could be and were abstracted while passing from the outlet of the worm back to the still or doubler, they were authorized to find against the defendants. The jury found a verdict for the plaintiffs, and assessed their damages at the sum of $1,000; but they accompanied their verdict with a finding that there was only a technical violation of the law, and that there was clearly no intention to defraud the government thereby. Judgment having been entered upon the verdict, the case was brought here on writ of error.

Mr. Benjamin Dean for the plaintiffs in error.

Mr. Assistant-Attorney-General Smith, contra.

MR. JUSTICE FIELD, after stating the case, delivered the opinion of the court.

The act of Congress, in requiring the apparatus connecting the receiving cisterns in a distillery with the outlet of the worm and condenser to be constructed in such a manner as to prevent the abstraction of spirits while passing from the outlet and condenser back to the still and doubler, was designed to guard against frauds upon the revenue, the perpetration of

which would be facilitated by any other construction. It did not intend to prohibit such abstraction when necessary, from unforeseen contingencies, to prevent the waste or destruction of the liquor. Accidents in the distillery — such as the breaking of the bands of the cisterns, and leakage from unknown defects, the danger of an approaching fire, and many other causes — may not only render it necessary, but a duty, on the part of the distiller, to draw off the liquor in the speediest way. The spirit and purpose of the act are not to be lost sight of in a strict adherence to its letter. The offence, therefore, of the defendants consisted, not in their taking measures to save the low wines which were overflowing the receiver and running to waste, by drawing off a portion of the contents of the receiver and dumping it into the vats for redistillation, but in their omission to have a receiver of sufficient capacity to hold the low wines which were distilled on the eighteenth day of June, 1872. If they were culpable for the abstraction of the wines, it was because of such omission; and on this point the evidence failed in an essential particular. So far from showing or tending to show that, when the new still was made and placed in the distillery, the defendants, or any of their servants, had any knowledge of the incapacity of the receiver to hold all the wines that might be distilled on any day, it showed their ignorance of the defect until it was too late to remedy it for the distillation then taking place. There was, therefore, the absence of that knowledge which could render the neglect wilful, and therefore actionable. They must have "knowingly and wilfully" omitted to furnish a receiver of sufficient capacity, before the severe penalty prescribed could be imposed upon them and their distilled spirits subjected to forfeiture. Doing or omitting to do a thing knowingly and wilfully, implies not only a knowledge of the thing, but a determination with a bad intent to do it or to omit doing it. "The word 'wilfully,'" says Chief Justice Shaw, "in the ordinary sense in which it is used in statutes, means not merely 'voluntarily,' but with a bad purpose." 20 Pick. (Mass.) 220. "It is frequently understood," says Bishop, "as signifying an evil intent without justifiable excuse." Crim. Law, vol. i. sect. 428.

If the record were silent as to the want of knowledge of the

superintendent, it would be presumed from his connection with the distillery that he knew the still was too large for the capacity of the receiver; and from his knowledge similar knowledge would be imputed to his principals. Parties are presumed to be acquainted with the utensils and machinery used in their business, and of course with their character and capacities. But the law at the same time is not so unreasonable as to attach culpability, and consequently to impose punishment, where there is no intention to evade its provisions, and the usual means to comply with them are adopted. All punitive legislation contemplates some relation between guilt and punishment. To inflict the latter where the former does not exist would shock the sense of justice of every one.

While, therefore, the presumption against the parties of knowledge of defects in the utensils and machinery of their distilleries is great, and not easily rebutted, it is not conclusive: it can be overcome. Distillers are not supposed to be experienced machinists, familiar with the construction of their different works, and with every thing required to render them perfect in all their parts. In many particulars they must necessarily rely to a great extent upon others. All that the law does require or can require of them, to avoid its penalties, is to use in good faith the ordinary means—by the employment of skilled artisans and competent inspectors—to secure utensils and machinery which will accomplish the end desired. If defects should then exist, and the end sought be not attained, or defects not then open to observation should subsequently be discovered, the parties cannot be charged with "knowingly and wilfully" omitting to do what is required of them. We think, therefore, that the instruction requested should have been given. The object of the law in all its stringent provisions is to prevent fraud upon the revenue and to secure the tax levied. Here no fraud was intended by the defendants It is so found by the jury; and, moreover, none could have been committed by them in what they did. The low wines drawn off passed into the vat, with other matter, for distillation. They were in that condition worthless, or nearly so, except for redistillation: they were not marketable spirits. The record so states, and adds that the parties in drawing off the wines,

which were running over and going to waste, acted in good faith for the purpose of saving the property for themselves and the government; that is, as we understand it, of saving the property, and securing the tax to the government. If a purpose to evade the laws be an element in the offence charged, the defendants could not, under the evidence presented by the record, be rightfully subjected to the penalty prescribed and the forfeiture of their property.

The judgment will be reversed, and case remanded for a new trial; and it is

So ordered.

PRATT v. PRATT.

1. The Statute of Limitations applicable to the action of ejectment has no relation to the lien of a judgment creditor on the lands, though the judgment debtor may sell and convey them with possession to the party setting up the statute.
2. That statute does not begin to run in such case until the lands have been sold under an execution sued out on the judgment, and the purchaser of them becomes entitled to a deed; because, until then, there is no right of entry or of action against the party so in possession.
3. That statute begins to run against the judgment creditor only when he is such purchaser, and can bring ejectment. These propositions are applicable to the statute of Illinois of 1835 limiting actions for the recovery of lands to seven years.

ERROR to the Circuit Court of the United States for the Northern District of Illinois.

The facts are stated in the opinion of the court.

Mr. Jerome Carty for the plaintiff in error.

No counsel appeared for the defendant in error.

MR. JUSTICE MILLER delivered the opinion of the court.

This is an action of ejectment in which plaintiff in error was plaintiff below. On the trial, he proved title in Isaac Speer in August, 1857, at which time he recovered a judgment against said Speer, under which the land in controversy was sold July 8, 1863, and a deed made to plaintiff, founded on that sale, Feb. 24, 1865. There does not seem to be any question but

that this vested in the plaintiff the legal title to the land some four years before the date of the commencement of this action, which was the fifteenth day of May, 1869.

Defendant relied solely on the Statutes of Limitation of seven years as found in the acts of the Illinois legislature of 1835 and 1839, p. 674 of the Revised Statutes of 1874. We are not favored with any argument, oral or written, by the defendant in error, and have had to find out for ourselves on what he bases the defence of the court's ruling.

It does not appear that the defence under the act of 1839 was established; but the court instructed the jury that if they believed certain facts were proved, which facts had reference to the seven years' possession under the act of 1835, their verdict should be for the defendant.

The law of 1835 provides that, "No person who has or may have any right of entry into any lands, tenements, or hereditaments, of which any person may be possessed by actual residence thereon, having a connected title in law or equity, deducible of record from this State or the United States, or from any public officer or other person authorized by the laws of this State to sell such lands, for non-payment of taxes, or from any sheriff, marshal, or other person authorized to sell such land on execution, or under any order, judgment, or decree of any court of record, shall make any entry therein, except within seven years from the time of such possession being taken; but, when the possessor shall acquire such title after the time of taking such possession, the limitation shall begin to run from the time of acquiring title."

The defendant has, we think, brought himself within the language of this section by sufficient proof, so far as actual possession for seven years under a connected title in equity deducible of record from the United States could do so. And, on this proposition alone, the court told the jury to find for the defendant; but this instruction failed to give effect to other evidence before the jury and undisputed, which, we think, had an important bearing on the case.

Upon an examination of the plaintiff's title, it will be seen that he had no right of entry until Feb. 24, 1865. If the statute began to run against him at that time, it had not run seven

years, but only a little over four, when the suit was brought. Nor was there a right of entry, or right of action, in any person against defendant during his entire possession, until the marshal's deed was made to the plaintiff; for the reason that the equitable title under which the defendant held possession was derived from Speer. That is to say, after the judgment of the plaintiff against Speer was rendered, and a lien on the land thereby established in favor of the plaintiff, Isaac Speer, the judgment debtor, conveyed the land to Thomas Speer, and Thomas Speer conveyed to Samuel Roberts, and Samuel Roberts to Charles L. Roberts. The defendant connected his possession with this title, by showing a contract of purchase from Charles L. Roberts. It is obvious, from this recital, that there was no one who could lawfully enter upon the land in the defendant's possession until the plaintiff's judgment lien had become perfected into a legal title by sale and conveyance.

Was it the purpose of this statute that the period of limitation should begin against one who had a lien of record on the land, but who was in no condition to make entry or bring suit, and when the person in privity with him, that could otherwise have made entry or brought suit, had parted with that right to the defendant?

The very first words of the section describe the person against whom the act is directed as a person having a right of entry. While no such strict construction can be maintained as that this right of entry must be in the same person during the entire seven years that possession is running in favor of the defendant, it seems reasonable that this period of seven years is not to begin when there was no right of entry in any one who could oust the defendant. The principle on which the Statute of Limitations is founded is the laches of the plaintiff in neglecting to assert his right. If, having the right of entry or the right of action, he fails to exercise it within the reasonable time fixed by the statute, he shall be for ever barred. But this necessarily presupposes the existence of the right of entry or the right to bring suit. There can be no laches in failing to bring an action, when no right of action exists. There can be no neglect in asserting a right to the possession of property held by another, when that other is in the rightful possession.

But the possession then rightful may, by the termination of the right under which it is held, or by the creation (in some legal mode) of a superior title, cease to be rightful. The right of possession may, in some of these modes, come into another. It is then that laches begins, if the person who has thus acquired the better right neglects to assert it. And it is then that the principle of the limitation of actions for recovery of the land first applies; and, if uninterrupted for the prescribed period, becomes a perfect bar to the recovery of the rightful owner. There is nothing in this statute which appears to conflict with this view. The possession must be continuous, and connected with color of title, legal or equitable. There must be a right of entry in some one else to be tolled by this seven years' possession, and the possession must be adverse to this right of entry.

It is said that, under the decision of the courts of Illinois, such possession as that of the defendant in the present case is adverse to all the world. There is no doubt but the Supreme Court of Illinois has said this, and that, in a general sense, it is true.

The defendant, having purchased the land of the person who had the legal title, does undoubtedly hold adversely to everybody else. He admits no better right in any one. He is no man's tenant. The right by which he holds possession is superior to the right of all others. He asserts this, and he acts on it. His possession is, in this sense, adverse to the whole world. But it is not inconsistent with all this that there exists a lien on the land, — a lien which does not interfere with his possession, which cannot disturb it, but which may ripen into a title superior to that under which he holds, but which is yet in privity with it. In the just sense of the term, his possession is not adverse to this lien. There can be no adversary rights in regard to the possession under the lien, and under the defendant's purchase from the judgment debtor, until the lien is converted into a title conferring the right of possession. The defendant's possession after this is adverse to the title of plaintiff; and then, with the right of entry in plaintiff, the bar of the statute begins to run.

This is a question of the construction of the statutes of Illi-

nois; and the case of *Martin* v. *Judd* (81 Ill. 488) is supposed to be in conflict with what we have here said. But we are unable to see any thing in that case to justify such a conclusion. It is true that plaintiff in that case, as in this, asserted title under a judgment, a sale, and marshal's deed. The defendant asserted title under a judgment against the same party, and a sale and conveyance by the sheriff. The judgment under which plaintiff claimed was rendered July 14, 1854; sale, Sept. 1, 1856; and marshal's deed, June 28, 1858. The judgment under which defendant claimed was rendered March 4, 1858; sale, Nov. 7, 1859; sheriff's deed, Oct. 14, 1862. The defendant relied on the seven years' statute of limitation. The suit, however, was commenced April 7, 1873; and the plaintiff had his marshal's deed June 28, 1858, which was fifteen years before he brought his action. The plaintiff, therefore, had the right of entry and a right of action for fifteen years before he brought suit.

During all this time, or at least during the last seven years of it, the defendant had a possession under a title which was in every sense adverse to that of plaintiff.

In the case before us, plaintiff sued within five years after his lien became a title. Two of the seven years' possession on which defendant relies was at a time when plaintiff had no title, and consequently no right of action, and while none existed in those from whom he derives title. *Martin* v. *Judd* cannot therefore raise the only question there is in this case. The instruction of the court to the jury, and the comments in the opinion of the Supreme Court, show that the point in controversy in that case was whether the defendant had shown a continuous possession adverse to the plaintiff. That it was adverse, there can be no doubt; though it was insisted that it was otherwise, because held under a title derived from the same person that plaintiff's was. But it is very clear that, after the deed of the sheriff under the sale on the junior judgment, the possession held under that deed was a possession in conflict with and adverse to the title then held by plaintiff; namely, his deed under the senior judgment.

The opinion in *Martin* v. *Judd* refers to, and cites with approbation, the opinion of the court in *Cook* v. *Norton et al.*, 48 Ill. 20. That case was twice before the Supreme Court of Illi-

nois, and received (as is evident) a very careful consideration. It is reported in 43 Ill. 391, and in 48 id. 20. In that case, Ryan was the common source of title. A judgment was recovered against him, Aug. 14, 1845; and a sale under execution on that judgment was made April 8, 1846. No deed was made under this sale until July, 1860, more than fourteen years after the sale, though the certificate of sale was filed in the recorder's office when it was made. Ryan conveyed the property, in a few months after the judgment was rendered, to persons under whom the defendants held title and possession. The suit was commenced within the seven years after Cook obtained the sheriff's deed; but, as this was fourteen years after the sale, the question raised was when the statute began to run against Cook's title. A few extracts from the learned opinion of Mr. Justice Lawrence will show that the court is in accord with the views we have already expressed.

"Would any one deny," he asks, "that the purchaser in possession could protect himself, by proper proof, under the Statute of Limitations, if more than seven years had elapsed from the time when the prior purchaser had received or might have received his deed? . . . The defendant has never acknowledged a lessor, nor any title paramount to his own. It is true the Statute of Limitations did not begin to run in his favor until the expiration of fifteen months from the sheriff's sale; because until then there was no outstanding title upon which suit could be brought. But upon that day the purchaser at the sale was at liberty to take out his deed, clothe himself with the legal title, and demand possession; and from that day the statute began to run." The fifteen months here alluded to was the time which was allowed after a sale under execution for the debtor, or any other judgment creditor of the debtor, to redeem the land, by paying the amount for which it sold, with interest. "But," continued the court, "although the sheriff's deed made on that day would have divested the legal title from Clark and vested it in the purchaser, that fact would not have converted Clark into a tenant. From that moment he became a trespasser, and might have been sued as such." Again, speaking of the defendant Clark, the court says: "His possession began under his deed as a possession hostile to all other persons;

and, though the Statute of Limitations did not begin to run until the expiration of fifteen months from the day of the sheriff's sale, it was not because there was no adverse possession in fact until that day, but because until then there was no person in being who could bring the suit. That the sheriff's deed must be considered as having been made when the right to it accrued, so far as the Statute of Limitations is concerned, is conceded by counsel for appellant."

These very clearly stated views of the Supreme Court of Illinois must control the present case. The plaintiff's right to the marshal's deed accrued July 8, 1863. The Statute of Limitation began to run on that day, and the bar of seven years would have become perfect on the 8th of July, 1870. This suit, however, was commenced on the 15th of May, 1869, more than a year before the statute bar was completed.

If we are wrong in what we have supposed to be the law, it must follow that, in all cases in which the owner of real estate owes money which is a lien on the land in his hands, the Statute of Limitation begins to run against that lien as soon as he conveys the land with possession to some one else. It can make no difference in the principle asserted, whether the lien be created by a judgment or by a mortgage. Nor can it make any difference whether the debt secured by the lien be due when the conveyance is made, or has ten or twenty years to run before the lien can be enforced against the land. The principle asserted is applicable in all these cases; namely, that from the day of the conveyance, by the debtor, of the land on which the lien of the debt exists to some third person, accompanied by transfer of possession, the possession of the purchaser is adverse to the lien-holder, and the limitation of seven years begins to run. If this be established to be the law, the owner of real estate may borrow money on ten years' time, to the value of that estate, and give a mortgage on it to secure payment; and by a sale and conveyance of the land to a third person, with delivery of possession a week afterwards, the lien is utterly defeated. For, according to this doctrine, the Statute of Limitation begins to run against the mortgagee the moment the title and possession are vested in the purchaser, and the bar of the statute becomes perfect against all the world by seven years' pos-

session; whereas the mortgagee can take no steps to foreclose his mortgage until his money comes due, three years later.

And this doctrine is asserted in the face of the fact that there is a limitation law specially applicable to the enforcement of the judgment lien by sale under execution, and of the mortgage lien by foreclosure.

This question came before the Supreme Court of Pennsylvania in the case of *Coutler* v. *Phillips* (20 Pa. St. 155), and was fully discussed. We will close this opinion by giving *verbatim* the closing remarks of the court in that case, so perfectly applicable to the one before us. "Lien creditors are subject to a limitation of five years; but the statute of limitations that concerns the action of ejectment has no relation to them. They have no estate in the land, no right of entry, no action to be affected by the statute. The statute bars the right of action, and protects the occupant, not for his merit (for he has none), but for the demerit of his antagonist in delaying his action beyond the period assigned for it. *Sailor* v. *Hertzogg*, 2 Barr, 185. But what right of action has a lien creditor to delay? His only remedy is by levy and sale. He then has an estate and a right of entry. The statute may then attach; before, it cannot."

The peremptory instruction of the Circuit Court to the jury, that the facts we have stated established a good defence, was erroneous, and the judgment must be reversed, and a new trial had; and it is

So ordered.

MR. JUSTICE CLIFFORD dissenting.

I dissent from the opinion of the court in this case, for two principal reasons: 1. Because it conflicts with the decisions of the State court upon the same subject. 2. Because the statute of limitations applicable to the case began to run when the defendant acquired the open, exclusive, adverse possession of the premises, by actual residence thereon, under claim and color of title: it appearing that he continued to reside there, without interruption, for the period of seven years prior to the commencement of the suit, having entered pursuant to a contract with the owner, who had a connected title

to the same, deducible of record, from the United States; and that the defendant subsequently acquired the title to the premises, in pursuance of the contract, the rule being that such an adverse possession, if uninterrupted and continued for the period of seven years, is equivalent to an absolute title, when confirmed by a conveyance from the party having a connected title deducible of record, from the United States. Examined in the light of these suggestions, it is clear, in my opinion, that the case was properly submitted to the jury, and that the judgment founded on their verdict should be affirmed.

SAGE v. RAILROAD COMPANY.

1. An appeal lies here from the final decree of the Circuit Court confirming a sale made under its order.
2. After the term at which such final decree was rendered, any justice of this court may, within the time prescribed by law, allow an appeal, and approve the bond which is to operate as a *supersedeas*.
3. A general appearance waives all defects in a citation.
4. The refusal of the Circuit Court to accept a *supersedeas* bond, when offered during the term at which the decree was rendered, does not take from a judge of that court, or a justice of this court, the power to approve one thereafter.

MOTION. 1. To dismiss the appeal. 2. To vacate the *supersedeas*.

Mr. H. B. Turner and *Mr. J. C. Bullitt* in support of the motions.

Mr. N. A. Cowdry and *Mr. R. T. Merrick*, *contra*.

MR. CHIEF JUSTICE WAITE delivered the opinion of the court.

This case was before us at the last term, upon a motion to dismiss an appeal from a decree entered Oct. 22, 1875, and to vacate a *supersedeas* upon that appeal. We denied the motion to dismiss, but vacated the *supersedeas*. The case is reported in 93 U. S. 412.

After the vacation of the *supersedeas*, the decree of Oct. 22, 1875, was executed, July 18, 1877, by a sale of the mortgaged

property. The master having reported the sale to the court, Sage, Cowdrey, & Buell, who had been admitted as defendants in the suit, for the purpose of an appeal from the former decree, filed exceptions; which were overruled, Aug. 31, 1877; and an order was entered confirming the sale, and directing the master to convey the property sold to the Farmers' Loan and Trust Company, — the purchaser, in trust for the parties interested in the purchase under the provisions of the trust-deed, as defined in the original decree. At the same time, a deed of conveyance executed by the master was presented; and the court ordered that it be delivered to the Farmers' Loan and Trust Company, and recorded. Afterwards, during the same day, Sage, Buell, & Cowdrey, in open court, prayed an appeal to this court, from certain orders entered in the cause, Oct. 21, 1875, and from the decree of confirmation, and "each and every other order made in the cause, Aug. 31, 1877." They also asked that security for a *supersedeas* might be accepted and approved. The court entered an order allowing the appeal; but refused to accept a *supersedeas* bond, or, as it is expressed in the order, refused the *supersedeas*. The bond for the appeal was fixed at $1,000, to be made to the clerk of the court, in trust for whom it might concern, approved by one of the judges of the court, and filed within thirty days. No bond of any kind was executed at that time.

On or about the 15th of September, 1877, Sage, Buell, & Cowdrey presented to Mr. Justice Hunt, of this court (and a justice assigned to a different circuit from that in which the district of Iowa is situated), a petition setting forth the taking of an appeal by them, in open court, from the order of Aug. 31, and its allowance; and stating, further, that "no *supersedeas* bond was given or approved." They thereupon tendered a bond, payable to the clerk of the court, in the sum of $20,000, which they asked that justice to approve and allow "to operate as a *supersedeas* bond in the . . . cause." The security being satisfactory, the bond was "approved to operate as a *supersedeas* when the same was filed in the office of the clerk of the Circuit Court of the United States at Des Moines, Iowa;" and it was so filed Sept. 22, 1877.

On the 24th of September, 1877, Sage and Cowdrey executed

another bond, payable to the clerk, in the sum of $1,000, conditioned according to law, for a *supersedeas;* which was approved by the district judge for the district of Iowa, and filed in the clerk's office, Oct. 11, 1877.

The appellees now move to dismiss the appeal; or, in case that motion shall not be granted, for a vacation of the *supersedeas.*

1. As to the appeal.

It is clear that this appeal does not bring up for examination the orders of Oct. 21, 1875. Every proceeding in the cause which was prior to Oct. 22, 1875, must be examined, if at all, under the appeal from the decree of that date still pending here.

The only order made Aug. 31, 1877, which is in the nature of a final decree, is that confirming the sale, and directing the conveyance to the purchaser by the delivery of the deed presented and approved.

We have often decided that a decree confirming a sale, if it is final, may be appealed from. *Blossom* v. *Railroad Company*, 1 Wall. 655; *Butterfield* v. *Usher*, 91 U. S. 246. In this case it is final, so far as title under the sale is concerned. It cuts off the equity of redemption by the railroad company and the junior mortgagees and general creditors, except as provided in the decree of Oct. 22; and passes the title to the purchaser, subject to certain trusts already fixed by the court, over which the present appellants have control only through their appeal from the former decree. No reversal of any order hereafter made will necessarily divest this title. The proceedings hereafter will relate only to the disposition of the property acquired by the purchase and the proceeds of the sale. For relief against the sale, resort can alone be had to an appeal from the decree of confirmation.

2. As to the *supersedeas.*

The statute makes no provision in terms for the form of the allowance of an appeal (Rev. Stat., sect. 692); but as there can be no appeal without the taking of security, either for costs or costs and damages, and this is to be done by the court, or a judge or justice, the acceptance of the security, if followed when necessary by the signing of a citation, is, in legal effect, the allowance

of an appeal. If the security is given and accepted in open court during the term at which the decree appealed from is rendered, no citation is necessary; because the parties, being presumptively present during the whole term, are charged with notice of all that is done affecting their interests. Whenever, therefore, security for an appeal is accepted during the term, an appeal is allowed. If the security is taken out of court, and after the term, a citation should be issued to bring in the parties, unless they voluntarily appear; for, until the security has been accepted, the allowance of the appeal cannot be said to have been perfected.

Whoever can sign a citation may allow an appeal; and by sect. 999, Rev. Stat., it is provided that this may be done by a judge of the Circuit Court or a justice of this court. The power is not confined to the justice assigned to the particular circuit in which the court that rendered the decree is held. When, therefore, Mr. Justice Hunt accepted the security in this case, he allowed an appeal, which, by reason of the form of the security, was to operate as a *supersedeas*. No question in respect to a citation arises, because the appellees have appeared.

The refusal of the Circuit Court to accept a *supersedeas* bond when offered during the term, did not necessarily take from a judge of that court, or a justice of this court, the power to approve one thereafter. It is true that the bond accepted in this case recites an allowance of an appeal in open court; but this is mere surplusage, and does not affect either the appeal or the validity of the bond. It may be that the form of the application was one calculated to mislead the judge, and that it did do so; but the fraud, if any, was not such as, in our opinion, would justify us in setting aside what has been done. We are satisfied that the appellants were entitled to their appeal; and that, if taken in time, the *supersedeas* followed as a matter of law upon the giving of the necessary security. We ought not to set aside a *supersedeas*, in a case like this, simply because the justice who approved the bond, and thus allowed the appeal which operated as a *supersedeas*, might have sent the appellants to another judge with their application, if he had known all the facts.

We are not now called upon to determine the effect of the

supersedeas which has been obtained; but we are of the opinion that, to the extent it may properly operate as a stay of proceedings, it must be sustained.

The motions to dismiss the appeal and vacate the *supersedeas* are consequently

Denied.

MORGAN v. RAILROAD COMPANY.

1. A party is not permitted to deny a state of things which his conduct or misrepresentations led another to believe existed and to act in accordance with that belief.
2. The doctrine of estoppel *in pais* always presupposes error on one side, and fault or fraud upon the other, and some defect of which it would be inequitable for the party against whom the doctrine is asserted to take advantage.
3. No particular form of words is required to the validity of a dedication. The assent of the owner, and the use of the premises for the purposes intended by the appropriation, are sufficient, and estop him from revoking the dedication.

APPEAL from the Circuit Court of the United States for the Northern District of Illinois.

This suit was commenced by a bill filed by Morgan against the Chicago and Alton Railroad Company. It involves the ownership of two strips of land adjoining that over which that company has the right of way, and forming part of its depot grounds in the town of Dwight, in the State of Illinois, which it claims to own as grantee of all the rights and property of the Chicago and Mississippi Railroad Company.

The company filed a cross-bill, wherein it set up the dedication of the property to the public use, and that Morgan was estopped *in pais* from denying it. The court, upon hearing, dismissed the original bill, and decreed in favor of the company on the cross-bill. Morgan thereupon appealed here. The remaining facts are stated in the opinion of the court.

Mr. Hamilton Spencer, for the appellant, cited *Mc Williams* v. *Morgan*, 61 Ill. 89; *Todd* v. *Pittsburgh, Fort Wayne, & Chicago Railroad Co.*, 19 Ohio St. 514; *Gentleman* v. *Soule*, 32 Ill. 271; *Kelly* v. *City of Chicago*, 48 id. 388; *Rees* v. *City of Chicago*, 38 id. 322; *Jacksonville* v. *Jacksonville Railway Co.*,

67 id. 540; *Illinois Insurance Co.* v. *Littlefield et al.*, id. 368; *Warren* v. *The President, &c. of the Town of Jacksonville*, 15 id. 236.

Mr. John P. Wilson, contra.

MR. JUSTICE SWAYNE delivered the opinion of the court.

During the years 1853 and 1854, the Chicago and Mississippi Railroad Company was engaged in locating and building a railroad from Joliet to Alton, in the State of Illinois. The appellant and Spencer and Lathrop were in the service of the company as engineers. Kersey H. Fell was employed to obtain the right of way for the road.

The line of the road was located by Oliver H. Lee, the chief engineer. The parties first named were permitted to locate the stations between the principal points. This was to be done in conformity to the interests of the company.

Spencer says, in his testimony, "My understanding with Mr. Lee was that the railroad company should have ample grounds for the transaction of their business where we located the stations."

With the view of locating one of the stations and laying out a town, four contiguous parcels of land of forty acres each were bought from the United States: one by Morgan, Spencer, and Lathrop, each severally; and the other by Kersey H. Fell, and his brother, Jesse W. Fell.

At the time of the entry of the lands, it was the intention of the parties to locate the depot at the centre of the four tracts. The line of the road was fixed some distance east of that point. This caused the depot to be located upon the tract belonging to Morgan.

Prior to the construction of the road, the other parties conveyed their three tracts to Morgan, under an agreement that all the parties should have joint, instead of separate, interests in the proposed town plat, and that Morgan, as trustee, should lay out the town, and sell and convey the lots. The proceeds were to be divided among the parties according to their original ownership respectively of the lands. On the 6th of August, 1853, Morgan conveyed to the railroad company fifty feet in width on each side of the centre of its roadway through the

several tracts before mentioned. The deed required the company, among other things, to "keep station-houses and other necessary depot buildings on said first-mentioned tract." The tract first mentioned was the one originally entered by Morgan. On the 30th of January following, he laid out the contemplated town plat. The town was called Dwight. The plat shows a strip of land marked "depot," one thousand and four feet long and two hundred feet wide, with the line of the railroad through the centre. There is nothing indicating the previous conveyance of a hundred feet in width through the centre to the railroad company. The premises in controversy are fifty feet in width on each side of this hundred feet.

Morgan sold a part of the town lots, and accounted for the proceeds. In 1855, partition was made of the unsold lots, without reference to the original ownership of the several tracts as entered, and Morgan conveyed accordingly to the other several parties in interest. No notice was taken of the premises in dispute. The business of the trust was thus finally closed.

In 1853 or 1854, Morris, a draftsman in the office of the company, made a map, he says, "for the purpose of showing the company's land, as required for right of way and operating purposes, through different subdivisions of United States surveys, to be a permanent record for the use of the company, showing its property along the line of the road." Morgan and Spencer furnished the materials for the work. It is affixed to his deposition, and marked Exhibit 1. Being asked whether Morgan and Spencer saw it, he answered, "I have no doubt they saw it frequently, as those gentlemen were in the habit of coming into the office where I made this map." The map represents the premises in question as they are represented on the town plat. The diagram has the line of the railroad in the centre, and is marked "depot ground." The data for the map were furnished before the iron was laid upon that part of the roadway. Spencer testified that he supposed the making of the town plat vested a sufficient title in the company. He added, "Had I not thought so, it would have been my duty as engineer of that division to have seen that the company had a proper deed." He said, further, that Morgan occupied the same relation to the company as himself, and

was clothed with the same duty. When the partition was made, he regarded the premises as belonging to the railroad company.

At the time the unsold lots were divided, Jesse W. Fell had the same understanding as to the premises. He says, "Looking at the interests of the parties as affected by the location of the depot, I have always supposed that good faith on our part demanded that these strips should belong to the railroad."

When the partition deeds were made, he supposed that all the property not dedicated had been divided. Morgan himself was examined as a witness. Speaking of the premises, he said, "I set them apart with a view to the ultimate needs of the railroad company at this station," and that it was his intention to convey to the company for a nominal consideration, if they faithfully performed their covenants in his deed for the hundred feet; but that he never had any thought of dedicating the property. He insisted that his interests had been largely sacrificed by the delinquencies of the company touching the covenants.

In 1856 or 1857, he said, "He had given the road the right of way, one hundred feet through the entire land, and fifty feet more on each side for a thousand feet long; and they on their part were to build depot buildings and crossings, and keep them up for all time to come."

At one time the company had a house on the premises used for boarding the laborers working on the road. Morgan claimed that this "was not in compliance with the terms of the grant made to the railroad company." He said that, if the company was allowed to cover the premises with Irish shanties, it would prevent the sale of a corresponding number of lots, and that he should require the house to be removed, which was accordingly done. This occurred in 1860 or 1861. In 1858 or 1859, he sold a corn crib upon the premises, but asserted no title to the ground on which it stood.

In 1867, he said to the village attorney of Dwight, "It was my intention that they" (the company) "should have those lands; and they would have had them had they behaved themselves properly, and had done as they agreed to on their part."

From 1854 to 1863, passengers and teams constantly crossed

the strips, for the purpose of reaching the depot. In 1863, the Chicago and Alton Railroad Company, which had become the successor to all the rights of the Chicago and Mississippi Company, had a track or tracks on the western strip. Both strips had been and were used for various purposes connected with railroad traffic, and several structures had sprung up on them. One of them was a grain elevator, erected under a license from the railroad company. A street thirty feet in width, extending across both strips, was laid out in 1873. Before that, the depot could not have been reached from any direction without crossing private property, if the strips were such, or taking the hazards of passing along the roadway of the company for a distance of five hundred feet. The strips were therefore indispensable to the use of the depot when it was located and built.

From the time of recording the town plat up to the year 1867, no taxes were paid on the premises by either party. Morgan claimed no rents until 1865; he received none until 1867; and he made no effort to sell any part of the property until January, 1872.

The appellee insists that the record discloses a case of estoppel *in pais*, and that the appellant is thereby barred from maintaining the claim which he seeks to enforce in this litigation. The principle is an important one in the administration of the law. It not unfrequently gives triumph to right and justice where nothing else could save them from defeat. It proceeds upon the ground that he who has been silent as to his alleged rights when he ought in good faith to have spoken, shall not be heard to speak when he ought to be silent. *The Bank of the United States* v. *Lee*, 13 Pet. 107.

He is not permitted to deny a state of things which by his culpable silence or misrepresentations he had led another to believe existed, and who has acted accordingly upon that belief. The doctrine always presupposes error on one side and fault or fraud upon the other, and some defect of which it would be inequitable for the party against whom the doctrine is asserted to take advantage. *Merchants' Bank* v. *State Bank*, 10 Wall. 604.

The rule has been settled in Illinois, where this case arose,

in accordance with these views. In *Baker* v. *Pratt* (15 Ill. 568), the court said, "A verbal statement is sufficient, where the party has made an admission which is clearly inconsistent with the evidence he proposes to give or the title or claim which he proposes to set up, and the other party has acted upon the admission, and will be injured by allowing the truth of the admission to be disproved." In the case of *Mills* v. *Graves* (38 Ill. 455), it was said, "Where a party stands by and sees another acting to his injury, and the owner declares that he has no claim, equity will not permit him afterwards to assert his title to the injury of the person he has thus misled." See, also, *The People* v. *Brown et al.*, 67 Ill. 435; *Knoebel* v. *Kircher*, 83 id. 308; *Smith* v. *Newton*, 38 id. 230; *International Bank* v. *Bowen*, 80 id. 541; and *Higgins* v. *Ferguson*, 14 id. 269.

The facts developed in the evidence clearly establish this defence. Briefly stated, they are the advantages given to the appellant and his associates in the location of the stations; the agreement that the railroad company should have ample ground in all such cases for its purposes; the designation of the premises on the town plat by the word "depot;" the fuller designation of a like diagram of the premises on the map made for the railroad company; the furnishing of the data for that map by the appellant and his associate, Spencer; the intent of Spencer and Fell that the premises should belong to the corporation, and their belief that the title had vested accordingly; the non-payment of taxes by the appellant for so long a period; his non-claim, and his repeated declarations during that time that the property belonged to the railroad company; the fiduciary relation of the appellant and his associates; and, lastly, the location and building of the depot where it was placed. As is well remarked by the counsel for the appellee, it is incredible that the depot would have been put there if any doubt had been entertained as to the ownership by the company of property so vital to its beneficial use. It would also have been a gross fraud on the part of the appellant, who was then in the service of the company as an engineer, to stand by in silence and see it erected under such circumstances.

Whether the estoppel here, as in cases of estoppel by deed, passed the legal title by inurement, it is not necessary to con-

sider. In either view, it is alike fatal to the appellant's claim. The authorities upon the subject are not in harmony. *Favill* v. *Roberts*, 50 N. Y. 222; *Doe, ex dem. McPherson*, v. *Walters*, 16 Ala. 714; *Brown* v. *Wheeler*, 17 Conn. 345; Bigelow on Estoppel, pp. 534, 537.

The bar of the Statute of Limitations confers a positive title. *Leffingwell* v. *Warren*, 2 Black, 599.

It is also insisted, in behalf of the appellee, that the premises in question were dedicated by the appellant to the railroad company. This question arises under the twenty-first section of chapter 25 of the Revised Statutes of Illinois of 1845. The provisions of the statute are peculiar. It declares, touching town plats, that the plat or map, when executed and recorded as required, "and every donation or grant to the public, or any individual or individuals, religious society or societies, or to any corporation or bodies politic, marked or noted on such plat or map," shall be deemed a sufficient conveyance of such parcels of land to vest a fee-simple title, and shall be considered a general warranty against the donor and his heirs to the grantee, for his benefit, "for the uses and purposes therein named, expressed, or intended, and for no other use or purpose whatever." Four classes of parties are named who may be the recipients of the donation: 1. The public; 2. Any individuals; 3. Any religious societies; 4. Any corporations or bodies politic. The purposes of the grant are not required to be set forth, nor is there any limitation as to what they shall be. The power and will of the donor are unfettered. The provisions are simply a mode of conveyance which the grantor may pursue, if he chooses to do so. The language of the statute is clear and explicit. There is no room for doubt. The case is one in which the rule applies, that there shall be no construction where there is nothing to construe. Dwarris, Statutes, pp. 143, 144. There can be no doubt of the power of the legislature so to provide.

Was the intention of the appellant to dedicate the premises to the railroad company for its use for depot purposes, as claimed, "named, expressed, or intended"? Either, as to the use, is, according to the statute, sufficient.

The facts to which we have adverted in the previous parts of

this opinion seem to us conclusive upon the subject. The question must be resolved in the affirmative. If this view be correct, the legal title, by virtue of the statute, passed to the corporation with the right of user as to the premises for all depot purposes, but for none other.

"No particular forms of words is required to the validity of a dedication. The dedication may be made by a survey and plat alone, without any declaration, either oral or on the plat, that it was the intention of the proprietor to set apart certain grounds for the use of the public. An examination of the cases referred to on the argument will show that dedications have been established in every conceivable way by which the intention of the dedicator could be evinced." *Godfrey* v. *The City of Alton*, 12 Ill. 29.

"The question whether a person intends to make a dedication of ground to the public for a street or other purpose must be determined from his acts, and statements explanatory thereof, in connection with all the circumstances which surround and throw light upon the subject, and not from what he may subsequently testify as to his real intent in relation to the matter." *The City of Columbus* v. *Dahn*, 36 Ind. 330.

All that is required is the assent of the owner, and the use of the premises for the purposes intended by the appropriation. The law considers the owner's acts and declarations as in the nature of an estoppel *in pais* and precludes him from revoking the dedication. *City of Cincinnati* v. *The Lessee of White*, 6 Pet. 431; *Holden* v. *Cold Spring*, 24 N. Y. 474.

These authorities apply alike to all the dedications authorized by the statute.

The subject of dedication, in all its aspects, was fully and ably considered in *Rowan's Executors* v. *Town of Portland*, 8 B. Mon. (Ky.) 232. It is sufficient to refer to the case.

Upon the grounds, both of estoppel and dedication, we hold the decree of the Circuit Court to be correct.

Decree affirmed

O'REILLY v. EDRINGTON.

1. The security required upon writs of error and appeals must be taken by the judge or justice. He cannot delegate that power to the clerk.
2. An appeal by an assignee in bankruptcy lies here from the final decree of the Circuit Court, affirming that of the District Court rendered when sitting in equity, against him for the payment of money, if the amount in controversy be sufficient.

MOTION to dismiss an appeal from the Circuit Court of the United States for the Southern District of Mississippi.

This is an appeal by O'Reilly, assignee in bankruptcy, from the decree of the court below, affirming, in the exercise of its appellate jurisdiction, the decree of the District Court, whereby the appellees, who were defendants, recovered against him, by reason of the matters set up in their cross-bill, $5,050.

O'Reilly having prayed an appeal from the decree, the court thereupon, May 18, 1877, "ordered and decreed that said appeal be, and the same is hereby, allowed to operate as a *supersedeas*, upon the said complainant entering into bond, with sufficient sureties, to be approved by the clerk of this court, conditioned according to law, in the sum of $7,000, to be given within sixty days from this date. Or, if said complainant should desire to prosecute said appeal, so that the same shall not operate as a *supersedeas*, then it is ordered and decreed that the said appeal be, and is hereby, allowed, upon his entering into bond, with sufficient sureties, conditioned according to law, to be approved by the clerk of this court, in the sum of $250."

The bond filed is a *supersedeas* bond in the sum of $7,000, and is approved by the clerk of the court below. The appellees now move to dismiss the appeal because, —

1. The following agreement between the parties, dated April 30, 1874, signed by them, approved by their respective counsel, and ratified and confirmed by the judge of the District Court, whose decree was affirmed by the Circuit Court, bars the right to any appeal to this court.

"This agreement, made this thirtieth day of April, 1874, between H. E. O'Reilly, assignee of W. H. Edrington, Jr., and W. H. Edrington, Jr., and H. C. Edrington, administrators and heirs-at-law of Eliza M. Edrington and W. H. Edrington, Sen., witnesses that, whereas in a certain suit pending in the District Court of the United States, Southern District of Mississippi, wherein the said H. E. O'Reilly, as assignee in bankruptcy to said W. H. Edrington, Jr., is claiming, as said assignee, the title and right of property in certain decrees rendered by the Chancery Court of Adams County against Shipland plantation, and the notes of John Hall secured by said decree, to which suit the said W. H. Edrington, Jr., H. C. Edrington, and W. H. Edrington, Sen., are defendants, it has, in order to avoid further expensive litigation, been agreed to by the said parties that a decree shall be rendered by said District Court in favor of said O'Reilly, assignee and complainant; and as a part of said agreement and compromise, whereby said litigation is to be concluded, it is agreed by the parties to this agreement that the said O'Reilly, as assignee as aforesaid, shall buy the tax-title to the said Shipland plantation, purchased by said Eliza M. Edrington during her lifetime, and also pay all taxes which have been paid by said Eliza and her said heirs and administrators upon said plantation. Now, therefore, the said W. H. Edrington, Sen., W. H. Edrington, Jr., and H. C. Edrington, hereby agree to convey by quitclaim deed to said O'Reilly, as assignee aforesaid, or to such grantee as he may designate within one year from the date of this agreement, or sooner if the money consideration shall be earlier tendered therefor, all the right, title, and interest acquired by said Eliza Edrington, during her lifetime, in said Shipland plantation, under a sale of said lands for taxes; and the said O'Reilly, as assignee aforesaid, in consideration of the premises and the aforesaid conveyance, hereby agrees to pay said W. H. Edrington, Jr., H. C. Edrington, or their attorneys, such sums of money as were paid by said E. M. Edrington in purchasing the tax-title to said Shipland plantation, and such further sums as have been paid by her or her said heirs and administrators in the payment of taxes for and on account of said plantation. It is further agreed that this agreement shall be void, unless the same be approved and confirmed by the said District Court in bankruptcy."

2. There is no jurisdictional amount in dispute on the appeal.

3. The appeal is frivolous, and taken for delay.

4. There is no legal bond in the record.

5. The case is neither within the appellate jurisdiction of this court, nor of the Circuit Court, unless in the exercise of the supervisory powers of the latter, and there its decrees are final and irrevocable.

Mr. Thomas J. Durant and *Mr. C. W. Hornor* in support of the motion.

Mr. Alexander Porter Morse and *Mr. A. B. Pittman*, in opposition thereto, cited *Knapp* v. *Banks*, 2 How. 73; *Gordon* v. *Ogden*, 3 Pet. 33; *Walker* v. *United States*, 4 Wall. 163; *Merril* v. *Petty*, 16 id. 345; *Western Union Telegraph Co.* v. *Rogers*, 93 U. S. 565; *Silver* v. *Ladd*, 6 Wall. 440; *Davison* v. *Lanier*, 4 id. 454; *Martin* v. *Hunter's Lessee*, 1 Wheat. 361; *Jerome* v. *McCarter*, 21 Wall. 17; *Martin* v. *Hazard Powder Co.*, 93 U. S. 302; *Milner* v. *Meek*, 95 id. 252; *Deen* v. *Hemphill*, Hempst. 154; *Anson, Bangs, & Co.* v. *The Blue Ridge Railroad Co.*, 23 How. 1; *Seymour* v. *Freer*, 5 Wall. 822; *Brobst* v. *Brobst*, 2 id. 96; Powell, Appellate Proceedings, 371; Hilliard, New Trials, 740; *Robeson* v. *Lewis*, 64 N. C. 734; *McDonald* v. *Bradley*, 8 Ired. (N. C.) 72; *Stickney* v. *Wilt*, 23 Wall. 150.

MR. CHIEF JUSTICE WAITE delivered the opinion of the court.

None of the objections to this appeal are, in our opinion, well taken, except the one which relates to the approval of the bond. That, we think, must be sustained. The security required upon writs of error and appeals must be taken by the judge or justice. Rev. Stat., sect. 1000. He cannot delegate this power to the clerk. Here the approval of the bond was by the clerk alone. The judge has never acted; but, as the omission was undoubtedly caused by the order of the court permitting the clerk to take the bond, the case is a proper one for the application of the rule by which this court sometimes refuses to dismiss appeals and writs of error, except on failure to comply with such terms as may be imposed for the purpose of supplying defects in the proceedings. *Martin* v. *Hunter's Lessee*, 1 Wheat. 361; *Dayton* v. *Lash*, 94 U. S. 112.

If the appellant desires that the appeal shall operate as a *supersedeas*, the bond may be in the sum of $7,000; other

wise, in the sum of $250. The security may be approved by any judge or justice authorized to sign a citation upon an appeal in the cause; but this cause will stand dismissed, unless the appellant shall, on or before the first Monday in March next, file with the clerk of this court a bond, with good and sufficient security, conditioned according to law, for the purposes of the appeal; and it is

So ordered.

EX PARTE JACKSON.

1. The power vested in Congress to establish "post-offices and post-roads" embraces the regulation of the entire postal system of the country. Under it, Congress may designate what shall be carried in the mail, and what excluded.
2. In the enforcement of regulations excluding matter from the mail, a distinction is to be made between what is intended to be kept free from inspection, such as letters, and sealed packages subject to letter postage, and what is open to inspection, such as newspapers, magazines, pamphlets, and other printed matter, purposely left in a condition to be examined.
3. Letters, and sealed packages subject to letter postage, in the mail can be opened and examined only under like warrant, issued upon similar oath or affirmation, particularly describing the thing to be seized, as is required when papers are subjected to search in one's own household. The constitutional guaranty of the right of the people to be secure in their papers against unreasonable searches and seizures extends to their papers, thus closed against inspection, wherever they may be.
4. Regulations against transporting in the mail printed matter, which is open to examination, cannot be enforced so as to interfere in any manner with the freedom of the press. Liberty of circulating is essential to that freedom. When, therefore, printed matter is excluded from the mail, its transportation in any other way as merchandise cannot be forbidden by Congress.
5. Regulations excluding matter from the mail may be enforced through the courts, upon competent evidence of their violation obtained in other ways than by the unlawful inspection of letters and sealed packages; and with respect to objectionable printed matter, open to examination, they may in some cases also be enforced by the direct action of the officers of the postal service upon their own inspection, as where the object is exposed, and shows unmistakably that it is prohibited, as in the case of an obscene picture or print.
6. When a party is convicted of an offence, and sentenced to pay a fine, it is within the discretion of the court to order his imprisonment until the fine shall be paid.

PETITION for writs of *habeas corpus* and *certiorari*.

Section 3894 of the Revised Statutes provides that "No letter or circular concerning illegal lotteries, so-called gift-concerts, or other similar enterprises offering prizes, or concerning schemes devised and intended to deceive and defraud the public, for the purpose of obtaining money under false pretences, shall be carried in the mail. Any person who shall knowingly deposit or send any thing to be conveyed by mail, in violation of this section, shall be punishable by a fine of not more than $500, nor less than $100, with costs of prosecution." By an act approved July 12, 1876 (19 Stat. 90), the word "illegal" was stricken out of the section. Under the law as thus amended, the petitioner was indicted, in the Circuit Court of the United States for the Southern District of New York, for knowingly and unlawfully depositing, on the 23d of February, 1877, at that district, in the mail of the United States, to be conveyed in it, a circular concerning a lottery offering prizes, enclosed in an envelope addressed to one J. Ketcham, at Gloversville, New York. The indictment sets forth the offence in separate counts, so as to cover every form in which it could be stated under the act. Upon being arraigned, the petitioner stood mute, refusing to plead; and thereupon a plea of not guilty was entered in his behalf by order of the court. Rev. Stat., sect. 1032. He was subsequently tried, convicted, and sentenced to pay a fine of $100, with the costs of the prosecution, and to be committed to the county jail until the fine and costs were paid. Upon his commitment, which followed, he presented to this court a petition alleging that he was imprisoned and restrained of his liberty by the marshal of the Southern District of New York, under the conviction; that such conviction was illegal, and that the illegality consisted in this: that the court had no jurisdiction to punish him for the acts charged in the indictment; that the act under which the indictment was drawn was unconstitutional and void; and that the court exceeded its jurisdiction in committing him until the fine was paid. He therefore prayed for a writ of *habeas corpus* to be directed to the marshal to bring him before the court, and a writ of *certiorari* to be directed to the clerk of the Circuit Court to send up the record of his conviction, that this court might

inquire into the cause and legality of his imprisonment. Accompanying the petition, as exhibits, were copies of the indictment and of the record of conviction. The court, instead of ordering that the writs issue at once, entered a rule, the counsel of the petitioner consenting thereto, that cause be shown, on a day designated, why the writs should not issue as prayed; and that a copy of the rule be served on the Attorney-General of the United States, the marshal of the Southern District of New York, and the clerk of the Circuit Court. The Attorney-General, for himself and others, answered the rule, by averring that the petition and exhibits do not make out a case in which this court has jurisdiction to order the writs to issue, and that the petitioner is in lawful custody by virtue of the proceedings and sentence mentioned in the exhibits, and the commitment issued thereon.

Mr. A. J. Dittenhoefer and *Mr. Louis F. Post* for the petitioner.

1. From the power to establish post-offices and post-roads, that of receiving, carrying, and delivering the mail is implied; and from these are derived other incidental powers, one of them being the right to protect the mail by appropriate legislation. *McCullough* v. *Maryland*, 4 Wheat. 316; *Sturtevant* v. *City of Alton*, 3 McLean, 393.

2. As the power of Congress is exclusive, its legislation establishing a post-office or post-road, or regulating the receipt, protection, carriage, or delivery of the mail, is therefore supreme. Congress has, in the exercise of the power, declared (Rev. Stat., sect. 3982) that "no person shall establish any private express for the conveyance of letters or packets, or in any manner cause or provide for the conveyance of the same, by regular trips or at stated periods, over any post-route which is or may be established by law, or from any city, town, or place, to any other city, town, or place, between which the mail is regularly carried."

3. The power so vested in Congress imposed upon that body the duty to furnish adequate facilities for the secure transportation and delivery of all letters and packets which were considered legitimate mail matter at the time of the adoption of the Constitution. To provide the requisite funds for the performance of this duty, Congress has imposed reasonable rates

of postage; and, to protect the contents of the mail, has prohibited the putting in the mail-bags of any poisonous or explosive article, which may injure them, or the persons connected with the mail service; and it has also limited the bulk and weight of mailable packets. These are matters of appropriate regulation. Never, however, until 1836, was any attempt made to exclude established mail matter from the mails. The President had previously recommended to Congress the passage of a law prohibiting the conveyance by mail of publications inciting persons held to service in the Southern States to revolt against their masters. Pursuant to the recommendation, a bill was introduced in the Senate providing that it should not be lawful for any deputy-postmaster knowingly to receive and put into the mail any pamphlet, newspaper, handbill, or other printed, written, or pictorial representation, touching the subject of slavery, directed to any person or post-office where, by the laws thereof, their circulation was prohibited. Cong. Globe, 1836, p. 150. The measure was signally defeated. The views of the most eminent statesmen of that day, as they appear in the published debates, against its passage upon constitutional grounds, are applicable to the statute under which the petitioner was convicted, and conclusively demonstrate its unconstitutionality.

4. In the year 1868, Congress, in the exercise of an assumed power, declared that it should not be lawful to deposit in a post-office, to be sent by mail, any letters or circulars concerning lotteries, so-called gift-concerts, or other similar enterprises (15 Stat. 196), although all letters whatsoever, without regard to the character of the communication contained in them, had been previously considered to be legitimate mail matter. That act, initiating this species of legislation, is of a like character with the one governing this case, and both are unconstitutional. If Congress can exclude from the mail a letter concerning lotteries which have been authorized by State legislation, and refuse to carry it by reason of their asserted injurious tendency, it may refuse to carry any other business letter; and as the conveyance of letters otherwise than by the mail of the United States, at stated periods, over any post-road, has, as above shown, been prohibited by Congress, that body may cut off all

means of epistolary communication upon any subject which is objectionable to a majority of its members. So long as the duty of carrying the mails is imposed upon Congress, a letter or a packet which was confessedly mailable matter at the time of the adoption of the Constitution cannot be excluded from them, provided the postage be paid and other regulations be observed. Whatever else has been declared to be mailable matter, — as postal cards, postal money-orders, merchandise, &c., all of which were unknown to the postal system when the convention concluded its labors in 1787, — may, in the discretion of Congress, be abolished.

Mr. Assistant-Attorney-General Smith, contra.

1. Congress has the power "to establish post-offices and post-roads," and to make all laws necessary and proper for carrying into execution that power.

The framers of the Constitution meant to create an establishment as an entirety; not merely to designate the places at which mails should be taken up and delivered, and the routes by which they should be transported from point to point. Full, sovereign control over the whole subject was given, to be exercised by any appropriate means. *Kohl et al.* v. *United States*, 91 U. S. 367; *Dickey* v. *Maysville & Lexington Turnpike Road Co.*, 7 Dana (Ky.), 113; *Sturtevant* v. *City of Alton*, 3 McLean, 393; 2 Story, Const., sects. 1125–1150; Rawle, Const., c. 9, pp. 103, 104.

2. Having exclusive power over the subject, Congress can prescribe the matter which shall receive the benefits of this establishment; and he who complains that he cannot use it to transmit obscene or improper communications, no more maintains a constitutional right than does the debtor who cannot avail himself of the Bankrupt Act because he owes but $100, or because (under the first law on this subject) he is not a trader. It is a question of administration merely. If the public interests require the exclusion of articles morally contaminating, as well as of poisons, acids, or explosives, to prohibit their deposit in the post-office is as "essential to the beneficial exercise of the power" granted by the Constitution, though "not indispensably necessary to its existence," as any of those mentioned in *McCulloch* v. *The State of Maryland*, 4 Wheat. 316.

The remedy is in the hands of the people, if Congress so legislates as to deprive them of the full and just enjoyment of postal privileges.

Any State choosing to sanction a business which Congress thinks ought not to have the use of the mails to facilitate its transactions, can, if she please, provide means of communication for matter so excluded from the mails. 2 Story, Const., sect. 1150; 1 Tucker's Bl. Com., App. 265.

But, if there is a right to exclude any matter from the mail, the extent of its exercise is one of legislative discretion.

MR. JUSTICE FIELD, after stating the case, delivered the opinion of the court.

The power vested in Congress "to establish post-offices and post-roads" has been practically construed, since the foundation of the government, to authorize not merely the designation of the routes over which the mail shall be carried, and the offices where letters and other documents shall be received to be distributed or forwarded, but the carriage of the mail, and all measures necessary to secure its safe and speedy transit, and the prompt delivery of its contents. The validity of legislation prescribing what should be carried, and its weight and form, and the charges to which it should be subjected, has never been questioned. What should be mailable has varied at different times, changing with the facility of transportation over the post-roads. At one time, only letters, newspapers, magazines, pamphlets, and other printed matter, not exceeding eight ounces in weight, were carried; afterwards books were added to the list; and now small packages of merchandise, not exceeding a prescribed weight, as well as books and printed matter of all kinds, are transported in the mail. The power possessed by Congress embraces the regulation of the entire postal system of the country. The right to designate what shall be carried necessarily involves the right to determine what shall be excluded. The difficulty attending the subject arises, not from the want of power in Congress to prescribe regulations as to what shall constitute mail matter, but from the necessity of enforcing them consistently with rights reserved to the people, of far greater importance than the transportation of the mail. In their en-

forcement, a distinction is to be made between different kinds of mail matter,—between what is intended to be kept free from inspection, such as letters, and sealed packages subject to letter postage; and what is open to inspection, such as newspapers, magazines, pamphlets, and other printed matter, purposely left in a condition to be examined. Letters and sealed packages of this kind in the mail are as fully guarded from examination and inspection, except as to their outward form and weight, as if they were retained by the parties forwarding them in their own domiciles. The constitutional guaranty of the right of the people to be secure in their papers against unreasonable searches and seizures extends to their papers, thus closed against inspection, wherever they may be. Whilst in the mail, they can only be opened and examined under like warrant, issued upon similar oath or affirmation, particularly describing the thing to be seized, as is required when papers are subjected to search in one's own household. No law of Congress can place in the hands of officials connected with the postal service any authority to invade the secrecy of letters and such sealed packages in the mail; and all regulations adopted as to mail matter of this kind must be in subordination to the great principle embodied in the fourth amendment of the Constitution.

Nor can any regulations be enforced against the transportation of printed matter in the mail, which is open to examination, so as to interfere in any manner with the freedom of the press. Liberty of circulating is as essential to that freedom as liberty of publishing; indeed, without the circulation, the publication would be of little value. If, therefore, printed matter be excluded from the mails, its transportation in any other way cannot be forbidden by Congress.

In 1836, the question as to the power of Congress to exclude publications from the mail was discussed in the Senate; and the prevailing opinion of its members, as expressed in debate, was against the existence of the power. President Jackson, in his annual message of the previous year, had referred to the attempted circulation through the mail of inflammatory appeals, addressed to the passions of the slaves, in prints, and in various publications, tending to stimulate them to insurrection; and suggested to Congress the propriety of passing a law prohibiting

under severe penalties, such circulation of "incendiary publications" in the Southern States. In the Senate, that portion of the message was referred to a select committee, of which Mr. Calhoun was chairman; and he made an elaborate report on the subject, in which he contended that it belonged to the States, and not to Congress, to determine what is and what is not calculated to disturb their security, and that to hold otherwise would be fatal to the States; for if Congress might determine what papers were incendiary, and as such prohibit their circulation through the mail, it might also determine what were not incendiary, and enforce their circulation. Whilst, therefore, condemning in the strongest terms the circulation of the publications, he insisted that Congress had not the power to pass a law prohibiting their transmission through the mail, on the ground that it would abridge the liberty of the press. "To understand," he said, "more fully the extent of the control which the right of prohibiting circulation through the mail would give to the government over the press, it must be borne in mind that the power of Congress over the post-office and the mail is an exclusive power. It must also be remembered that Congress, in the exercise of this power, may declare any road or navigable water to be a post-road; and that, by the act of 1825, it is provided 'that no stage, or other vehicle which regularly performs trips on a post-road, or on a road parallel to it, shall carry letters.' The same provision extends to packets, boats, or other vessels on navigable waters. Like provision may be extended to newspapers and pamphlets, which, if it be admitted that Congress has the right to discriminate in reference to their character, what papers shall or what shall not be transmitted by the mail, would subject the freedom of the press, on all subjects, political, moral, and religious, completely to its will and pleasure. It would in fact, in some respects, more effectually control the freedom of the press than any sedition law, however severe its penalties." Mr. Calhoun, at the same time, contended that when a State had pronounced certain publications to be dangerous to its peace, and prohibited their circulation, it was the duty of Congress to respect its laws and co-operate in their enforcement; and whilst, therefore, Congress could not prohibit the transmission of the incendiary documents through the mails.

it could prevent their delivery by the postmasters in the States where their circulation was forbidden. In the discussion upon the bill reported by him, similar views against the power of Congress were expressed by other senators, who did not concur in the opinion that the delivery of papers could be prevented when their transmission was permitted.

Great reliance is placed by the petitioner upon these views, coming, as they did in many instances, from men alike distinguished as jurists and statesmen. But it is evident that they were founded upon the assumption that it was competent for Congress to prohibit the transportation of newspapers and pamphlets over postal-routes in any other way than by mail; and of course it would follow, that if, with such a prohibition, the transportation in the mail could also be forbidden, the circulation of the documents would be destroyed, and a fatal blow given to the freedom of the press. But we do not think that Congress possesses the power to prevent the transportation in other ways, as merchandise, of matter which it excludes from the mails. To give efficiency to its regulations and prevent rival postal systems, it may perhaps prohibit the carriage by others for hire, over postal routes, of articles which legitimately constitute mail matter, in the sense in which those terms were used when the Constitution was adopted, consisting of letters, and of newspapers and pamphlets, when not sent as merchandise; but further than this its power of prohibition cannot extend.

Whilst regulations excluding matter from the mail cannot be enforced in a way which would require or permit an examination into letters, or sealed packages subject to letter postage, without warrant, issued upon oath or affirmation, in the search for prohibited matter, they may be enforced upon competent evidence of their violation obtained in other ways; as from the parties receiving the letters or packages, or from agents depositing them in the post-office, or others cognizant of the facts. And as to objectionable printed matter, which is open to examination, the regulations may be enforced in a similar way, by the imposition of penalties for their violation through the courts, and, in some cases, by the direct action of the officers of the postal service. In many instances, those officers can act

upon their own inspection, and, from the nature of the case, must act without other proof; as where the postage is not prepaid, or where there is an excess of weight over the amount prescribed, or where the object is exposed, and shows unmistakably that it is prohibited, as in the case of an obscene picture or print. In such cases, no difficulty arises, and no principle is violated, in excluding the prohibited articles or refusing to forward them. The evidence respecting them is seen by every one, and is in its nature conclusive.

In excluding various articles from the mail, the object of Congress has not been to interfere with the freedom of the press, or with any other rights of the people; but to refuse its facilities for the distribution of matter deemed injurious to the public morals. Thus, by the act of March 3, 1873, Congress declared "that no obscene, lewd, or lascivious book, pamphlet, picture, paper, print, or other publication of an indecent character, or any article or thing designed or intended for the prevention of conception or procuring of abortion, nor any article or thing intended or adapted for any indecent or immoral use or nature, nor any written or printed card, circular, book, pamphlet, advertisement, or notice of any kind, giving information, directly or indirectly, where, or how, or of whom, or by what means, either of the things before mentioned may be obtained or made, nor any letter upon the envelope of which, or postal-card upon which indecent or scurrilous epithets may be written or printed, shall be carried in the mail; and any person who shall knowingly deposit, or cause to be deposited, for mailing or delivery, any of the hereinbefore mentioned articles or things, . . . shall be deemed guilty of a misdemeanor, and, on conviction thereof, shall, for every offence, be fined not less than $100, nor more than $5,000, or imprisonment at hard labor not less than one year nor more than ten years, or both, in the discretion of the judge."

All that Congress meant by this act was, that the mail should not be used to transport such corrupting publications and articles, and that any one who attempted to use it for that purpose should be punished. The same inhibition has been extended to circulars concerning lotteries, — institutions which are supposed to have a demoralizing influence upon the people. There is no

question before us as to the evidence upon which the conviction of the petitioner was had; nor does it appear whether the envelope in which the prohibited circular was deposited in the mail was sealed or left open for examination. The only question for our determination relates to the constitutionality of the act; and of that we have no doubt.

The commitment of the petitioner to the county jail, until his fine was paid, was within the discretion of the court under the statute.

As there is an exemplified copy of the record of the petitioner's indictment and conviction accompanying the petition, the merits of his case have been considered at his request upon this application; and, as we are of opinion that his imprisonment is legal, no object would be subserved by issuing the writs; they are therefore

Denied.

NATIONAL BANK v. OMAHA.

1. Even though an appeal is asked for in open court, if the security is not taken until after the term, a citation must be issued to bring in the parties, unless they voluntarily appear.
2. The ruling in *O'Reilly* v. *Edrington* (*supra*, p. 724), that a judge or justice cannot delegate to the clerk the power to approve the security upon writs of error and appeals, approved, and applied to this case.

APPEAL from the Circuit Court of the United States for the District of Nebraska.

Mr. J. M. Woolworth for the appellant.

No counsel appeared for the appellee.

MR. CHIEF JUSTICE WAITE delivered the opinion of the court.

The decree in this case was rendered Nov. 13, 1874; and at the end appears the following entry: —

"Whereupon said complainant, by its solicitor, prays an appeal to the Supreme Court of the United States, which is allowed; and bond to be given on said appeal is fixed at $500."

A bond was filed Sept. 30, 1875, which appears to have been

approved by the clerk, and not by the judge. No citation has been issued or served, and there is no appearance in this court by the appellees.

We have decided at the present term, in *Sage* v. *Railroad Company* (*supra*, p. 712), that, even though an appeal is asked for in open court, if the security is not taken until after the term, "a citation should be issued to bring in the parties, unless they voluntarily appear, for, until the security has been accepted, the allowance of the appeal cannot be said to have been perfected;" and, in *O'Reilly* v. *Edrington* (*supra*, p. 724), that "the security upon writs of error and appeals must be taken by the judge or justice. He cannot delegate this power to the clerk."

Appeal dismissed.

INDEX.

ABATEMENT. See *Pleading*, 3, 4.

ACCOUNTING OFFICERS. See *Limitations, Statute of*, 2.

ACTING ASSISTANT-COMMISSARY. See *Quartermaster*.

ADDITIONAL COMPENSATION. See *Quartermaster*.

ADMIRALTY. See *Appeal*, 1; *Practice*, 6.

AGENT. See *Contracts*, 12; *Fraud*, 1; *Insurance*, 1–3, 5–7, 11.

Where an agent, without authority, borrows moneys in the name of his principal, and the latter, when they have been applied to his use and payment is demanded of him, fails, within a reasonable time thereafter, to disavow the act of his agent, the jury is authorized to consider the principal as assenting to what was done in his name. *Gold-Mining Company* v. *National Bank*, 640.

ALIEN ENEMIES. See *Confederate States*, 9.

APPEAL. See *Practice*, 5; *Supersedeas*.

1. An appeal to the Circuit Court, from the decree of the District Court, in a case in admiralty, carries up the whole fund. *The "Lady Pike,"* 461.
2. An appeal lies here from the final decree of the Circuit Court confirming a sale made under its order. *Sage* v. *Railroad Company*, 712.
3. After the term at which such final decree was rendered, any justice of this court may, within the time prescribed by law, allow an appeal, and approve the bond which is to operate as a *supersedeas*. *Id.*
4. An appeal by an assignee in bankruptcy lies here from the final decree of the Circuit Court, affirming that of the District Court, rendered when sitting in equity, against him for the payment of money, if the amount in controversy be sufficient. *O'Reilly* v. *Edrington*, 724.
5. Even though an appeal is asked for in open court, if the security is not taken until after the term, a citation must be issued to bring in the parties, unless they voluntarily appear. *National Bank* v. *Omaha*, 737.

APPEARANCE. See *Appeal*, 5.

A general appearance by the appellee waives all defects in a citation *Sage* v. *Railroad Company*, 712.

APPROPRIATE LEGISLATION. See *Constitutional Law*, 3.

ARMY REGULATIONS. See *Quartermaster*, 2.

ARREST OF JUDGMENT. See *Practice*, 3.

ASSESSMENT OF DAMAGES. See *Utah, Code of Practice of.*

ASSESSMENT OF TAXES. See *Due Process of Law*, 1–5; *Illinois.*

ASSIGNEE IN BANKRUPTCY. See *Appeal*, 4; *Bankruptcy*, 1; *Pledge* 1–5.

ATTORNEY-AT-LAW. See *Champerty, Frauds, Statute of*, 1; *Trustee*

AUTRE ACTION PENDANT. See *Pleading*, 3, 4.

BANKRUPTCY. See *Injunction.*

1. Assumpsit by an assignee in bankruptcy of an insurance company against the holder of shares of its stock, to enforce the collection of the balance due thereon, the same not having been paid pursuant to the order of the court sitting in bankruptcy. Plea, *non assumpsit*. *Held*, 1. that the plea admits the existence of the corporation, and that the State alone can raise the question whether the corporate stock had been properly increased. 2. That the transferee of stock, who caused the transfer to be made to himself on the books of the corporation, although he holds it as collateral security for a debt of his transferrer, is liable for such balance to such assignee. *Pullman* v. *Upton*, 328.
2. The mere non-resistance of a debtor to judicial proceedings in which a judgment was rendered against him, when the debt was due and there was no valid defence to it, is not the suffering and giving a preference under the Bankrupt Act; and the judgment is not avoided by the facts, that he does not file the petition in bankruptcy, and that his insolvency was known to the creditor. *National Bank* v. *Warren*, 539.

BELLIGERENT RIGHTS. See *Confederate States*, 2–5.

BILL OF PARTICULARS.

Matters of evidence are not required to be stated in a bill of particulars. *Garfield* v. *Paris*, 557.

BOND. See *District of Columbia*, 2.

BOTTOMRY AND RESPONDENTIA.

1. So long as a vessel exists *in specie* in the hands of the owner, although she may require repairs greater than her value, a case of "utter loss," within the meaning of a bottomry and respondentia bond, does not arise, and she continues subject to the hypothecation. *Insurance Company* v. *Gossler*, 645.

BOTTOMRY AND RESPONDENTIA (*continued*).

2. The holder of such a bond, which was conditioned to be void should an utter loss from any of the enumerated perils occur, is, upon a wreck of the vessel during the specified voyage, not amounting to such loss, entitled to the proceeds of the cargo saved by his efforts, as against the insurers thereof, who accepted an abandonment by the owners as for a "total loss," and paid the amount of their policies, said proceeds being insufficient to satisfy the bond. *So held* in this case, which relates solely to such proceeds. *Id.*

BRACES AND SUSPENDERS. See *Imports, Duty on*, 19, 20.

BREWER. See *Court of Claims.*

BURDEN OF PROOF.

In an action against a collector of customs to recover the amount of duties on imports alleged to have been exacted in violation of law, the burden of proof is upon the plaintiff. *Arthur* v. *Unkart*, 118.

CALIFORNIA. See *Patents of the United States for Land*, 1-4; *Preemption*, 1; *School Lands*, 1.

CESTUI QUE TRUST. See *Trustee, Trust Fund.*

CHALLENGE. See *Juror.*

CHAMPERTY.

A contract to pay to an attorney-at-law for his services in suits concerning land, if it be recovered, a specific sum of money out of the proceeds, when it shall be sold by the client, is not champertous, because he neither pays costs nor accepts the land, or any part of it, as his compensation. *McPherson* v. *Cox*, 404.

CHARTER-PARTY. See *Contracts*, 3.

CHOCOLATE. See *Imports, Duty on*, 13, 14.

CITATION. See *Appeal*, 5; *Appearance.*

CLAIMS AGAINST THE UNITED STATES. See *Estoppel*, 2.

A. presented an unliquidated claim against the United States for $151,588.17, which was audited by the accounting officers, and allowed for $97,507.75. He was informed of this adjustment, and of the principles upon which it had been made; and a draft for the amount allowed, payable to his order, was sent to him, which he received and collected without objection. *Held*, that his receipt of the money was equivalent to an acceptance of it in satisfaction of the claim. *Baird* v. *United States*, 430.

COLLATERAL SECURITY. See *Bankruptcy*, 1; *Equity*, 2.

COLLECTOR OF CUSTOMS, ACTION AGAINST. See *Burden of Proof; Imports, Duty on*, 26.

COMMERCE. See *Constitutional Law*, 1-4; *Jurisdiction*, 3.

COMMERCIAL DESIGNATION OF AN ARTICLE. See *Imports, Duty on*, 2–5, 9, 20.

COMMON LAW. See *Lien, Pledge*, 1–5.

CONDEMNATION. See *Confiscation*, 2, 4–6.

CONDITION PRECEDENT. See *Municipal Bonds*, 13; *Patents of the United States for Land*, 1–4; *Removal of Causes*, 1.

CONDITIONS, WAIVER OF. See *Insurance*, 1–8.

CONFECTIONERY. See *Imports, Duty on*, 13, 14.

CONFEDERATE NOTES,

1. A decree, or a judgment, when rendered upon a contract payable in Confederate treasury notes, should be for a sum equal to the value of those notes, not in the gold coin, but in the legal-tender currency, of the United States, at the time when and the place where they were payable. *Bissell* v. *Heyward*, 580.
2. Such notes can in no proper sense be regarded as commodities merely. *Id.*

CONFEDERATE STATES. See *Constitutional Law*, 9.

1. The Confederate States was an illegal organization, within the provision of the Constitution of the United States prohibiting any treaty, alliance, or confederation of one State with another; whatever efficacy, therefore, its enactments possessed in any State entering into that organization must be attributed to the sanction given to them by that State. *Williams* v. *Bruffy*, 176.
2. When a rebellion becomes organized, and attains such proportions as to be able to put a formidable military force in the field, it is usual for the established government to concede to it some belligerent rights; but to what extent they shall be accorded to the insurgents depends upon the considerations of justice, humanity, and policy controlling the government. *Id.*
3. The concession of belligerent rights to the Confederate government sanctioned no hostile legislation against the citizens of the loyal States. *Id.*
4. *De facto* governments of two kinds considered: (1.) Such as exists after it has expelled the regularly constituted authorities from the seats of power and the public offices, and established its own functionaries in their places. so as to represent in fact the sovereignty of the nation. As far as other nations are concerned, such a government is treated as in most respects possessing rightful authority; its contracts and treaties are usually enforced; its acquisitions are retained; its legislation is in general recognized; and the rights acquired under it are, with few exceptions, respected after the restoration of the authorities which were expelled. (2.) Such as exists where a portion of the inhabitants of a country have separated themselves from the parent State and established an independent government. The

CONFEDERATE STATES (*continued*).

validity of its acts, both against the parent State and the citizens or subjects thereof, depends entirely upon its ultimate success; if it fail to establish itself permanently, all such acts perish with it; if it succeed and become recognized, its acts from the commencement of its existence are upheld as those of an independent nation. *Id.*

5. The Confederate government was distinguished from each kind of such *de facto* governments. Whatever *de facto* character may be ascribed to it consists solely in the fact that for nearly four years it maintained a contest with the United States, and exercised dominion over a large extent of territory. Whilst it existed, it was simply the military representative of the insurrection against the authority of the United States; when its military forces were overthrown, it utterly perished, and with it all its enactments. *Id.*

6. Pursuant to a statute of the Confederate States, and to an order of the Confederate District Court for the District of South Carolina, certain shares of the stock of a corporation of that State were, upon the ground that the owners of them were alien enemies, sequestrated and sold in 1862 at public auction; and the company was required to erase from its stock-books the names of such owners, insert those of the purchasers, and issue stock certificates to them. All dividends thereafter from time to time declared were paid to the purchasers, against whom, or their assignees, and the company, this bill was filed by an original stockholder, praying for a decree that the certificates so issued be cancelled as null and void, and the defendants enjoined from selling them, bringing suits to effect the transfer thereof, or collect dividends thereon, and the company from allowing such transfers, issuing new certificates for the same, or paying such dividends. The court decreed accordingly. *Held*, 1. That the order of sequestration, the sale, the transfer on the stock-books of the company, and the new certificates, were void, giving no right to the purchasers or to their assignees, and taking none from the original owners. 2. That the bill was well brought, and the corporation a proper party defendant. 3. That the purchasers, or their assignees, have no claim against the company for indemnity; but if, under the circumstances, entitled to any redress, they must seek it by suit against the parties by whom they claim to have been defrauded. *Dewing* v. *Perdicaries*, 193.

CONFISCATION.

1. The act of July 17, 1862 (12 Stat. 589), so far as it related to the confiscation of property, applied only to the property of persons who thereafter might be guilty of acts of disloyalty and treason; and it reached only the estate of the party for whose offences the property was seized. *Conrad* v. *Waples*, 279.

2. Until some provision was made by law for the condemnation of property in land of persons engaged in the rebellion, the courts of

CONFISCATION (*continued*).

the United States could not decree a confiscation of it, and direct its sale. *Id.*

3. Such persons were not denied the right of contracting with and selling to each other; as between themselves, all the ordinary business could be lawfully carried on, except in cases where it was expressly forbidden by the United States, or would have been inconsistent with or have tended to weaken its authority. *Id.*

4. The purpose of the United States to seize and confiscate the property of certain classes of persons engaged in the rebellion having been declared by the act of July 17, 1862, sales and conveyances of property subsequently made by them could only pass a title subject to be defeated, if the government should afterwards proceed for its condemnation. The fact that the property sold and conveyed was at the time within the territory occupied by the Federal troops, created no other legal impediment to the transfer. *Id.*

5. The provision in that act, that "all sales, transfers, or conveyances" of property of persons therein designated shall be null and void, only invalidates such transactions as against any proceedings taken by the United States for the condemnation of the property. They are not void as between the parties, or against any other party than the United States. The case of *Corbett* v. *Nutt* (10 Wall. 464) cited on this point, and approved. *Id.*

6. A sale by public act, before a notary within the insurrectionary territory, of land in the city of New Orleans by one enemy to another for a valuable consideration, previous to the passage of the Confiscation Act, passed the title to the purchaser, which was not affected by subsequent judicial proceedings for its condemnation for alleged offences of the vendor. The case of *Fairfax's Devisee* v. *Hunter's Lessee* (7 Cranch, 603) cited and approved. *Id.*

7. The Registry Act of Louisiana was not intended to protect the United States in the exercise of its power of confiscation from the consequences of previous unrecorded sales by the alleged offender. By the decree, the United States acquires for his life only the estate which at the time of the seizure he actually possessed, not what he may have appeared from the public records to possess, by reason of the omission of his vendees to record the act of sale to them; and only that estate, whatever it may be, for that period passes by the marshal's sale and deed. *Burbank* v. *Conrad*, 291.

CONSIDERATION. See *Municipal Bonds*, 2.

CONSTITUTIONAL LAW. See *Confederate States*, 1, 3; *Due Process of Law*, 1–5; *Jurisdiction*, 4; *Post-offices and Post-roads; Removal of Causes*, 2; *Texas, Constitution of.*

1. The powers conferred upon Congress to regulate commerce with foreign nations and among the several States, and to establish post-offices and post-roads, are not confined to the instrumentalities of commerce,

CONSTITUTIONAL LAW (*continued*).

or of the postal service known or in use when the Constitution was adopted, but keep pace with the progress of the country, and adapt themselves to the new developments of time and circumstances. *Pensacola Telegraph Co.* v. *Western Union Telegraph Co.*, 1.

2. They were intended for the government of the business to which they relate, at all times and under all circumstances; and it is not only the right, but the duty, of Congress to take care that intercourse among the States and the transmission of intelligence are not obstructed or unnecessarily encumbered by State legislation. *Id.*

3. The act of Congress approved July 24, 1866 (14 Stat. 221, Rev. Stat., sect. 5263 *et seq.*), entitled "An Act to aid in the construction of telegraph lines, and to secure to the government the use of the same for postal, military, and other purposes," so far as it declares that the erection of telegraph lines shall, as against State interference, be free to all who accept its terms and conditions, and that a telegraph company of one State shall not, after accepting them, be excluded by another State from prosecuting its business within her jurisdiction, is a legitimate regulation of commercial intercourse among the States, and is appropriate legislation to execute the powers of Congress over the postal service. *Id.*

4. Nor is it limited in its operation to such military and post roads as are upon the public domain. *Id.*

5. The statute of Florida approved Dec. 11, 1866, so far as it grants to the Pensacola Telegraph Company the exclusive right of establishing and maintaining lines of electric telegraph as therein specified, is in conflict with that act, and therefore inoperative against a corporation of another State entitled to the privileges which that act confers. *Id.*

6. Without deciding whether, in the absence of that act, the legislation of Florida of 1874 would have been sufficient to authorize a foreign corporation to construct and operate a telegraph line within the counties of Escambia and Santa Rosa in that State, the court holds that a telegraph company of another State, which has secured a right of way by private arrangement with the owner of the land, and duly accepted the restrictions and obligations required by that act, cannot be excluded by the Pensacola Telegraph Company. *Id.*

7. The legislature of a State does not impair the obligation of a contract by enlarging, limiting, or altering the modes of proceeding for enforcing it, provided that the remedy be not withheld, nor embarrassed with conditions and restrictions which seriously impair the value of the right. *Tennessee* v. *Sneed*, 69.

8. The act of the legislature of Tennessee, providing that there shall be no other remedy in any case of the collection of revenue, or attempt to collect revenue illegally, or attempt to collect revenue in funds only receivable by a collector of taxes under the law, the same be-

CONSTITUTIONAL LAW (*continued*).

other or different funds than such as the tax-payer may tender or claim the right to pay, than by paying the tax under protest, and within thirty days thereafter suing the collector to recover it, the judgment, if for the tax-payer, to be paid in preference to other claims on the treasury, does not leave a party without an adequate remedy for asserting his right to pay his State taxes in certain bills, made receivable therefor under the charter granted to the Bank of Tennessee in the year 1838, but which bills the collector refused to accept. *Id.*

9. An enactment of the Confederate States enforced as a law of one of the States composing that confederation, sequestrating a debt owing by one of its citizens to a citizen of a loyal State as an alien enemy, is void, because it impairs the obligation of the contract, and discriminates against citizens of another State. The constitutional provision prohibiting a State from passing a law impairing the obligation of contracts equally prohibits a State from enforcing as a law an enactment of that character, from whatever source originating. *Williams* v. *Bruffy*, 176.

10. The legislative acts of the several States composing that confederation stand on different grounds from those of the confederation itself; and, so far as they did not impair or tend to impair the supremacy of the national authority, or the just rights of citizens under the Constitution, they are, in general, to be treated as valid and binding. *Id.*

11. The provision in the Constitution of the United States, that no State shall pass a law impairing the obligation of contracts, is a limitation upon the taxing power of a State as well as upon all its legislation, whatever form it may assume. Therefore, a law changing the stipulations of a contract, or relieving a debtor from a strict and literal compliance with its requirements, enacted by a State in the exercise of that power, is unconstitutional and void. *Murray* v. *Charleston*, 432.

12. The ordinance of the council of the city of Richmond, passed Sept. 8, 1873, that "no car, engine, carriage, or other vehicle of any kind belonging to or used by the Richmond, Fredericksburg, and Potomac Railroad Company shall be drawn or propelled by steam upon that part of their railroad or railway track on Broad Street, east of Belvidere Street, in said city," does not impair any vested right of the company, under its charter, granted Feb. 25, 1834, nor deprive it of its property without due process of law, nor deny it the equal protection of the laws. *Railroad Company* v. *Richmond*, 521.

13. The appropriate regulation of the use of property is not "taking" it, within the meaning of the constitutional prohibition. *Id.*

14. The remedy subsisting in a State when and where a contract is made, and is to be performed, is a part of its obligation; and any subsequent law of the State, which so affects that remedy as substantially

CONSTITUTIONAL LAW (*continued*).
to impair and lessen the value of the contract, is forbidden by the Constitution of the United States, and, therefore, void. *Edwards* v. *Kearzey*, 595.

CONTRACTS. See *Confiscation*, 3; *Constitutional Law*, 7–9, 11, 12, 14; *Debts*, 1; *Frauds, Statute of*, 1, 2; *Insurance*, 10; *Interest*; *Lands, Conveyance of*, 1–4; *Lien*; *Specific Performance*; *Witness*, 4.

1. In an executory contract for the manufacture of goods, and their delivery on a specified day, no right of property passes to the vendee; and, time being of the essence of the contract, he is not bound to accept and pay for them, unless they are delivered or tendered on that day. *Jones* v. *United States*, 24.
2. The court below having found that the goods had not been delivered or tendered at the stipulated time, nor an extension of time for the performance of the contract granted, and there being nothing in the case to warrant the contractor in assuming that any indulgence would be allowed, the United States was not estopped from setting up that when the goods were tendered the contract was at an end. *Id.*
3. Where the United States chartered a vessel for a "voyage or voyages," at a stipulated price per diem for every day when so employed, — *Held*, that the contract only embraced the employment of the vessel when on such voyage or voyages, and did not extend to demurrage. *Mitchell* v. *United States*, 162.
4. Where a contract is made to sell or furnish certain goods identified by reference to independent circumstances, such as an entire lot deposited in a certain warehouse, or all that may be manufactured by the vendor in a certain establishment, or that may be shipped by his agent or correspondent in certain vessels, and the quantity is named, with the qualification of "about," or "more or less," or words of like import, the contract applies to the specific lot, and the naming of the quantity is regarded not as in the nature of a warranty, but only as an estimate of the probable amount, in reference to which good faith is all that is required of the party making it. *Brawley* v. *United States*, 168.
5. But where no such independent circumstances are referred to, and the engagement is to furnish goods of a certain quality or character to a certain amount, the quantity specified is material, and governs the contract. *Id.*
6. If, however, the qualifying words, "about," "more or less," and the like, are supplemented by other stipulations or conditions which give them a broader scope or a more extensive significancy, then the contract is to be governed by such added stipulations or conditions. *Id.*
7. Previous and contemporary transactions and facts may be very properly taken into consideration to ascertain the subject-matter of a

CONTRACTS (*continued*).

contract, and the sense in which the parties may have used particular terms, but not to alter or modify the plain language which they have used. *Id.*

8. Accordingly, where an agreement was entered into between the United States and a contractor, whereby the latter undertook to deliver at the post of Fort Pembina eight hundred and eighty cords of wood "more or less, as shall be determined to be necessary by the post-commander for the regular supply, in accordance with army regulations, of the troops and employés of the garrison of said post, for the fiscal year beginning July 1, 1871," and the post-commander, as soon as the contract came to his knowledge, and within four days after it was signed, notified the contractor that but forty cords of wood would be required thereon, and forbade his hauling any more to the government yard, — *Held*, that the United States was not liable to the contractor for any number of cords beyond the forty delivered. *Id.*

9. Unless forbidden by its charter, a railroad company may contract for a shipment over connecting lines; and, having done so, is liable in all respects upon them as upon its own lines. In such a case, the shipper is authorized to assume that it has made the requisite arrangements to fulfil its obligations. *Railway Company* v. *McCarthy*, 258.

10. Where such a contract is not, on its face, necessarily beyond the scope of the powers of the corporation, it will, in the absence of proof to the contrary, be presumed to be valid. *Id.*

11. A contract for furnishing goods at a certain price, based on the then value of gold, stipulated that such price should be increased or reduced with the rise or the fall in that value, with a proviso, however, that a rise or a fall of twenty-five per cent, unless it remained sufficiently long to affect the general price of merchandise, should not change the contract price of the goods. When they were delivered, gold had undergone a reduction of more than twenty-five per cent below its value at the date of the contract. *Held*, that in a suit on the contract the purchaser was entitled to a corresponding reduction in the contract price of the goods, without showing that the decline in gold had affected the general price of merchandise. *Ames* v. *Quimby*, 324.

12. Where a city council is vested with power to cause sidewalks in the city to be constructed, it may authorize the mayor, and the chairman of the committee on streets and alleys, to make, in its behalf, and pursuant to its directions, a contract for doing the work. *Hitchcock* v. *Galveston*, 341.

13. A provision in the charter, that the city council shall not borrow for general purposes more than $50,000, does not limit the debt of the city, nor prohibit the council from entering into a contract involving an expenditure exceeding that amount, for special improve-

CONTRACTS (*continued*).

ments, such as the grading and paving of streets and the construction of sidewalks, which are authorized by the charter. *Id.*

14. Such a contract is not rendered wholly inoperative because it provides that the work done under it shall be paid for in bonds of the corporation, the issue whereof was not authorized by law. The contract, so far as it is in other respects lawful, remains in force; and for the breach thereof the corporation is liable. *Id.*

15. The contract in question in this case construed, and the proviso therein, in reference to the consent of the owners of the property fronting or abutting on the pavements to be laid, held to have reference to the materials to be used in constructing them, and not to the execution of the work itself. *Id.*

16. A contract entered into between A. and the Quartermaster's Department of the Army, for the delivery of a number of cords of wood at a post on a military reservation, stipulated that no traders, sutlers, contractors, civilians, or others should be allowed to cut timber about said post, until all required by the United States for certain purposes was secured. The contractor cut a part of the wood on the reservation, when he was directed by the post commander to cut outside the reservation, which he did. Having performed his contract, he was paid in full for all the wood delivered thereunder. *Held*, that the contract prohibited him from cutting wood within the reservation, and that he cannot recover damages for any expense he incurred by reason of being compelled to cut and haul, from a point outside the reservation, the wood necessary to complete his contract. *Francis* v. *United States*, 354.

17. A. contracted to cut, furnish, and deliver in Washington City, at specified rates, granite to the United States, at such times as it might require, and to furnish such number of men as it might deem necessary to the proper prosecution of the work. The full cost of their labor, increased by fifteen per cent, was also to be paid to him by the United States. For every day that he was in default he was to forfeit and pay $100. *Held*, that there was no privity between the United States and the men employed by him in the execution of his contract. *United States* v. *Driscoll*, 421.

18. A. contracted by parol, in New York, for the purchase of a large quantity of spirituous liquor of B., who, by the agreement, was to furnish certain labels. B. delivered them, pursuant to instruction, to A. in New York, and shipped the liquor to A. in Michigan, where he resided. A., when sued for the price of the liquor, no part of which had been paid, insisted that the contract was not completed until the delivery of the liquor in Michigan, and he relied upon the prohibitory liquor law of that State, which declares that all such contracts are null and void. The jury found that the labels added to the value of the liquor, and formed part of the price, and that A. accepted them in New York as a part of the goods sold.

CONTRACTS (*continued*).

Held, that the finding of the jury upon the question of acceptance being final and conclusive, the contract was executed in New York, and was by the laws thereof valid. *Garfield* v. *Paris*, 557.

19. A. agreed to furnish the United States a number of cubic yards of rubble-stone, for the construction of a public building under a contract which, after prescribing the dimensions of the material, and the price to be paid therefor, provided that no departure should be made from its conditions, without the written consent of the Secretary of the Treasury. Such consent was not given. The assistant superintendent, in charge of the erection of the building, declined to receive certain of the stones, although they were within the description of the contract; and required A. to furnish others of a different and more expensive kind, which the latter did. *Held*, that as A. was bound to take notice of the fact that the assistant superintendent had no power to vary the contract, he is only entitled to recover according to its terms. *Hawkins* v. *United States*, 689.

CORPORATE STOCK. See *Bankruptcy*, 1; *District of Columbia*.

CORPORATIONS. See *Bankruptcy*, 1; *Confederate States*, 6; *Contracts*, 9, 10; *District of Columbia; Grant*, 1–4; *Illinois; Ultra Vires*.

1. A corporation created by statute can exercise no powers and has no rights, except such as are expressly given or necessarily implied. *Huntington* v. *Savings Bank*, 388.

2. Where two or more corporations, subjected to a special tax upon the net income of their roads, with immunity from other taxation, — the amount of such special tax being dependent upon reports to be made and information communicated by their directors and other officers, — are consolidated into a new corporation, with different directors and other officers, who are neither bound nor able to make the reports and give the information required of the original companies, the new corporation thus created is not entitled to the immunity of the original companies from general taxation. *Railroad Company* v. *Maine*, 499.

3. A new corporation may be created by the union of two or more corporations, and its powers and privileges designated by reference to the charters of other companies as well as by special enumeration. *Id.*

4. The act of the legislature of Maine of 1856, authorizing two or more existing corporations to consolidate and form a new corporation, was an act of incorporation of the new company; and the latter, upon its formation, became at once subject to the provisions of the general law of 1831, which declared that any act of incorporation subsequently passed should at all times thereafter "be liable to be amended, altered, or repealed at the pleasure of the legislature, in the same manner as if an express provision to that effect were therein contained, unless there shall have been inserted in such act of incor-

CORPORATIONS (*continued*).

poration an express limitation or provision to the contrary." So long as this provision remained unrepealed, subsequent legislation not repugnant to it was controlled by it, and is to be construed and enforced in connection with it. *Id.*

5. There being in the act of 1856 no limitation upon the power of amendment, alteration, and repeal, the State, by the reservation in the law of 1831, which is to be considered as if embodied in that act, retained the power to alter it in all particulars constituting the grant of corporate rights, privileges, and immunities to the new company formed under it. The existence of the corporation, and its franchises and immunities, derived directly from the State, were thus kept under its control. Rights and interests acquired by the company, not constituting a part of the contract of incorporation, stand upon a different footing. *Id.*

COSTS. See *Record*, 1, 2; *Tender*; *Trade-marks*, 5.

COTTON BRAIDS. See *Imports, Duty on*, 11, 12.

COUPONS. See *Municipal Bonds*, 1, 6.

1. The title to interest-coupons passes from hand to hand by mere delivery. A transfer of possession is presumptively a transfer of title, but does not import a guaranty of payment. *Ketchum* v. *Duncan*, 659.
2. The court, in considering the facts in this case, *holds* that the coupons of May and November, 1874, of the bonds of the Mobile and Ohio Railroad Company, represented as owned by Alexander Duncan, are existing liabilities of that company, protected by its first mortgage; and that they have no equity superior to that of the bonds from which they were taken, or of the subsequently maturing coupons. *Id.*

COURT AND JURY. See *Agent*.

1. The court reaffirms its former decisions, that a court is not bound to give instructions in the language in which they are asked. If those given sufficiently cover the case, and are correct, the judgment will not be disturbed. *Railway Company* v. *McCarthy*, 258.
2. The comments of the judge in his charge to the jury, as to the circumstances under which the defendant might be entitled to damages against the plaintiff, cannot be a ground of error, when there was no such issue, and when the defendant could not have been thereby prejudiced. *Walker* v. *Johnson*, 424.
3. The court is not bound, at the request of counsel, to give as instructions philosophical remarks copied from text-books, however wise or true they may be in the abstract, or however high the reputation of the authors. *Id.*
4. Where the record does not show that the finding of the jury is contrary to the instruction of the court, the presumption is that they followed it. *Gregory* v. *Morris*, 619.

COURT OF CLAIMS. See *Limitations, Statute of*, 1, 2; *Practice*, 1; *Witness*, 1–3.

A brewer paid to the collector of internal revenue $100 for special tax on his business from May 1, 1873, to April 30, 1874, for which a special tax stamp was given him. At the close of the year, it was found that he had manufactured less than five hundred barrels, and the Commissioner of Internal Revenue allowed his claim for the excess paid by him. Upon proper application to the treasury, payment of the amount so allowed was refused. *Held*, 1. That the allowance made by the commissioner, unless it be impeached in some appropriate form by the United States, is conclusive. 2. That the Court of Claims has jurisdiction of a suit by the brewer against the United States to recover the amount, and that he is entitled to judgment therefor. *United States* v. *Kaufman*, 567.

CRAPE VEILS. See *Imports, Duty on*, 1–3.

CRIMINAL LAW. See *Distilling*, 3; *Evidence*, 1; *Fine*, *Post-offices and Post-roads*.

1. An indictment under sect. 3266 of the Revised Statutes, charging the defendant with causing or procuring some other person to use a still, boiler, or other vessel, for the purpose of distilling, within the intent and meaning of the internal revenue laws of the United States, is bad, unless it states the name of such other person, or avers that the same is unknown. *United States* v. *Simmons*, 360.
2. An averment that such use was "in a certain building and on certain premises where vinegar was manufactured and produced" is not sufficient, as it does not state that vinegar was manufactured or produced there at the time the still and other vessels were used for the purpose of distilling. *Id.*
3. It is not necessary to aver that the spirits distilled were alcoholic. The allegation that the vessels were used "for the purpose of distilling, within the intent and meaning of the internal revenue laws of the United States," sufficiently advises the accused of the nature of the offence charged. *Id.*
4. The averment, that the defendant caused and procured the stills and other vessels to be used, implies, with sufficient certainty, that they were in fact used; and the nature of the means whereby their unlawful use was procured is matter of evidence to establish the imputed intent, and not of allegation in the indictment. *Id.*
5. In an indictment under sect 3281 of the Revised Statutes, charging that the defendant knowingly and unlawfully engaged in and carried on the business of a distiller, within the meaning of the internal revenue laws of the United States, with the intent to defraud the United States of the tax on spirits distilled by him, it is not necessary to state the particular means by which the fraud was effected.

CRIMINAL LAW (*continued*).

The intent being charged, the means are matters of evidence for the consideration of the jury. *Id.*

6. Under the second section of the act of Congress approved July 17, 1862 (12 Stat. 592), which declares that "no private corporation, banking association, firm, or individual shall make, issue, circulate, or pay out any note, check, memorandum, token, or other obligation, for a less sum than one dollar, intended to circulate as money, or to be received or used in lieu of lawful money of the United States," A was indicted for circulating obligations in the following form: —

"BANGOR, MICH., Aug. 15, 1874.

"The Bangor Furnace Company will pay the bearer, on demand, fifty cents, in goods, at their store, in Bangor, Mich.

(Signed) "A. B. HOUGH, *Pres.*
"CHAS. D. RHODES, *Treas.*"

The indictment charged that he intended them to circulate as money, and to be received and used in lieu of lawful money of the United States. *Held*, that as the obligations were payable in goods and not in money, and the sum of fifty cents was named merely as the limit of the value of the goods demandable, the indictment was bad on demurrer. *United States* v. *Van Auken*, 366.

CROSS-EXAMINATION. See *Witness*, 4.

CURRENCY. See *Judgment*.

DAMAGES. See *Contracts*, 16; *Court and Jury*, 2; *Trade-marks*, 5; *Utah*, *Code of Practice of*.

DEBTS.

1. A city, when it borrows money and promises to repay it with interest, cannot, by its own ordinances, under the guise of taxation, relieve itself from performing to the letter all that it has expressly promised to its creditors. *Murray* v. *Charleston*, 432.
2. Debts are not property. A non-resident creditor of a city cannot be said to be, in virtue of a debt which it owes him, a holder of property within its limits. *Id.*

DEBTS DUE LOYAL CITIZENS OF THE UNITED STATES BY PARTIES IN REBELLION.

Where property held by parties in the insurgent States, as trustees or bailees of loyal citizens, was forcibly taken from them, they may in some instances be released from liability, their release in such cases depending upon the same principles which control in ordinary cases of violence by an unlawful combination too powerful to be successfully resisted; but debts due such citizens, not being tangible things subject to seizure and removal, are not extinguished, by reason of the debtor's coerced payment of equivalent sums to an unlawful

DEBTS DUE LOYAL CITIZENS OF THE UNITED STATES BY PARTIES IN REBELLION (*continued*).

combination. They can only be satisfied when paid to the creditors to whom they are due, or to others by direction of lawful authority *Williams* v. *Bruffy*, 176.

DECREE. See *Confederate Notes*, 1; *Jurisdiction*, 5.

DEDICATION.

No particular form of words is required to the validity of a dedication. The assent of the owner, and the use of the premises for the purposes intended by the appropriation, are sufficient, and estop him from revoking the dedication. *Morgan* v. *Railroad Company*, 716.

DEED. See *Louisiana*; *Mortgage*.

DE FACTO GOVERNMENTS. See *Confederate States*, 4, 5.

DELIVERY. See *Contracts*, 1, 2.

DEMURRAGE. See *Contracts*, 3.

DEMURRER. See *Criminal Law*, 6; *Practice*, 2.

DEPOTS AND SIDE-TRACKS, CONSTRUCTION OF. See *Municipal Bonds*, 10.

DISHONORED PAPER. See *Municipal Bonds*, 1.

DISTILLING. See *Criminal Law*, 1–5; *Forfeiture*, 1.

1. A distiller of spirits is presumed to be acquainted with the utensils and machinery used in his business, and with their character and capacities. But the law does not attach culpability and impose punishment where there is no intention to evade its provisions, and the usual means to comply with them are adopted. *Felton* v. *United States*, 699.
2. All that the law requires of him, to avoid its penalties, is to use in good faith the ordinary means — by the employment of skilled artisans and competent inspectors — to secure utensils and machinery which will accomplish the end desired. If, then, defects exist, and the end sought be not attained, or defects in the utensils or machinery not then open to observation be subsequently discovered, he is not chargeable with "knowingly and wilfully" omitting to do what is required of him. *Id.*
3. Doing or omitting to do a thing "knowingly and wilfully" implies not only a knowledge of the thing, but a determination with an evil intent to do it or to omit doing it. *Id.*

DISTRICT OF COLUMBIA.

1. The act of Congress approved May 24, 1870 (16 Stat. 137), incorporating the National Savings Bank of the District of Columbia, does not authorize the creation of any corporate stock or capital. The profits of the institution, after deducting the necessary expenses of

DISTRICT OF COLUMBIA (*continued*).

conducting it, inure wholly to the benefit of the depositors, in dividends, or in a reserved surplus for their greater security. *Huntington* v. *Savings Bank*, 388.

2. The bond filed pursuant to the eleventh section of that act is in no sense capital owned by the bank or the corporators. It was required solely to secure depositors and creditors.

DUE PROCESS OF LAW. See *Constitutional Law*, 12, 13.

An assessment of certain real estate in New Orleans for draining the swamps of that city was resisted in the State courts, and by writ of error brought here, on the ground that the proceeding deprives the owner of his property without due process of law.

1. The origin and history of this provision of the Constitution, as found in Magna Charta, and in the fifth and fourteenth amendments to the Constitution of the United States, considered. *Davidson* v. *New Orleans*, 97.
2. The court suggests the difficulty and danger of attempting an authoritative definition of what it is for a State to deprive a person of life, liberty, or property without due process of law, within the meaning of the fourteenth amendment; and holds that the annunciation of the principles which govern each case as it arises is the better mode of arriving at a sound definition. *Id.*
3. This court has heretofore decided that due process of law does not in all cases require a resort to a court of justice to assert the rights of the public against the individual, or to impose burdens upon his property for the public use. *Murray's Lessee et al.* v. *Hoboken Land and Improvement Company*, 18 How. 272, and *McMillan* v. *Anderson*, 95 U. S. 37. *Id.*
4. In the present case, the court holds that it is due process of law, within the meaning of the Constitution, when the statute requires that such a burden, or the fixing of a tax or assessment before it becomes effectual, must be submitted to a court of justice, with notice to the owners of the property, all of whom have the right to appear and contest the assessment. *Id.*
5. Neither the corporate agency by which the work is done, the excessive price which the statute allows therefor, nor the relative importance of the work to the value of the land assessed, nor the fact that the assessment is made before the work is done, nor that the assessment is unequal as regards the benefits conferred, nor that personal judgments are rendered for the amount assessed, are matters in which the State authorities are controlled by the Federal Constitution. *Id.*

DUTY ON IMPORTS. See *Imports, Duty on.*

EJECTMENT. See *Limitations, Statute of*, 3–5.

EMBROIDERED LINEN GOODS. See *Imports, Duty on*, 21.

ENEMY, SALE OF LAND BY. See *Confiscation*, 1–7.

EQUITY. See *Mortgage*, 1–4; *Patents of the United States for Land*, 7; *Pleading*, 3, 4.

1. Equity will not regard a thing as done which has not been done, when it would injure third parties who have sustained detriment and acquired rights by what has been done. *Casey* v. *Cavaroc*, 467.
2. A. borrowed of a bank money on call, and deposited with it as collateral security certain mining stocks, with written authority to sell them at its discretion. The loan remaining unpaid, the bank notified him that, unless he paid it, the stocks would be sold. He failed, after repeated demands, to pay it, and they were sold, for more than their market value, to three directors of the bank, and the proceeds applied to the payment of the loan. A., who was advised of the sale, and that enough had been realized to pay his indebtedness, made no objection. The stocks were transferred to the purchasers. Nearly four years after the sale, the stocks having in the mean time greatly increased in value, A. notified the bank of his desire and purpose to redeem them, and subsequently filed his bill against it asserting his right so to redeem, and praying for general relief. *Held*, that he is entitled to no relief. *Hayward* v. *National Bank*, 611.

EQUITY OF REDEMPTION. See *Lands, Conveyance of*, 1–4; *Mortgage*, 1–4.

ESTATE FOR LIFE. See *Confiscation*, 7; *Grant*, 1–4.

ESTOPPEL. See *Contracts*, 2; *Dedication*; *Imports, Duty on*, 26; *Insurance*, 3; *Mortgage*, 3; *Municipal Bonds*, 15, 17.

1. Where a party gives a reason for his conduct and decision touching any thing involved in a controversy, he is estopped, after litigation has begun, from changing his ground and putting his conduct upon another and different consideration. *Railway Company* v. *McCarthy*, 258.
2. Where a party brings an action for a part only of an entire indivisible demand, and recovers judgment, he is estopped from subsequently bringing an action for another part of the same demand. *Baird* v. *United States*, 430.
3. The only case where a representation as to the future can operate as an estoppel is where it relates to the purposed abandonment of an existing right, and was intended to influence, and has influenced, the conduct of the party to whom it was made. A promise as to future action, touching a right dependent upon a contract to be thereafter entered into, does not create an estoppel. *Insurance Company* v. *Mowry*, 544.
4. The promise of an insurance company, that if a party will take out a policy he shall be notified when to pay the annual premiums before he shall be required to pay them, will not, although such notice is not given, estop the company from setting up the forfeiture which,

ESTOPPEL (*continued*).

according to the terms of the policy subsequently accepted, was incurred on the non-payment of the premium when due. *Id.*

5. Any agreement, declaration, or course of action on the part of an insurance company, which leads a party insured honestly to believe that by conforming thereto a forfeiture of his policy will not be incurred, followed by due conformity on his part, will estop the company from insisting upon the forfeiture, though it might be claimed under the express letter of the contract. *Insurance Company* v. *Eggleston*, 572.

6. An estoppel *in pais* can be set up only by a person who has been misled to his injury. *Ketchum* v. *Duncan*, 659.

7. A party is not permitted to deny a state of things which his conduct or misrepresentations led another to believe existed, and to act in accordance with that belief. *Morgan* v. *Railroad Company*, 716.

8. The doctrine of estoppel *in pais* always presupposes error on one side, and fault or fraud upon the other, and some defect of which it would be inequitable for the party against whom the doctrine is asserted to take advantage. *Id.*

EVIDENCE. See *Bill of Particulars, Burden of Proof; Contracts*, 11; *Criminal Law*, 4; *Imports, Duty on*, 18; *Insurance*, 6, 7; *Mortgage*, 1; *Pleading*, 1.

Where an information against a distillery and other property connected therewith, leased by the owner for the purpose of distilling, charges acts or omissions on the part of the lessee in carrying on the business of distilling while he was in possession, and with intent to defraud the revenue, the declarations of the lessee, voluntarily made subsequent to his arrest, are competent evidence against the owner to show the fraudulent intent of the lessee, as are also books, letters, memoranda, and bills of lading found on the premises in a room occupied by the latter. *Dobbins's Distillery* v. *United States*, 395.

EXECUTORY CONTRACT. See *Contracts*, 1, 2.

EXEMPLIFICATION. See *Patents of the United States for Land*, 3.

FEDERAL QUESTION. See *Jurisdiction*, 5.

FINE.

When a party is convicted of an offence, and sentenced to pay a fine, it is within the discretion of the court to order his imprisonment until the fine shall be paid. *Ex parte Jackson*, 727.

FLORIDA. See *Constitutional Law*, 5, 6.

FORECLOSURE. See *Lands, Conveyance of*, 3, 4; *Pleading*, 2.

FORFEITURE. See *Insurance*, 5–9, 13.

Where the owner of a distillery and other property connected therewith leased them for the purpose of distilling, the acts or omissions of the lessee in carrying on the business of distilling while he was

FORFEITURE (*continued*).

in possession, and with intent to defraud the revenue, although they are unknown to the owner, subject the distillery and such other property to forfeiture to the United States. *Dobbins's Distillery* v. *United States*, 395.

FORM, WHEN OF THE ESSENCE OF AN INVENTION. See *Letters-patent*, 1.

FRANCHISE. See *Corporations*, 2–5; *Grant*, 1–4.

FRAUD. See *Confederate States*, 6; *Municipal Bonds*, 4; *Patents of the United States for Land*, 7; *Trade-marks*, 1–3.

1. The United States cannot, against the claim of an innocent party, hold his money which has gone into its treasury by means of the fraud of its agent. *United States* v. *State Bank*, 30.
2. The rules of law applicable to an individual in a like case apply also to the United States. Its sovereignty is in no wise involved. *Id.*

FRAUDS, STATUTE OF.

1. A contract to pay to an attorney-at-law for his services in suits concerning land, if it be recovered, a specific sum of money out of the proceeds when it shall be sold by the client, is not void under the Statute of Frauds, because not in writing, for it may be performed within the year. *McPherson* v. *Cox*, 404.
2. A parol contract for the delivery of materials is not void under the Statute of Frauds, unless it appears affirmatively that it was not to be performed within a year. If performance by the promisor can be required by the promisee within a year, the contract is valid. *Walker* v. *Johnson*, 424.
3. A subsequent verbal agreement varying the manner of delivering them is binding. *Id.*
4. A purchaser's receipt and acceptance of goods sufficient to satisfy the Statute of Frauds may be constructive. *Garfield* v. *Paris*, 557.

FRAUDULENT PREFERENCE. See *Bankruptcy*, 2.

GENERAL AGENT. See *Insurance*, 2.

GOLD COIN. See *Confederate Notes*, 1; *Judgment*.

GOOD FAITH. See *Contracts*, 4; *Distilling*, 2.

GRANT. See *Patents of the United States for Land*, 1–4.

1. By analogy to the rule of the common law, that a grant to a natural person, without words of inheritance, creates only an estate for his life, a grant of a franchise, without words of perpetuity, to a corporation aggregate, whose duration is limited, creates only an estate for its life. *Turnpike Company* v. *Illinois*, 63.
2. By an act of the legislature of Illinois, approved Feb. 13, 1847, a turnpike company was created a body corporate, to continue as such for twenty-five years from that date, with power to construct and

GRANT (*continued*).

maintain a certain turnpike, erect toll-gates, and collect tolls The State reserved the right to purchase the road at the expiration of the charter, by paying to the corporation the original cost of construction; but the road, with all its appendages, was to remain in the possession of the corporation, to be used and controlled, subject to the rights and restrictions contained in the charter, until such time as the State should refund said cost. By a supplement passed in 1861, the company was authorized to extend its road; and, in consideration of keeping in repair a certain bridge and dyke, to use them as a part of the road, erect a toll-gate thereon, and collect tolls. The responsibility of the company did not, however, extend to the destruction of the dyke by high floods. *Held*, 1. That the provision whereby, on the failure of the State, at the expiration of twenty-five years, to refund the original cost of the road, the company was authorized to continue in the exercise of its franchises until they should be redeemed by paying such cost, extended only to the charter, and not to the supplement of 1861. 2. That the supplement merely granted to the company the use of the bridge and dyke, and that the franchise to charge tolls thereon was separate and distinct from that authorizing the collection of them on the original road, and did not extend beyond the term of years for which the corporation had been created. 3. That, at the expiration of that term, the State, by resuming the control of the bridge and dyke without compensation to the company, did not impair the obligation of her contract with the company. *Id.*

3. *Quære*, Whether, if the company had been authorized to construct the bridge and dyke, and had done so, or to acquire a proprietary interest in the property in fee, and had acquired it, the State could have taken back the property without just compensation. *Id.*

4. A grant of franchises and special privileges is to be construed most strongly against the donee and in favor of the public. *Id.*

5. The failure to record a patent of the United States for lands does not defeat the grant. *McGarrahan* v. *Mining Company*, 316.

GUARANTY. See *Coupons*, 1.

HARBOR IMPROVEMENTS. See *Jurisdiction*, 8.

HAT BRAIDS. See *Imports*, *Duty on*, 11, 12.

ILLINOIS. See *Grant*, 2, 3; *Limitations*, *Statute of*, 3–5.

A railroad corporation of Indiana, by a written contract of lease with a railroad corporation of Illinois, acquired the right and assumed the duty of managing and carrying on the business of the main line and a branch road of the latter company. The lease was confirmed by an act of the legislature of Illinois, which declared that said lessee should be a railroad corporation in the latter State, and possess as large powers as were possessed by the lessor, and such other powers

ILLINOIS (*continued*).

as are usual to railroad corporations. The State board for the equalization of taxes in Illinois made an assessment on the capital stock and franchises of the lessor corporation, over and above its tangible property, for the roads which passed from its control by virtue of the lease, and then assigned to the several counties so much of the assessment as was in the same proportion to the whole as the length of track within their respective limits bore to the entire length of the leased roads; the taxes due upon such assessment being charged to and to be collected from the company which, with the consent of the State, was entitled to have, and did have, exclusive control and management of such roads. *Held*, that the mode adopted by the State board was in substantial conformity to the laws of Illinois. *Railroad Company* v. *Vance*, 450.

IMMOVABLES, DELIVERY OF. See *Possession, Delivery of.*

IMPORTER, PROTEST OF. See *Imports, Duty on*, 26.

IMPORTS, DUTY ON. See *Burden of Proof.*

1. Veils manufactured of silk, and commercially known as "crape veils," and not otherwise, do not fall within the enumerating clause of the eighth section of the act of June 30, 1864 (13 Stat. 210), whereby "silk veils" are dutiable at sixty per cent *ad valorem*, but are within its concluding clause touching manufactures of silk, or of which silk is the component material of chief value, not otherwise provided for, and are, therefore, subject to a duty of fifty per cent *ad valorem*. *Arthur* v. *Morrison*, 108.
2. The designation of an article of commerce by merchants and importers, when it is clearly established, determines the construction of the tariff law when that article is mentioned. *Id.*
3. The intent of Congress to impose, under the act of 1864, duties upon imported articles according to their commercial designation, and to recognize this rule of construing statutes, is manifest from the first section of the act of Feb. 8, 1875 (18 Stat. 307), which subjects to a duty of sixty per cent "all goods, wares, and merchandise not herein otherwise provided for, made of silk, or of which silk is the component material of chief value, irrespective of the classification thereof for duty by or under previous laws, or of their commercial designation." *Id.*
4. The rules, that for the purpose of the tariff laws the commercial designation of an article among traders and importers, when clearly established, fixes its character, and that when Congress has designated an article by a specific name, and imposed a duty upon it, general terms in a subsequent act or a later part of the same act, although sufficiently broad to comprehend such article, are not applicable to it, are not deprived of their ordinary application by the expression "not otherwise provided for," in the eighth

IMPORTS, DUTY ON (*continued*).
section of the act of June 30, 1864 (13 Stat. 210). *Arthur* v. *Lahey*, 112.
5. The distinctions made by importers and traders between "silk laces" and "thread laces" have been plainly recognized by Congress, and have run through its acts for more than thirty years. *Id.*
6. Under the nineteenth section of the act of March 2, 1861 (12 Stat. 190), as amended by the sixth section of the act of July 14, 1862 (id. 550), thread laces are *eo nomine* subject to a duty of thirty per cent *ad valorem*. *Id.*
7. *Smythe* v. *Fiske* (23 Wall. 374) was not intended to overrule *Homer* v. *The Collector* (1 id. 486), *Reiche* v. *Smythe* (13 id. 162), or the cases referred to in them, nor was *Movius* v. *Arthur* (95 U. S. 144) understood to be in conflict with it. *Id.*
8. Those cases commented upon and explained. *Id.*
9. In 1873, certain gloves, commercially known as "silk plaited gloves," or "patent gloves," made on frames and manufactured in part of silk and in part of cotton, cotton being the component part of chief value, were imported at New York, upon which the collector imposed a duty of sixty per cent *ad valorem*, under the eighth section of the act of June 30, 1864 (13 Stat. 210). *Held*, that the articles did not come within the general terms of that section, because, 1st, they were not, by reason of their component materials, silk gloves; 2d, they were commercially known only as "plaited gloves," or "patent gloves;" and, 3d, they did not fall within the concluding clause, silk not being the component part of chief value. *Arthur* v. *Unkart*, 118.
10. Not being included in the act of 1864, the articles were dutiable under the twenty-second section of the act of March 2, 1861 (12 Stat. 191), and the thirteenth section of the act of July 14, 1862 (id. 556), where they are enumerated as gloves made on frames. *Id.*
11. The distinction between "cotton braids" and "other manufactures of cotton not otherwise provided for," and "hat braids," has been established and recognized by Congress by the acts of March 2, 1861 (12 Stat. 178), and July 14, 1862 (id. 543), and sect. 2504 of the Revised Statutes. *Arthur* v. *Zimmerman*, 124.
12. "Braids . . . used for making or ornamenting hats," being specifically enumerated in said acts of 1861 and 1862, are subject to the duty thereby prescribed, and not to that imposed by the sixth section of the act of June 30, 1864 (13 Stat. 209), upon "cotton braids, insertings, lace trimmings, or bobbinets, and all other manufactures of cotton not otherwise provided for." *Id.*
13 For tariff purposes, Congress has at all times, since the passage of the act of May 2, 1792 (1 Stat. 259), intended to preserve the distinction between "chocolate" and "confectionery." *Arthur* v. *Stephani*, 125.
14. Chocolate, *eo nomine*, is, by the first section of the act of June 6, 1872 (17 Stat. 231), dutiable at the rate of five cents per pound; and,

IMPORTS, DUTY ON (*continued*).

although put up in a particular form and sold as "confectionery," is not subjected to the duty imposed on the latter article by the first section of the act of June 30, 1864 (13 id. 202). *Id.*

15. The similitude clause of the act of Aug. 30, 1842 (5 Stat. 565), applies only to non-enumerated articles. *Arthur* v. *Sussfield*, 128.

16. In 1872 and 1873, a quantity of spectacles made of glass and steel were imported at New York, upon which the collector of the port, under the third section of the act of June 30, 1864 (13 Stat. 205), exacted a duty of forty-five per cent *ad valorem*. *Held*, that they were dutiable under the ninth section of that act, which imposes "on pebbles for spectacles and all manufactures of glass, or of which glass shall be a component material, not otherwise provided for," a duty of forty per cent *ad valorem*. *Id.*

17. "Nitro-benzole," being a manufacture from benzole and nitric acid, and a non-enumerated article, is subject to duty under the twentieth section, known as the similitude clause, of the act of Aug. 30, 1842 (5 Stat. 565), which provides that "on all articles manufactured from two or more materials the duty shall be assessed at the highest rates at which any of its component parts may be chargeable," and not under the fifth section of the act of July 14, 1862 (12 id. 548), which imposes a duty of fifty per cent *ad valorem* on "essential oils not otherwise provided for." *Murphy* v. *Arnson*, 131.

18. Evidence tending to show that a non-enumerated article "resembles essential oil in the uses to which it is put, as a marketable commodity, more than any thing else," falls short of the requisition of the act of Aug. 30, 1842, *supra*, which provides that "on each and every non-enumerated article which bears a similitude in . . . the use to which it may be applied, to any enumerated article chargeable with duty," there shall be levied, collected, and paid "the same rate of duty which is levied and charged on the enumerated article which it most resembles." *Id.*

19. The duty on braces and suspenders is, *eo nomine*, fixed by the twenty-second section of the act of March 2, 1861 (12 Stat. 191), and the thirteenth section of the act of July 14, 1862 (id. 556). *Arthur* v. *Davies*, 135.

20. Merchandise technically and commercially known as braces and suspenders is subject to the duty imposed upon them, although it would otherwise fall under the general designation applicable to other articles. *Id.*

21. The duty imposed on embroidered linen goods by the twenty-second section of the act of March 2, 1861 (12 Stat. 192), is not reconsidered in the seventh section of the act of June 30, 1864 (13 id. 209), but remains as fixed by the former act. *Arthur* v. *Homer*, 137.

22. In 1872, A. imported certain goods manufactured of cattle-hair and cotton, the latter not being the component part of chief value. *Held*, that, under the last paragraph of the sixth section of the act of June

IMPORTS, DUTY ON (*continued*).

30, 1864 (13 Stat. 209), they were subject to a duty of thirty-five per cent *ad valorem*. *Arthur* v. *Herman*, 141.

23. The rule that an article, dutiable by its specific designation, will not be affected by the general words of the same or another statute, which would otherwise embrace it, applies as well to statutes reducing duties as to those increasing them. *Arthur* v. *Rheims*, 143.

24. As the twelfth section of the act of June 30, 1864 (13 Stat. 213), imposes a duty of fifty per cent *ad valorem* upon artificial flowers *eo nomine*, they are not subject to the deduction of ten per cent allowed by the second section of the act of June 6, 1872 (17 id. 231), "on all manufactures of cotton of which cotton is the component part of chief value." *Id.*

25. The plaintiffs below entered an importation of goods upon the following invoice:—

Bought	Fr's	8,670.25
Discount for cash on gross amount, two per cent, 8,766.60 .		175.30
	Fr's	8,494.95

Terms cash. If not paid, interest to be added at the rate of six per cent.

As cash had not been paid, the two per cent discount was disallowed by the appraisers. The collector thereupon fixed the value of the goods as of the invoice price at 8,670.25 francs, and exacted duty thereon, although the actual market value of the goods in the country of exportation was 8,494.95 francs. *Held*, that the latter sum was also the invoice value, and that the duty on the two per cent was improperly exacted. *Arthur* v. *Goddard*, 145.

26. An importer, having set forth in his written protest the ground of his objection to the payment of customs duties exacted by the collector, cannot, in his suit against the latter, recover them upon any ground other than that so set forth. *Davies* v. *Arthur*, 148.

27. The joint resolution of March 2, 1867 (14 Stat. 571), repealing that portion of the fifth section of the act approved June 30, 1864 (13 id. 208), which subjected to a duty of ten per cent *ad valorem* "lastings, mohair cloth, silk, twist, or other manufacture of cloth, woven or made in patterns of such size, shape, and form, or cut in such manner, as to be fit for shoes, slippers, boots, bootees, gaiters, and buttons exclusively, not combined with india-rubber," did not revive the provision in the twenty-third section of the act of March 2, 1861 (12 id. 195), which placed such articles on the free list. *Kohlsaat* v. *Murphy*, 153.

28. Patterns imported in 1870, made of cotton canvass cut into strips of the size and shape for slippers, more or less embroidered with worsted and silk, were dutiable under the last paragraph of the sixth section of the act of June 30, 1864 (13 Stat. 209), which imposes a duty of thirty-five per cent *ad valorem* on "manufactures of cotton not otherwise provided for." *Id.*

IMPRISONMENT. See *Fine*.

INDEMNITY. See *Confederate States*, 6.

INDICTMENT. See *Criminal Law*, 1–6.

INFRINGEMENT. See *Letters-Patent*, 2; *Trade-marks*, 3–5.

INJUNCTION. See *Pleading*, 4; *Trade-marks*.

Except in cases arising under the bankrupt law, a court of the United States cannot enjoin a party from proceeding in a State court. *Dial* v. *Reynolds*, 340.

INSOLVENCY. See *Bankruptcy*, 2.

INSTRUCTIONS. See *Court and Jury*, 1–3.

INSURANCE. See *Bottomry and Respondentia*.

1. An insurance company cannot hold out a person as its agent, and then disavow responsibility for his acts. Persons dealing with him in the particular business for which he was appointed have a right to rely upon the continuance of his authority, until in some way informed of its revocation. *Insurance Company* v. *McCain*, 84.
2. Unless instructions limiting the authority of a general agent of an insurance company, whose powers would otherwise be coextensive with the business intrusted to him, are communicated to the party with whom he deals, the company is bound to the same extent as though such special instructions had not been given. *Id.*
3. The receipt, without objection, by an insurance company of a statement from a person who had been acting as its agent, that the premium for the renewal of a policy had been paid to him, and its failure then to notify the assured that the powers of the agent had terminated, is equivalent to an adoption of the act of the agent, and estops the company, when sued on the policy, from denying his authority. *Id.*
4. An insurance company may waive any condition of a policy inserted therein for its benefit. *Insurance Company* v. *Norton*, 234.
5. As the company may at any time, at its option, give authority to its agents to make agreements, or to waive forfeitures, it is not bound to act upon the declaration in its policy that they have no such authority. *Id.*
6. Whether it has or has not exercised that option is a fact provable by either written evidence or by parol. *Id.*
7. As denoting the power given by an insurance company to a local agent, evidence is admissible as to its practice in allowing him to extend the time for the payment of premiums and premium notes; and the jury, upon such evidence, may find whether he was authorized to make such an extension, and, if so, whether it was in fact made in the case on trial. *Id.*
8. In this case, the court holds that the fact that the premium note was already past due when the agreement to extend it was made, is not

INSURANCE (*continued*).

sufficient to prevent that agreement from operating as a waiver of the forfeiture. *Id.*

9 The promise of an insurance company, that if a party will take out a policy he shall be notified when to pay the annual premiums before he shall be required to pay them, will not, although such notice is not given, estop the company from setting up the forfeiture which, according to the terms of the policy subsequently accepted, was incurred on the non-payment of the premium when due. *Insurance Company* v. *Mowry*, 544.

10. The policy issued by the company and accepted by the assured must, in a court of law, be taken as expressing the final agreement of the parties, and as merging all previous verbal stipulations. *Id.*

11. The court in this case holds that the authority of the local agent of the company was limited to countersigning the policy and receiving the premiums. *Id.*

12. Any agreement, declaration, or course of action on the part of an insurance company, which leads a party insured honestly to believe that by conforming thereto a forfeiture of his policy will not be incurred, followed by due conformity on his part, will estop the company from insisting upon the forfeiture, though it might be claimed under the express letter of the contract. *Insurance Company* v. *Eggleston*, 572.

13. A policy of insurance, issued by a New York company upon the life of A., who resided at Columbus, Miss., stipulated, that if the premiums were not paid at the appointed dates the company should not be liable, that all receipts for them were to be signed by the president and actuary, and that agents were not authorized to make, alter, or discharge contracts, or waive forfeitures. After the policy was issued, the company discontinued its agency at Columbus, and from time to time, as the premiums became due, notified A. by mail where and to whom to pay them. No notice as to the premium due Nov. 11, 1871, having been received by him, it was ascertained, by inquiry of the agents at Savannah, Ga., and Vicksburg, Miss., to whom payment had formerly been made, that the sub-agent at Macon, Miss., held the receipt. Payment was tendered him Dec. 30; but he refused to accept it, unless a certificate of A.'s health was furnished. A. died Jan. 5, 1872. The company, when sued, set up the forfeiture of the policy by reason of the non-payment of the premium on the day it was due. *Held*, that A., in view of the company's dealings with him, had reasonable cause to expect, and rely on, receiving notice where and to whom to pay the premium, and that the company was estopped from setting up that the policy was forfeited by the non-payment, on Nov. 11, of the premium then due. *Id*

14. *Insurance Company* v. *Davis* (95 U. S. 452), and *New York Life Insurance Company* v. *Statham et al.* (93 id. 24), commented on and distinguished from this case. *Id.*

INTENT. See *Criminal Law; Distilling, Evidence*, 1; *Forfeiture*.

INTEREST. See *Municipal Bonds*, 6, 11, 12; *Tender*.

When at the place of contract the rate of interest differs from that at the place of payment, the parties may stipulate for either rate, and the contract will govern. *Cromwell* v. *County of Sac*, 51.

INTERNAL IMPROVEMENTS. See *Municipal Bonds*, 7.

INTERNAL REVENUE. See *Criminal Law*, 1–6.

INVENTION. See *Letters-patent*, 1.

IOWA.

Under the law of Iowa, municipal bonds of that State, drawing ten per cent interest before maturity, draw the same interest thereafter, and matured coupons attached to them draw six per cent. Judgments there rendered upon such bonds and coupons draw interest on the amount due on the bonds at the rate of ten per cent a year, and on that due on the coupons at the rate of six per cent a year. *Cromwell* v. *County of Sac*, 51.

JUDGMENT. *See Bankruptcy*, 2; *Confederate Notes*, 1.

Where a party entitled to recover a certain amount in gold coin, takes, with the approbation of the court, a judgment which may be discharged in currency, the judgment should be for a sum equivalent in value to the specified amount of that coin as bullion. *Gregory* v. *Morris*, 619.

JUDGMENT BY DEFAULT. See *Jurisdiction*, 1; *Practice*, 2, 3.

JUDGMENT CREDITOR. See *Limitations, Statute of*, 1–3.

JUDGMENTS, INTEREST ON. See *Municipal Bonds*, 6.

JURISDICTION. See *Appeal*, 4; *Confiscation*, 1–7; *Removal of Causes*, 2.

I. Of the Supreme Court.

1. This court has no power to re-examine the action of a territorial court in refusing to set aside a judgment by default. *McAllister* v. *Kuhn*, 87.
2. Any enactment, from whatever source originating, to which a State gives the force of law, is a statute of the State, within the meaning of the act regulating the appellate jurisdiction of this court over the judgments and decrees of the State courts. *Williams* v. *Bruffy*, 176.
3. Where Congress has, in the exercise of its lawful authority, inaugurated or adopted a system for the improvement of a harbor, and is, by appropriating the public moneys, carrying it out, this court has no authority to prescribe the manner in which the work shall be conducted, or to forbid its completion, or to require the undoing of that which has been done. *Wisconsin* v. *Duluth*, 379.
4. Wherever rights, acknowledged and protected by the Constitution of the United States, are denied or invaded by State legislation, which is sustained by the judgment of a State court, this court is author-

JURISDICTION (*continued*).

ized to interfere. Its jurisdiction, therefore, to re-examine such judgment cannot be defeated by showing that the record does not in direct terms refer to some constitutional provision, nor expressly state that a Federal question was presented. The true jurisdictional test is, whether it appears that such a question was decided adversely to the Federal right. *Murray* v. *Charleston*, 432.

5. A decree dismissing a bill in chancery brought to recover a debt and set aside an alleged fraudulent sale of property, was, on appeal, reversed, and a decree rendered by the Supreme Court of the State against the appellee for the amount of the debt, and an execution awarded. Thereupon the appellee, who, pending the appeal, and more than three years before the date of the decree, had obtained a discharge in bankruptcy, petitioned the Supreme Court to set aside its decree, and either permit him to plead his discharge there, or remand the cause, so that he might plead it in the inferior court. The court, upon the ground that no new defence could be made there, refused the petition, and permitted the decree to stand as entered. *Held*, 1. That upon the face of the record proper no Federal question was raised. 2. That the action upon the subsequent petition did not place the petitioner in a better position to invoke the jurisdiction of this court. *Wolf* v. *Stix*, 541.

6. This court has jurisdiction of an appeal from the final decree of the Circuit Court confirming a sale made under the order of that court. *Sage* v. *Railroad Company*, 712.

7. After the term at which such final decree was rendered, any justice of this court may, within the time prescribed by law, allow an appeal, and approve the bond which is to operate as a *supersedeas*. *Id.*

II OF THE CIRCUIT COURTS.

8. A foreign insurance company was doing business in Pennsylvania under a license granted pursuant to a statute, which, among other things, provided that the company should file a written stipulation, agreeing that process issued in any suit brought in any court of that Commonwealth having jurisdiction of the subject-matter, and served upon the agent specified by the company to receive service of process for it, should have the same effect as if personally served upon the company within the State. Suit was brought in the Circuit Court of the United States for the Eastern District of Pennsylvania by a citizen of that State against the company, and process served, in accordance with the State law, upon its agent so specified, who resided within the district. The service of the process was quashed, because the company was not an inhabitant of or found within the district. *Held*, 1. That the Circuit Court has jurisdiction of the suit, and should proceed to hear and determine it. 2. That said court is a court of the Commonwealth, within the intent of the statute. *Ex parte Schollenberger*, 369.

JURISDICTION (*continued*).

III. In General.

9. Except in cases arising under the bankrupt law, a court of the United States cannot enjoin a party from proceeding in a State court. *Dial* v. *Reynolds*, 340.

JUROR.

A juror in a civil action who, on his *voire dire*, expresses an entire willingness, as well as ability, to accept the facts as they shall be developed by the evidence, and return a verdict in accordance with them, is not rendered incompetent by having previously conversed with a person about the case, and received an impression in relation to the facts. *Gold-Mining Company* v. *National Bank*, 640.

KANSAS. See *Municipal Bonds*, 10–14.

LACHES. See *Trade-marks*, 5.

LAND DEPARTMENT. See *Patents of the United States for Land*, 5–7.

LANDS, CONVEYANCE OF.

1. The laws of the State in which land is situated control exclusively its descent, alienation, and transfer, and the effect and construction of instruments intended to convey it. *Brine* v. *Insurance Company*, 627.
2. All such laws in existence when a contract in regard to real estate is made, including the contract of mortgage, enter into and become a part of such contract. *Id.*
3. A State statute, therefore, which allows to the mortgagor twelve months to redeem, after a sale under a decree of foreclosure, and to his judgment creditor three months after that, governs to that extent the mode of transferring the title, and confers a substantial right, and thereby becomes a rule of property. *Id.*
4. This right of redemption after sale is, therefore, as obligatory on the Federal courts sitting in equity, as on the State courts; and their rules of practice must be made to conform to the law of the State, so far as may be necessary to give full effect to the right. *Id.*

LEGAL-TENDER CURRENCY. See *Confederate Notes*, 1, 2.

LETTERS-PATENT.

1. Form, when of the essence of an invention, is necessarily material; and, if it be inseparable from the successful operation of the machine, the attainment of the same object by a machine different in form is not an infringement. *Werner* v. *King*, 218.
2. The use by Robert Werner, under letters-patent No. 134,621, for crimping and fluting machines, issued to him Jan. 7, 1873, of the detent, or finger, in combination with fluting-rollers to produce crinkles or puffings, is not an infringement of the double-plated semi-cylinder guides covered by reissued letters-patent No. 3000, granted to George E. King, June 23, 1868. *Id.*

LETTERS-PATENT (*continued*).

3. Letters-patent No. 133,536, granted Dec. 3, 1872, to William Johnson, for an improvement in wrenches, do not infringe reissued letters-patent No. 5026, granted Aug. 6, 1872, to John Lacey and George B. Cornell, for an improvement in wrenches for extracting bung-bushes. *Schumacher* v. *Cornell*, 549.
4. The doctrine of mechanical equivalents has no application to this case. *Id.*

LEX FORI. See *Contracts*, 5.

LEX LOCI CONTRACTUS. See *Contracts*, 5.

LEX LOCI REI SITÆ. See *Lands*, *Conveyance of*, 1-4.

LIEN. See *Limitations*, *Statute of*, 3-5; *Trustee*.

The rule of the common law, that the lien of the vendor of personal property, to secure the payment of purchase-money, is lost by the voluntary and unconditional delivery of the property to the purchaser, does not prevent the parties from contracting for a lien which, as between themselves, will be good after delivery. *Gregory* v. *Morris*, 619.

LIFE-ESTATE. See *Confiscation*, 7; *Grant*, 1-4.

LIFE INSURANCE. See *Insurance*, 1-8, 13.

LIMITATIONS, STATUTE OF. See *Resulting Trust*, 1, 2.

1. The statute of limitation of suits in the Court of Claims (Rev. Stat., sect. 1069) is not applicable to a suit under sects. 1059-1062, because such a suit is brought to establish, not a claim in the just sense of that word, but a peculiar defence to a cause of action of the United States against the petitioner; and so long as the United States neglects to bring suit to establish that cause of action, so long must he be allowed to set up any defence thereto not in itself a separate demand. *United States* v. *Clark*, 37.
2. The petitioner's right to sue in the Court of Claims did not accrue until the accounting officers held him liable for the sum lost, by refusing to credit his account therewith; and their final action was within six years before this suit was brought. *Id.*
3. The Statute of Limitations applicable to the action of ejectment has no relation to the lien of a judgment creditor on the lands, though the judgment debtor may sell and convey them with possession to the party setting up the statute. *Pratt* v. *Pratt*, 704.
4. That statute does not begin to run in such case until the lands have been sold under an execution sued out on the judgment, and the purchaser of them becomes entitled to a deed; because, until then, there is no right of entry or of action against the party so in possession. *Id.*

LIMITATIONS, STATUTE OF (*continued*).

5. That statute begins to run against the judgment creditor only when he is such purchaser, and can bring ejectment. These propositions are applicable to the statute of Illinois of 1835 limiting actions for the recovery of land to seven years. *Id.*

LOUISIANA. See *Confiscation*, 6, 7; *Pledge*.

1. An actual delivery of immovables in Louisiana is not essential to the validity of a sale of them made by public act before a notary. The law of the State considers the tradition or delivery of the property as accompanying the act. *Conrad* v. *Waples*, 279.
2. In Louisiana, a conveyance of lands is valid between the parties without registration, and passes the title. The only consequence of a failure of the purchaser to place his conveyance on the records of the parish where the lands are situated is that he is thereby subjected to the risk of losing them if they be again sold or hypothecated by his vendor to an innocent third party, or if they be seized and sold by a creditor of his vendor for the latter's debts. *Burbank* v. *Conrad*, 291.

MAGNA CHARTA. See *Due Process of Law*, 1–5.

MAILS. See *Post-offices and Post-roads*.

MAINE. See *Corporations*, 2–5.

MANDATE. See *Practice*, 5.

MANUFACTURES OF CATTLE-HAIR AND COTTON. See *Imports*, *Duty on*, 22.

MARRIAGE.

1. A marriage valid at common law is valid, notwithstanding the statutes of the State where it is contracted prescribe directions respecting its formation and solemnization, unless they contain express words of nullity. *Meister* v. *Moore*, 76.
2. This court adopts, as an authoritative declaration of the law of Michigan, the ruling of the Supreme Court of that State in *Hutchins* v. *Kimmell* (31 Mich. 126), that, notwithstanding the statutory regulations have not been complied with, a marriage contracted there *per verba de præsenti* is valid. *Id.*

MECHANICAL EQUIVALENTS. See *Letters-patent*, 4.

MICHIGAN. See *Contracts*, 18; *Marriage*.

MILITARY AND POST ROADS. See *Constitutional Law*, 3, 4.

MISJOINDER. See *Pleading*, 2.

MISSOURI. See *Municipal Bonds*, 17.

MOBILE AND OHIO RAILROAD COMPANY. See *Coupons*, 2.

MORTGAGE. See *Lands, Conveyance of; Pleading*, 2.

1 A deed of lands, absolute in form, when executed as security for a loan of money, will in equity be treated as a mortgage; and evidence, written or oral, tending to show the real character of the transaction is admissible. *Peugh* v. *Davis*, 332.

2. An equity of redemption is so inseparably connected with a mortgage, that it cannot be waived or abandoned by any stipulation of the parties made at the time, even if embodied in the mortgage. *Id.*

3. A subsequent release of the equity of redemption to the mortgagee must appear by a writing importing in terms a transfer of the mortgagor's interest, or such facts be shown as will estop him from asserting any interest in the premises; and it must be for an adequate consideration. *Id.*

4. In determining whether a transaction was intended to operate as such release, the fact that the then value of the property was greatly in excess of the amount paid, and of that originally secured, and the fact that the mortgagor retained possession and subsequently enclosed and cultivated the land, are strong circumstances tending to show that a release was not intended. *Id.*

5. Where a deed, absolute in form, was made as security for a loan, papers thereafter executed, which refer to the transaction as one of purchase, will be considered in connection with the deed, and will not be regarded in a court of equity as any more conclusive of a subsequent release than the form of the original instrument was of a sale of the property. *Id.*

MULTIFARIOUSNESS. See *Pleading*, 2.

MUNICIPAL BONDS. See *Contracts*, 14; *Texas, Constitution of.*

1. An overdue and unpaid coupon for interest, attached to a municipal bond which has several years to run, does not render the bond and the subsequently maturing coupons dishonored paper, so as to subject them, in the hands of a purchaser for value, to defences good against the original holder. *Cromwell* v. *County of Sac*, 51.

2. A *bona fide* purchaser of negotiable paper for value, before maturity, takes it freed from all infirmities in its origin, unless it is absolutely void for want of power in the maker to issue it, or its circulation is by law prohibited by reason of the illegality of the consideration. Municipal bonds, payable to bearer, are subject to the same rules as other negotiable paper. *Id.*

3. Though he may have notice of infirmities in its origin, a purchaser of a municipal bond from a *bona fide* holder, who obtained it for value before maturity, takes it as freed from such infirmities as it was in the hands of such holder. *Id.*

4. A purchaser of negotiable securities before their maturity, whatever may have been their original infirmity, can, unless he is personally chargeable with fraud in procuring them, recover against the maker

MUNICIPAL BONDS (*continued*).

the full amount of them, though he may have paid therefor less than their par value. *Id.*

5. When, at the place of contract, the rate of interest differs from that at the place of payment, the parties may stipulate for either rate, and the contract will govern. *Id.*

6. Under the law of Iowa, municipal bonds in that State drawing ten per cent interest before maturity draw the same interest thereafter, and matured coupons attached to them draw six per cent. Judgments there rendered upon such bonds and coupons draw interest on the amount due on the bonds at the rate of ten per cent a year, and on that due on the coupons at the rate of six per cent a year. *Id.*

7. A bridge intended for and used as a thoroughfare is a public highway, and hence a work of internal improvement, within the meaning of the act of Nebraska, passed Feb. 15, 1869, authorizing cities, counties, and precincts in that State to issue bonds in aid of works of internal improvement. *County Commissioners* v. *Chandler*, 205.

8. The fact that the bridge, in aid of the construction of which the bonds were issued, was built as a toll-bridge, and is used as such, does not affect their validity in the hands of a *bona fide* holder for value before maturity. *Id.*

9. A county subscribed for stock of a railroad corporation, and issued bonds in payment therefor, pursuant to a law which authorized a levy of a special tax to pay them, "not to exceed one-twentieth of one per cent upon the assessed value of taxable property for each year," but contained no provision that only the fund so derived should be applied to their payment. *Held*, that the bonds are debts of the county as fully as any other of its liabilities, and that for any balance remaining due on account of principal or interest after the application thereto of the proceeds of such tax the holders of them are entitled to payment out of the general funds of the county. *United States* v. *County of Clark*, 211.

10. The act of the legislature of Kansas, entitled "An Act to authorize counties, incorporated cities, and municipal townships to issue bonds for the purpose of building bridges, aiding in the construction of railroads, water-power, or other works of internal improvement, and providing for the registration of such bonds, and the repealing of all laws in conflict therewith," approved March 2, 1872 (c. 68, Laws of Kansas, 1872, p. 110), authorizes a township to issue its bonds to aid in constructing within its limits the depots and side-tracks of an existing railroad. *Township of Rock Creek* v. *Strong*, 271.

11. The provisions of that act, that the bonds shall be payable in not less than five, nor more than thirty years from the date thereof, with interest not to exceed ten per cent per annum, all in the discretion of the officers issuing the same, are directory, and not of the essence of the power to issue. *Id.*

12. Certain municipal bonds, dated Sept. 10, 1872, and payable thirty

MUNICIPAL BONDS (*continued*).

years from Oct. 15, 1872, with interest thereon at the rate of seven per cent per annum, payable semi-annually on the fifteenth days of April and October of each year, were registered by the auditor of the State, Oct. 17, 1872. *Held*, that their legal effect is precisely what it would have been had the date inserted been Oct. 15, instead of Sept. 10, 1872. *Id.*

13. The action of the persons or the tribunal authorized by law to determine the result of an election held for the purpose of ascertaining whether a municipal township shall issue its bonds in aid of an object authorized by law is conclusive, and a *bona fide* purchaser of the bonds is under no obligation to look beyond it. *Id.*

14. A municipal bond, on the back of which is indorsed the certificate of the auditor of the State that it has been duly registered in his office according to law, is not invalid because he failed to make in his office an entry of his action. *Id.*

15. Certain bonds or securities issued by the city of San Antonio, March 1, 1852, recite that "this debt is authorized by a vote of the electors of the city of San Antonio, taken in accordance with the provisions of an act to incorporate the San Antonio and Mexican Gulf Railroad Company, approved Sept. 5, 1850," &c. *Held*, that the city is estopped from denying the verity of the recital, and that the bonds or securities are valid in the hands of a *bona fide* purchaser for value before maturity. *San Antonio* v. *Mehaffy*, 312.

16. The fact that the principal securities delivered to that company were not sealed is immaterial, because the act under which they were issued expressly authorized those charged with the duty of making the subscription to "issue bonds bearing interest, or otherwise pledge the faith of the city." *Id.*

17. Pursuant to a power conferred in the charter of A., a railroad company, a county court of Missouri subscribed, in the year 1860, for stock, and agreed to issue county bonds in payment therefor. Under the authority of an act of the General Assembly of that State, passed in the year 1864, A., by a vote of a majority in interest of its stockholders, said county court voting with said majority, transferred all the assets, rights, and privileges of its charter, and all the work done thereunder, to a company, B. C. was, under the general railroad law, organized as a corporation for constructing a railroad which passed through the county; and an agreement was made, in 1868, between B., C., and the county court, by which the subscription was released, and, in consideration of such release, that court subscribed for the same amount of stock in C., and issued county bonds in payment therefor. The county, by this arrangement, secured, with increased railroad facilities, a road in all material respects the same as that desired and originally contemplated; and it received and still retains the requisite certificates of stock. The county court levied and collected the tax to pay the interest due on the bonds for the years

MUNICIPAL BONDS (*continued*).

1869, 1870, 1871, 1872, and 1873; but, in August of the last-mentioned year, directed that the payment of the interest thereunder should be withheld. Suit was brought against the county by a *bona fide* holder of the coupons, who purchased the same for value before their maturity. *Held*, 1. That B. acquired a vested right to demand and receive the bonds of the county in payment of the original subscription to A.; and that such right was not defeated or impaired by the Constitution of Missouri of 1865. 2. That the agreement made in 1868 is not, as against such holder, subject to the objection that a majority of the qualified voters of the county had not, at a general or special election, expressed their assent to the subscription of stock in C. 3. That the tax-payers are concluded by the act of the county court, and by their own failure to assert, by appropriate proceedings, their legal rights, if any they ever had, to prevent the transfer of the original subscription from one company to the other. *County of Ray* v. *Vansycle*, 675.

NATIONAL BANK. See *Usury*.

A defendant sued by a national bank for moneys it loaned him cannot set up as a bar that they exceeded in amount one-tenth part of its capital stock actually paid in. *Gold-Mining Company* v. *National Bank*, 640.

NEBRASKA. See *Municipal Bonds*, 7, 8.

NEGOTIABLE PAPER OR SECURITIES See *Municipal Bonds*, 2–4; *Pledge*, 5–7.

NEW YORK. See *Contracts*, 18.

NITRO-BENZOLE. See *Imports, Duty on*, 17.

NON-ENUMERATED ARTICLES. See *Imports, Duty on*, 15.

"NOT OTHERWISE PROVIDED FOR." See *Imports, Duty on*, 4.

OBLIGATION OF CONTRACTS. See *Constitutional Law*, 7–9, 14; *Grant*, 2, 3.

PAROL CONTRACT. See *Contracts*, 18; *Frauds, Statute of*, 1–3.

PARTIES. See *Confederate States*, 6; *Pleading*, 2; *Witness*, 3.

PATENT GLOVES. See *Imports, Duty on*, 9, 10.

PATENTS OF THE UNITED STATES FOR LAND.

1. The statutory provisions prescribing the manner in which a patent of the United States for land shall be executed are mandatory. No equivalent for any of the required formalities is allowed; but each of the integral acts to be performed is essential to the perfection and validity of such an instrument. If, therefore, it is not actually countersigned by the recorder of the General Land-Office in person, or, in his absence, by the principal clerk of private land claims as acting recorder, it is not executed according to law, and does not

PATENTS OF THE UNITED STATES FOR LAND (*continued*).
pass the title of the United States. *McGarrahan* v. *Mining Company*, 316.

2. The record in the volume kept for that purpose at the General Land-Office at Washington, of a patent which has been executed in the manner which the law directs, is evidence of the same dignity and is subject to the same defences as the patent itself. If the instrument, as the same appears of record, was not so executed, and was therefore insufficient on its face to transfer the title of the United States, the record raises no presumption that a patent duly executed was delivered to and accepted by the grantee. *Id.*
3. The act of March 3, 1813 (5 Stat. 627), in relation to exemplifications of records, does not dispense with the provisions of law touching the signing and countersigning. The record, to prove a valid patent, must still show that they were complied with. The names need not be fully inserted in the record; but it must appear in some form that they were actually signed to the patent when it was issued. *Id.*
4. The failure to record a patent does not defeat the grant. *Id.*
5. A patent for public land, when issued by the Land Department, acting within the scope of its authority, and delivered to and accepted by the grantee, passes the legal title to the land. All control of the Executive Department of the government over the title thereafter ceases. *Moore* v. *Robbins*, 530.
6. If there be any lawful reason why the patent should be cancelled or rescinded, the appropriate remedy is by a bill in chancery, brought by the United States; but no executive officer is authorized to reconsider the facts on which it was issued, and to recall or rescind it, or to issue one to another party for the same tract. *Id.*
7. But when fraud or mistake or misconstruction of the law of the case exists, the United States, or any contesting claimant for the land, may have relief in a court of equity. *Id.*

PATTERNS FOR SLIPPERS, SHOES, &c. See *Imports, Duty on*, 27, 28.

PENNSYLVANIA. See *Jurisdiction*, 8; *Resulting Trust.*

PERSONAL JUDGMENT. See *Due Process of Law*, 5.

PLEADING. See *Bankruptcy*, 1; *Confederate States*, 6; *Criminal Law, Removal of Causes; Specific Performance; Usury.*

1. A declaration in an action for the wrongful conversion of the shares of the capital stock of a corporation is sufficient for the purposes of pleading, if it states the ultimate fact to be proven. The circumstances which tend to prove that fact can be used for the purposes of evidence; but they have no place in the pleadings. *McAllister* v. *Kuhn*, 87.
2. A bill of foreclosure is bad for misjoinder of parties and for multifariousness, where persons are made defendants thereto who claim

PLEADING (*continued*).

title adversely to the mortgagor and the complainant, and the latter seeks in that suit to litigate and settle his rights. *Dial* v. *Reynolds*, 310.

3. The rule at law that the pendency of a former action between the same parties for the same cause is pleadable in abatement to a second action, provided the actions be in courts of the same State, holds in equity. *Insurance Company* v. *Brune's Assignee*, 588.
4. The plea of a former suit pending in equity for the same cause in a foreign jurisdiction will not abate an action at law in a domestic tribunal, or authorize an injunction against prosecuting such action. *Id.*
5. A defendant sued by a national bank for moneys it loaned him, cannot set up as a bar that they exceeded in amount one-tenth part of its capital stock actually paid in. *Gold-Mining Company* v. *National Bank*, 640.

PLEDGE.

1. Possession is of the essence of a pledge; and, without it, no privilege can exist as against third persons. *Casey* v. *Cavaroc*, 467.
2. This doctrine is in accordance with both the common and the civil law, the Code Napoleon (art. 2076) and the Civil Code of Louisiana (art. 3162). *Id.*
3. The thing pledged may be in the temporary possession of the pledgor as special bailee, without defeating the legal possession of the pledgee; but where it has never been out of the pledgor's actual possession, and has always been subject to his disposal by way of collection, sale, substitution, or exchange, no pledge or privilege exists as against third persons. *Id.*
4. Though in such a case the pledgee, by a real action against the pledgor or his heirs, may, under the law of Louisiana, recover possession of the thing, he cannot sustain a privilege thereon as against creditors, or against a bank receiver, or an assignee in bankruptcy, who represents them. *Id.*
5. Where it was agreed that a bank should deposit bills and notes with its president and his partner, by way of pledge to secure a loan made by a third party, and the president delivers them back to the bank officers for collection, with power to substitute other securities therefor, it is not such a delivery and possession as is necessary to create a privilege by the law of Louisiana. *Id.*
6. The ruling in *Casey* v. *Cavaroc* (*supra*, p. 467), as to what constitutes a valid pledge of securities, so far as third persons are concerned, applied to this case. *Casey* v. *National Bank*, 492.
7. Under the statute of Louisiana, relating to pledges of negotiable and other securities, which was in force in the year 1873, when the transaction in this case took place, the actual delivery of such securities was sufficient to constitute a pledge. *Casey* v. *Schneider*, 496.

POSSESSION. See *Pledge*, 1–5; *Resulting Trust*, 2.

POSSESSION, DELIVERY OF. See *Coupons*, 1; *Louisiana*, 1.

POST-OFFICES AND POST-ROADS. See *Constitutional Law*, 1–8.

1. The power vested in Congress to establish "post-offices and post-roads" embraces the regulation of the entire postal system of the country. Under it, Congress may designate what shall be carried in the mail, and what excluded. *Ex parte Jackson*, 727.
2. In the enforcement of regulations excluding matter from the mail, a distinction is to be made between what is intended to be kept free from inspection, such as letters, and sealed packages subject to letter postage, and what is open to inspection, such as newspapers, magazines, pamphlets, and other printed matter, purposely left in a condition to be examined. *Id.*
3. Letters, and sealed packages subject to letter postage, in the mail can be opened and examined only under like warrant, issued upon similar oath or affirmation, particularly describing the thing to be seized, as is required when papers are subjected to search in one's own household. The constitutional guaranty of the right of the people to be secure in their papers against unreasonable searches and seizures extends to their papers, thus closed against inspection, wherever they may be. *Id.*
4. Regulations against transporting in the mail printed matter, which is open to examination, cannot be enforced so as to interfere in any manner with the freedom of the press. Liberty of circulating is essential to that freedom. When, therefore, printed matter is excluded from the mail, its transportation in any other way as merchandise cannot be forbidden by Congress. *Id.*
5. Regulations excluding matter from the mail may be enforced through the courts, upon competent evidence of their violation obtained in other ways than by the unlawful inspection of letters and sealed packages; and with respect to objectionable printed matter, open to examination, they may in some cases also be enforced by the direct action of the officers of the postal service upon their own inspection, as where the object is exposed, and shows unmistakably that it is prohibited, as in the case of an obscene picture or print. *Id.*

PRACTICE. See *Appearance; Court and Jury*, 1–3; *Lands, Conveyance of*, 1–4; *Trustee*.

1. When the Court of Claims sends here as part of its finding all the evidence on which a fact essential to the judgment there rendered was found, from which it appears that there was no legal evidence to establish such fact, this court must, on appeal, reverse the judgment. *United States* v. *Clark*, 37.
2. Upon a writ of error to reverse a judgment by default, such defects in the declaration or complaint as could have been taken advantage of before judgment by general demurrer may be brought under review *McAllister* v. *Kuhn*, 87.

PRACTICE (*continued*).

3. If the judgment would have been arrested on motion, because the declaration did not state facts sufficient to constitute a cause of action, it may, for the same reason, be reversed upon error. *Id.*
4. As important questions of practice are likely to arise under the act of March 3, 1875 (18 Stat. 475), the decision in this case touching the removal of causes to the courts of the United States is to be considered as conclusive only upon the question directly involved and decided. *Gold-Washing and Water Company* v. *Keyes*, 199.
5. This court will consider, on a second appeal, only the proceedings subsequent to its mandate. The re-examination cannot extend to any thing decided on the first appeal. *The "Lady Pike,"* 461.
6. Where a stipulation to abide and answer the decree of the District Court in a case in admiralty is, with the consent of the parties, substituted for the stipulation previously filed by a claimant, it thereby becomes the only stipulation for value, and does not become inoperative upon an appeal to the Circuit Court. The appeal carries up the whole fund. *Id.*
7. The security required upon writs of error and appeals must be taken by the judge or justice. He cannot delegate that power to the clerk. *O'Reilly* v. *Edrington*, 724.
8. The ruling in *O'Reilly* v. *Edrington* (*supra*, p. 724), that a judge or justice cannot delegate to the clerk the power to approve the security upon writs of error and appeals, approved, and applied to this case. *National Bank* v. *Omaha*, 737.

PRE-EMPTION. See *School Lands.*

1. Under sect. 6 of the act of March 3, 1853 (10 Stat. 244), a settler upon unsurveyed public lands in California has no valid claim to pre-empt a quarter-section, or any part thereof included in his settlement, unless it appears by the government surveys, when the same are made and filed in the local land-office, that his dwelling-house was on that quarter-section. *Ferguson* v. *McLaughlin*, 174.
2. No right of pre-emption can be established by a settlement and improvement on a tract of public land where the claimant forcibly intruded upon the possession of one who had already settled upon, improved, and enclosed that tract. *Atherton* v. *Fowler*, 513.
3. Such an intrusion, though made under pretence of pre-empting the land, is but a naked, unlawful trespass, and cannot initiate a right of pre-emption. *Id.*
4. Under sect. 14 of the act of 1841 (5 Stat. 457), and the act of March 3, 1853 (10 id. 244), no pre-emption claim was of any avail against a purchaser of the land at the public sales ordered by the proclamation of the President; unless, before they commenced, the claimant had proved up his settlement and paid for the land. *Moore* v. *Robbins*, 530.
5. The decision of the Secretary of the Interior, against a purchaser at the public sales, in favor of a pre-emption claimant who had failed

PRE-EMPTION (*continued*).
to make the required proof and payment, was erroneous, as a misconception of the law, and the equitable title should be decreed to belong to the purchaser. *Id.*

PREMIUMS. See *Insurance*, 3, 7, 8, 13.

PRESUMPTION. See *Contracts*, 10; *Coupons*, 1; *Court and Jury*, 4 *Patents of the United States for Land*, 2.

PRINCIPAL AND AGENT. See *Agent*.

PRIVILEGE. See *Pledge*, 1–5.

PRIVITY. See *Contracts*, 17.

PROCESS, SERVICE OF. See *Jurisdiction*, 8.

PROPERTY. See *Constitutional Law*, 12, 13.
Debts are not property. A non-resident creditor of a city cannot be said to be, in virtue of a debt which it owes him, a holder of property within its limits. *Murray* v. *Charleston*, 432.

PROTEST OF AN IMPORTER. See *Imports, Duty on*, 26.

PUBLIC ACT, SALE BY. See *Confiscation*, 6.

PUBLIC LANDS. See *Constitutional Law*, 3, 4; *Patents of the United States for Land; Pre-emption; School Lands.*

PURCHASE-MONEY. See *Lien*.

QUARTERMASTER.
1. A quartermaster of a regiment of cavalry, who also serves as acting assistant-commissary, is entitled to the additional compensation of $100 per annum provided for by sect. 1261 of the Revised Statutes. *United States* v. *Morrison*, 232.
2. As such quartermaster receives no compensation for staff service separate from that of rank, he does not, within the meaning of the army regulations, receive pay for his staff appointment. *Id.*

RAILROAD COMPANY. See *Contracts*, 9, 10; *Corporations*, 2–5; *Illinois*.

REBELLION, THE. See *Confederate States*, 1–5; *Confiscation*.
All acts done in aid of the rebellion were illegal and void. *Dewing* v. *Perdicaries*, 193.

RECEIPT AND ACCEPTANCE OF GOODS. See *Frauds, Statute of*, 4.

RECORD. See *Court and Jury*, 4; *Jurisdiction*, 4; *Patents of the United States for Land*, 1–4.
1. Under the provisions of the act of March 3, 1877 (19 Stat. 344), the

RECORD (*continued*).

cost of printing all records in this court, after Oct. 1 in that year, which is paid by the government, must be taxed against the losing party. *Railroad Company* v. *Collector*, 594.

2. The appellee, the successful party in this court, caused the printing of the record, after said last-mentioned date, to be done at his own expense, but at a cost no greater than if the work had been done at the government printing-office. *Held*, that such cost be taxed against the appellant. *Id.*

RECORDS, EXEMPLIFICATION OF. See *Patents of the United States for Land*, 3.

RELEASE. See *Mortgage*, 3–5.

REMOVAL OF CAUSES.

1. A petition for the removal of a suit from a State court to a Federal court is insufficient, unless it sets forth in due form, such as is required in good pleading, the essential facts not otherwise appearing in the case, which, under the act of Congress, are conditions precedent to the change of jurisdiction. *Gold-Washing and Water Company* v. *Keyes*, 199.
2. A suit cannot be so removed, under the second section of the act of March 3, 1875 (18 Stat. 470), simply because, in its progress, a construction of the Constitution or a law of the United States may be necessary; unless it, in part at least, arises out of a controversy in regard to the operation and effect of some provision in that Constitution or law upon the facts involved. *Id.*
3. As important questions of practice are likely to arise under that act, this decision is to be considered as conclusive only upon the question directly involved and decided. *Id.*

REPEAL BY IMPLICATION.

A statute does not, by implication, repeal a prior one, unless there is such a positive repugnancy between them that they cannot stand together. *Arthur* v. *Homer*, 137.

RESPONDENTIA. See *Bottomry and Respondentia.*

RESULTING TRUST.

1. In Pennsylvania, a resulting trust in land, if not sought to be enforced for a period of twenty-one years, and not reaffirmed and continued, will, under ordinary circumstances, be extinguished. *King* v. *Pardee*, 90.
2. That rule is especially applicable where the party having the legal title has, during the required period of twenty-one years, been in notorious and adverse possession, paying the taxes, exercising all the usual rights of ownership, and his title has for the whole period been on record in the proper office. *Id.*

REVISED STATUTES OF THE UNITED STATES.
The following sections referred to and explained: —
Sects. 1059–1062 See *Limitations, Statute of*, 1.
Sect. 1069 See *Limitations, Statute of*, 1.
Sect. 1079. See *Witness*, 2.
Sect. 1261. See *Quartermaster*.
Sect. 2504. See *Imports, Duty on*, 11.
Sect. 3266. See *Criminal Law*, 1.
Sect. 3281. See *Criminal Law*, 5.
Sect. 5263. See *Constitutional Law*, 8.

RICHMOND, FREDERICKSBURG, AND POTOMAC RAILROAD COMPANY. See *Constitutional Law*, 12, 13.

SALE.
While it is true that it is essential to a sale that both parties should consent to it, yet the consent of the former owner need not be expressly given, but may be inferred from the circumstances of the transaction. *Ketchum* v. *Duncan*, 659.

SAVINGS BANKS. See *District of Columbia*, 1, 2.

SCHOOL LANDS.
1. The act of March 3, 1853 (10 Stat. 244), granted for school purposes to California the public lands within sections 16 and 36 in each congressional township in that State, except so much of them whereon an actual settlement had been made before they were surveyed, and the settler claimed the right of pre-emption within three months after the return of the plats of the surveys to the local land-office. If he failed to make good his claim, the title to the land embraced by his settlement vested in the State as of the date of the completion of the surveys. *Water and Mining Company* v. *Bugbey*, 165.
2. In this case, the title of the State to the demanded premises, being part of a school section, having become absolute May 19, 1866, a mining company could, under the act of July 26, 1866 (14 Stat. 253), acquire no right to them. *Id.*

SECRETARY OF THE INTERIOR. See *Pre-emption*, 5.

SECURITY UPON WRITS OF ERROR AND APPEALS. See *Practice*, 7, 8.

SEIZURE. See *Confiscation*, 1, 4.

SEQUESTRATION. See *Confederate States*, 6; *Confiscation*, *Constitutional Law*, 9.

SETTLER. See *Pre-emption*, 4.

SIDEWALKS. See *Contracts*, 12–16.

SILK LACES. See *Imports, Duty on*, 5.

SILK PLAITED GLOVES. See *Imports, Duty on*, 9, 10.

SILK VEILS. See *Imports, Duty on*, 1, 3.

SIMILITUDE CLAUSE ACT OF AUGUST 30, 1842. See *Imports, Duty on*, 15.

SOVEREIGNTY. See *Fraud*, 2.

SPECIAL IMPROVEMENTS. See *Contracts*, 12–16.

SPECIAL TAX. See *Municipal Bonds*, 9.

SPECIFIC DESIGNATION. See *Imports, Duty on*, 23.

SPECIFIC PERFORMANCE.

A. made his will appointing C. his executor, and devising his real property in South Carolina to B. for life; and, after the determination of that estate, to C., in trust, to support certain contingent remainders in fee. A. afterwards entered into a contract to sell the property to D., who entered into possession, and paid a part of the purchase-money. A. died without receiving the balance or making a conveyance, and C. duly qualified as his executor. *Held*, that a bill by B. against C. and D., to compel the specific performance of the contract, would lie. *Bissell* v. *Heyward*, 580.

SPECIFIED QUANTITY. See *Contracts*, 4–8.

SPECTACLES. See *Imports, Duty on*, 16.

STATE COURTS. See *Injunction; Jurisdiction*, 8; *Removal of Causes*

STATUTE OF FRAUDS. See *Frauds, Statute of.*

STATUTE OF LIMITATIONS. See *Limitations, Statute of.*

STATUTES, CONSTRUCTION OF. See *Corporations*, 2–5.

A well-known rule of statutory construction remains in force until it shall be abolished by Congress. *Arthur* v. *Morrison*, 108.

STATUTES OF THE UNITED STATES. See *Revised Statutes of the United States.*

The following, among others, referred to, commented on, and explained: —

1792. May 2. See *Imports, Duty on*, 13.
1841. Sept. 4. See *Pre-emption*, 4.
1842. Aug. 30. See *Imports, Duty on*, 15, 17, 18.
1843. March 3. See *Patents of the United States for Land*, 3.
1853. March 3. See *Pre-emption*, 1, 4; *School Lands*, 1.
1861. March 2. See *Imports, Duty on*, 6, 10, 11, 19, 21, 27.
1862. July 14. See *Imports, Duty on*, 6, 10, 11, 17, 19, 21.
1862. July 17. See *Confiscation*, 1, 4.
1862. July 17. See *Criminal Law*, 6.
1864. June 30. See *Imports, Duty on*, 1, 4, 9, 12, 14, 16, 21, 22, 24, 27, 28.
1864. July 2. See *Witness*, 2.
1866. July 24. See *Constitutional Law*, 3.

STATUTES OF THE UNITED STATES (*continued*).
1866. July 26. See *School Lands*, 2.
1867. March 2. See *Imports, Duty on*, 27.
1870. May 24. See *District of Columbia*, 1.
1872. June 6. See *Imports, Duty on*, 14, 24.
1875. Feb. 8. See *Imports, Duty on*, 3.
1875. March 3. See *Practice*, 4; *Removal of Causes*, 2.
1877. March 3. See *Record*, 1.

STOCK, TRANSFER OF. See *Bankruptcy*, 1; *Confederate States*, 6.

SUBSCRIPTION TO STOCK, TRANSFER OF. See *Municipal Bonds* 17.

SUPERSEDEAS. See *Appeal*, 3.
The refusal of the Circuit Court to accept a *supersedeas* bond, when offered during the term at which the decree was rendered does not take from a judge of that court, or a justice of this court, the power to approve one thereafter. *Sage* v. *Railroad Company*, 712.

SURVEYS. See *Pre-emption*.

TAXATION. See *Constitutional Law*, 8, 11; *Corporations*, 2–5; *Debts*, 1; *Illinois*; *Municipal Bonds*, 9.

TELEGRAPHING AND TELEGRAPH LINES. See *Constitutional Law*, 3–6.

TENDER. See *Contracts*, 1, 2.
A tender of payment must, to stop interest or costs, be kept good. It ceases to have that effect when the money is used by the debtor for any other purpose. *Bissell* v. *Heyward*, 580.

TENNESSEE. See *Constitutional Law*, 8.

TEXAS, CONSTITUTION OF.
The twelfth section of the act of the legislature of Texas, entitled "An Act to incorporate the San Antonio Railroad Company," which authorizes the city of San Antonio to subscribe for the stock of said company, and issue bonds to pay for the same, is not repugnant to the provision of the State Constitution of 1845, requiring that "every law enacted by the legislature shall contain but one object, and that shall be expressed in the title." *San Antonio* v. *Mehaffy*, 312.

TEXT-BOOKS. See *Court and Jury*, 3.

THREAD LACES. See *Imports, Duty on*, 5, 6.

TITLE. See *Confiscation*, 4–7; *Coupons*, 1; *Louisiana*, 2; *Patents of the United States for Land*, 1–4; *School Lands*.

TOLLS. See *Grant*, 1–4.

TRADE-MARKS.

1. Where a manufacturer has habitually stamped his goods with a particular mark or brand, a court of equity will restrain another party from adopting it for the same kind of goods. *McLean* v. *Fleming*, 245.
2. Positive proof of fraudulent intent on the part of the infringer is not required where the infringement is clearly shown. *Id.*
3. Although no precise rule, applicable to all cases, can be laid down as to the degree of resemblance necessary to constitute an infringement of a trade-mark, an injunction will be granted where the imitation is so close, that, by the form, marks, contents, words, or their special arrangement, or by the general appearance of the infringing device, purchasers exercising ordinary caution are likely to be misled into buying the article bearing it for the genuine one. *Id.*
4. It is not necessary, to entitle a party to an injunction, that a specific trade-mark has been infringed. It is sufficient to satisfy the court that the respondent intended to represent to the public that his goods were those of the complainant. *Id.*
5. In this case, the court holds that the appellant has infringed the trade-mark of the appellee; but that the latter, by his long-continued acquiescence therein, and his unreasonable delay in seeking relief, has been guilty of inexcusable laches, and is not entitled to an account for profits. The decree below is therefore affirmed, so far as it awards an injunction, but reversed as to damages; and costs in this court are allowed to the appellant. *Id.*

TREASURY OF THE UNITED STATES. See *Fraud.*

TRESPASS. See *Pre-emption*, 3.

TRUSTEE.

Bill in chancery, praying for the removal of the defendant as the trustee in a deed made to secure to the complainant the payment of a bond in the defendant's possession, and for the delivery of the bond. The defendant asserts a lien on the bond for legal services rendered to the complainant. *Held*, 1. That while a state of mutual ill-will or hostile feeling may justify a court in removing a trustee, in a case where he has a discretionary power over the rights of the *cestui que trust*, and has duties to discharge which necessarily bring the parties into personal intercourse with each other, it is not sufficient cause where no such intercourse is required and the duties are merely formal and ministerial, and no neglect of duty or misconduct is established against him. 2. A contract to pay to an attorney-at-law for his services in suits concerning land, if it be recovered, a specific sum of money out of the proceeds, when it shall be sold by the client, is not champertous, because he neither pays costs nor accepts the land, or any part of it, as his compensation. 3. Nor is it void under the Statute of Frauds, because not in writing; for it may be per-

TRUSTEE (*continued*).

formed within the year. 4. The land having been recovered, and by the owner sold for $38,000, for which a bond was taken, and left with the attorney, the latter has a lien on the bond for money due him for his services as such. 5. Where, under the circumstances mentioned, the client brings a bill in chancery for the removal of the attorney from his position as trustee in the deed to secure the purchase-money, and for the delivery of the bond, it is the duty of the court to decide on the existence and amount of the lien set up in the answer, and to decree such delivery on payment of the amount of the lien, if one be found to exist. 6. Though the defendant, by neglecting to file a cross-bill, can have no decree for affirmative relief, it is proper for the court to establish the condition on which the delivery of the bond to the complainant, according to the prayer of the bill, should be made, and to require such delivery on the performance of that condition. *McPherson* v. *Cox*, 404.

TRUST-FUND.

Where a trust-fund has been perverted, the *cestui que trust* can follow it at law as far as it can be traced. *United States* v. *State Bank*, 80.

ULTRA VIRES. See *Contracts*, 9, 10, 14.

The doctrine of *ultra vires*, when invoked for or against a corporation, should not be allowed to prevail, where it would defeat the ends of justice or work a legal wrong. *Railway Company* v. *McCarthy*, 258.

UNSURVEYED LANDS IN CALIFORNIA. See *Pre-emption; School Lands*, 1.

USURY.

Suit by a national bank upon a bill of exchange. Defence, usury. The bank, in discounting the bill, reserved a greater amount than was allowed for interest by the law of the State where it was situated. There was no proof of the current rate of exchange. *Held*, that the bank was entitled to recover. *Wheeler* v. *National Bank*, 268.

UTAH, CODE OF PRACTICE OF.

By the Code of Practice of Utah, the failure of a defendant to appear at the time of the assessment of damages against him by the court is a waiver by him of an assessment by a jury. *McAllister* v. *Kuhn*, 87.

VALUE, STIPULATION FOR. See *Practice*, 6.

WAIVER. See *Insurance*, 4–8.

WARRANTY. See *Contracts*, 4.

WITNESS.

1. At common law, a party to a suit is a competent witness to prove the contents of a trunk or package, which, by other testimony, is shown to have been lost or destroyed under circumstances that render some one liable for the loss. *United States* v. *Clark*, 37.

WITNESS (*continued*).

2. Sect. 1079 of the Revised Statutes was intended to do no more than to restore in the Court of Claims the common-law rule excluding parties as witnesses, which had been abolished by the act of July 2, 1864 (13 Stat. 351); and hence the petitioner in this case is a competent witness to prove the contents of a package of government money taken from his official safe by robbers. *Id.*
3. The petitioner being competent, neither his testimony before the court-martial which convicted the robbers, nor his report of the loss to his superior officer, is admissible as independent or orginal evidence, though it might be proper as corroborative of his own testimony. *Id.*
4. Where a witness testifies, in his direct examination, to a purchase made by him, it is competent on cross-examination to ask him whether his contract was in writing; and, if it was, to identify the paper. *Gregory* v. *Morris*, 619.

WORDS.

"About." See *Contracts*, 4–6.
"Knowingly and Wilfully." See *Distilling*, 2, 3.
"More or Less." See *Contracts*, 4–6, 8.
"Taking." See *Constitutional Law*, 13.
"Utter Loss." See *Bottomry and Respondentia*, 1.
"Voyage or Voyages." See *Contracts*, 3.

WRONGFUL CONVERSION, ACTION FOR. See *Pleading*, 1.

Stanford Law Library
3 6105 06 166 984 7